This is a digital copy of a book that was preserved for generations on library shelves before it was carefully scanned by Google as part of a project to make the world's books discoverable online.

It has survived long enough for the copyright to expire and the book to enter the public domain. A public domain book is one that was never subject to copyright or whose legal copyright term has expired. Whether a book is in the public domain may vary country to country. Public domain books are our gateways to the past, representing a wealth of history, culture and knowledge that's often difficult to discover.

Marks, notations and other marginalia present in the original volume will appear in this file - a reminder of this book's long journey from the publisher to a library and finally to you.

Usage guidelines

Google is proud to partner with libraries to digitize public domain materials and make them widely accessible. Public domain books belong to the public and we are merely their custodians. Nevertheless, this work is expensive, so in order to keep providing this resource, we have taken steps to prevent abuse by commercial parties, including placing technical restrictions on automated querying.

We also ask that you:

+ *Make non-commercial use of the files* We designed Google Book Search for use by individuals, and we request that you use these files for personal, non-commercial purposes.
+ *Refrain from automated querying* Do not send automated queries of any sort to Google's system: If you are conducting research on machine translation, optical character recognition or other areas where access to a large amount of text is helpful, please contact us. We encourage the use of public domain materials for these purposes and may be able to help.
+ *Maintain attribution* The Google "watermark" you see on each file is essential for informing people about this project and helping them find additional materials through Google Book Search. Please do not remove it.
+ *Keep it legal* Whatever your use, remember that you are responsible for ensuring that what you are doing is legal. Do not assume that just because we believe a book is in the public domain for users in the United States, that the work is also in the public domain for users in other countries. Whether a book is still in copyright varies from country to country, and we can't offer guidance on whether any specific use of any specific book is allowed. Please do not assume that a book's appearance in Google Book Search means it can be used in any manner anywhere in the world. Copyright infringement liability can be quite severe.

About Google Book Search

Google's mission is to organize the world's information and to make it universally accessible and useful. Google Book Search helps readers discover the world's books while helping authors and publishers reach new audiences. You can search through the full text of this book on the web at `http://books.google.com/`

Stanford University Libraries
3 6105 127 786 163

926

THE

EXECUTIVE DOCUMENTS,

PRINTED BY ORDER OF

THE SENATE OF THE UNITED STATES,

FIRST SESSION, THIRTY-FIFTH CONGRESS,

AND SPECIAL SESSION OF 1858.

1857-'58.

IN SIXTEEN VOLUMES.

Volume 1 contains No. 1 to No. 16 inclusive, except No. 11 parts 1, 2, 3, and 4.
Volume 2 contains No. 11 part 1.
Volume 3 contains No. 11 part 2.
Volume 4 contains No. 11 part 3.
Volume 5 contains No. 11 part 4, maps.
Volume 6 contains No. 17 to No. 19 inclusive.
Volume 7 contains No. 20 to No. 35, except No. 30 parts 1, 2, 3, and 4, and No. 33.
Volume 8 contains No. 30 part 1.
Volume 9 contains No. 30 part 2.
Volume 10 contains No. 30 part 3.
Volume 11 contains No. 30 part 4.
Volume 12 contains No 36 to No. 57, except No. 53.
Volume 13 contains No. 58 to No. 73, and No. 1 special session, at the end thereof.
Volume 14 contains Report on Commerce and Navigation.
Volume 15 contains No. 33, in quarto.
Volume 16 contains No. 53, in quarto.

WASHINGTON:
WILLIAM A. HARRIS, PRINTER
1858.

LIBRARY
OF THE
LELAND STANFORD JUNIOR
UNIVERSITY.

A. 1890

INDEX

TO

THE EXECUTIVE DOCUMENTS

OF THE

SENATE OF THE UNITED STATES.

Subject.	Vol.	No.	Page.
A.			
Academy during the past year. Statement of the amount expended for the support of the Military	7	23	1
Academy at West Point, accompanying the President's annual message, (part 2) Reports of the Superintendent and Board of Visitors of the Military	3	11	197
Academy at Annapolis, accompanying the President's annual message, (part 3.) Report of the Board of Examiners of the Naval	4	11	593
Accounts of the Treasurer of the United States for the 3d and 4th quarters of 1856, and 1st and 2d quarters of 1857. Statement of the	6	19	1
Adjournment of Congress. Message of the President setting forth the condition of the treasury, and recommending a postponement of the day of	13	68	1
Adjutant General of the army, accompanying the President's annual message, (part 2) Report of the	3	11	58
(*See list of documents accompanying the above at page* 94 *of same.*)			
African slave trade. (See *Slave trade*)			
Agriculture, &c., for the year ending December 31, 1857, (part 4.) Report of the Commissioner of Patents on the subject of	11	30	1
American seamen. (See *Seamen.*)			
American commerce (See *Commerce.*)			
American vessels. (See *Vessels.*)			
Appropriations for the service of the Department of the Interior for the fiscal year ending June 30, 1857. Statement of	1	6	1
Appropriations for the Navy Department, viz: balances of appropriations July 1, 1856; appropriations, repayments, and transfers; the amount applicable to the service of, and the amounts drawn by requisition from the treasury in the year 1856–'57; and the balances on the 30th June, 1857, with the sums specially designated that have been carried to the surplus fund, accompanying the President's annual message, (part 3.) Statement of	4	11	952
Appropriations for the War Department, viz: balances of appropriations on July 1, 1856; appropriations for fiscal year 1856–'57; repayments from July 1, 1856, to June 30, 1857; amounts applicable to the service of the fiscal year 1856–'57; amounts drawn by requisitions from the treasury during the fiscal year 1856–'57; and balances on June 30, 1857. Statement of Second Comptroller of	7	29	3

Subject.	Vol.	No.	Page.
Aqueduct, accompanying the President's annual message, (part 2.) Report of the operations upon the Washington	3	11	225
Arkansas. Annual report of the surveyor general of	2	11	159
Armories, and the number of arms and appendages made and altered thereat during the year ending June 30, 1857. Statement of the expenses of the	12	41	1
Armories and arsenals during the year ending June 30, 1857, (part 2, President's message.) Statement of the principal operations of the	3	11	547
Army during the year 1857. Report, accompanying the President's annual message, part 2, of the condition and operations of the	3	11	1
Army, (President's message, part 2.) Annual report of the Commanding General on the general condition and wants of the	3	11	48
Army, (President's message, part 2.) Annual report of the Adjutant General of the	3	11	58
(*See list of documents accompanying the above at page* 94 *of same.*)			
Army, (President's message, part 2.) Annual report of the Quartermaster General of the	3	11	153
Army, (President's message, part 2.) Annual report of the Commissary General of the	3	11	161
Army, accompanying President's message, part 2. Annual report of the Surgeon General of the	3	11	165
Army, accompanying the President's annual message, part 2. Report of the Chief Engineer of the	3	11	168
Army, accompanying the President's annual message, part 2. Report of the Chief Topographical Engineer of the	3	11	283
Army, accompanying the President's annual message, part 2. Report of the Chief of Ordnance of the	3	11	535
Army officers belonging to the several regiments in service in the field, or at remote or frontier stations, are now absent from duty, and the cause of such absence in each case. Statement showing what	12	39	1
Arsenals and armories during the year ending June 30, 1857, accompanying the President's annual message, (part 2.) Statement of the principal operations of the.	3	11	547
Arts and manufactures for the year 1857, (part 1.) Report of the Commissioner of Patents on the subject of	8	30	1
Arts and manufactures for the year 1857, (part 2.) Report of the Commissioner of Patents on the subject of	9	30	1
Arts and manufactures for the year 1857, (part 3.) Report of the Commissioner of Patents on the subject of	10	30	1
Attorney General of the United States in relation to the legality of the seizure of the American vessels "Georgiana" and "Lizzie Thompson" by the Peruvian war steamer "Tumbes" while taking in cargoes of guano purchased of Vivanco, or his agents, during the struggle between Vivanco and Castillo. Opinion of the	13	69	27
Auditor on the operations of his office for 1857. Report of the First	1	1	151
Auditor on the operations of his office for 1857. Report of the Second	1	1	153
Auditor on the operations of his office for 1857. Report of the Third	1	1	154
Auditor on the operations of his office for 1857. Report of the Fourth	1	1	162
Auditor on the operations of his office for 1857. Report of the Fifth	1	1	163
Auditor on the operations of his office for 1857. Report of the Sixth	1	1	165

Subject.	Vol.	No.	Page.
Auditor of the Treasury, from July 1, 1856, to June 30, 1857, inclusive, accompanying the President's annual message, part 3. Abstract of expenditures under the head of "contingent expenses," settled and allowed at the office of the Fourth	4	11	956
Auditor of the Post Office Department of the receipts and expenditures of the Post Office Department, together with the operations of his office in connexion therewith, for the fiscal year ending June 30, 1857. Report of the	4	11	1083
Auditor of the Treasury of the United States communicating copies of accounts of persons charged with the disbursement or application of moneys, goods, or effects, for the benefit of the Indians, during the year ending June 30, 1857, together with a list of the names of persons to whom goods, moneys, or effects have been delivered during that period. Letter of the Second	7	20	1
B.			
Beale's exploration for a wagon-road from Fort Defiance, in New Mexico, to the western borders of California. Report of E. F.	12	43	1
Bills by Congress at so late a period of the session as not to give him sufficient time to examine them. Remonstrance of the President against the passage of	13	68	2
Blythe island, in the State of Georgia. Report in regard to measures taken to establish a naval depot on	12	57	1
Boundary line between the United States and Mexico. Report in relation to the progress of the Report of Major Emory of the Survey of the	12	37	1
Bremen, in relation to alleged claims for losses sustained by subjects of the Hanse Towns at the bombardment of Greytown. Correspondence with the ministers of	1	10	1
Bridge. Report of the engineer in charge of the Little Falls	2	11	774
Brig Macedonian. (See *Macedonian*)			
British authorities at the Island of Jamaica. Report of the reception and humane treatment of the officers and crew of the American ship Susquehanna, who were sick with the yellow fever, by the	12	48	1
British ship-of-war on the coast of Africa. Correspondence relating to the seizure of the American barque Panchita, by a	13	61	1
Browne, on the late Indian war in the Territories of Washington and Oregon. Report of J. Ross	12	40	1
Bullion imported and exported annually from 1821 to 1857, amount of importation over exportation, and of exportation over importation, during the same years. Statement of the amount of coin and	1	1	274
Bureau of Explorations and Surveys, embracing the subject of sinking artesian wells on the public lands, surveys for military defences, and the exploration of the Colorado west, (President's message, part 2.) Report of the	3	11	38
Bureau of Yards and Docks, accompanying the President's annual message, (part 3.) Report and detailed estimates of the	4	11	623
Bureau of Ordnance and Hydrography, including those of the Naval Observatory and Naval Academy, accompanying the President's annual message, (part 3.) Report and detailed estimates of the	4	11	791
Bureau of Construction, Equipment, and Repairs, accompanying the President's annual message, (part 3) Report and detailed estimates of the	4	11	802
Bureau of Provisions and Clothing, accompanying the President's annual message, (part 3.) Report and detailed estimates of the	4	11	900

(*See list of papers accompanying the above, at page* 904 *of the same*)

Subject.	Vol.	No.	Page.
Bureau of Medicine and Surgery, accompanying the President's annual message, (part 3.) Report and detailed estimates of the	4	11	927
Bureau of Yards and Docks. List of contracts for furnishing naval supplies under the cognizance of the	12	44	1
C.			
California. Annual report of the surveyor general of	2	11	221
California. Exploration of a route for a wagon-road from Fort Defiance, in New Mexico, to the western borders of	12	43	1
Canada is authorized to make and receive on goods or articles imported into the United States from that place. Report of the Secretary of the Treasury in relation to the fees or charges that the consul general of	13	71	1
Canal. Report on the condition of the Louisville and Portland	1	1	149
Capitol extension, reconstruction of dome, and post office extension, (President's message, part 2) Report of Captain Meigs, engineer in charge of	3	11	40
Chile, of the proceeds of the cargo of the brig Macedonian, the property of citizens of the United States. Correspondence relative to the seizure by the authorities of	13	58	1
Chief engineer. (See *Engineer—army.*)			
Chief Topographical Engineer. (See *Engineer—army.*)			
China, relating to the consular courts of the United States of America in China. Letter from the commissioner of the United States in	1	5	1
China. Copy of instructions given to Mr. Reed, commissioner of the United States to	12	47	1
Chorpenning, jr., surviving partner of Woodward & Chorpenning, mail contractors. Settlement of the claim of George	4	11	984
Circular instructions. (See *Treasurer.*)			
Claiborne, special agent appointed to collect statistics on the consumption of cotton in Europe. Report of John	7	35	1
Coal depot for naval purposes at Key West, Florida, accompanying President's annual message, (part 3) Report of the superintending engineer of the	4	11	596
Coast survey, (in quarto.) Annual report on the	15	33	1
Coasting trade from 1815 to 1857. Enrolled and licensed tonnage employed in the	14	------	632
Cod fishery. (See *Fishery*)			
Coin and bullion. (See *Imported—exported*)			
Coinage at the United States mint annually from its establishment in 1792, and including the coinage of the branch mints and the assay office, (New York,) from their organization, to September 30, 1857. Amount of gold and silver	1	1	272
Coinage at the mint of the United States, branches, and assay office, during the first six months of 1857 ; report of the director, with explanatory tables. Statement of the amount of	1	1	46
Collection districts. (See *Imported—exported*)			
Columbia Institution for the Deaf and Dumb and Blind, (part 1.) Report of the President of the	2	11	744
Commandant of the marine corps. (See *Marine corps.*)			
Commanding general of the army. (See *Army.*)			
Commerce and navigation of the United States, for the year ending 30th June, 1857. Report with statements of the	14	------	1
Commerce of the United States, &c. Statistical view of the	14	------	510
Commerce of each State and Territory of the United States, &c. Statistical view of the	14	------	514
Commerce in the ports of Mexico. Correspondence in relation to measures adopted to protect American	12	56	1

Subject.	Vol.	No.	Page.
Commercial relations, (in quarto.) Report of the Secretary of State on	16	53	1
Commissary General of the army. (See *Army*.)			
Commissioner of Customs on the operations of his office during the past year. Report of the	1	1	174
Commissioner of the General Land Office, accompanying the annual message of the President, showing the operations of the General Land Office, for the fiscal year ending June 30, 1857, and for the quarter ending September 30, 1857, (part 1.) Report of the	2	11	78
Commissioner of Patents, for the year 1857, on Agriculture, Arts, and Manufactures, (parts 1, 2, 3, 4.) Annual report of	8, 9, 10, 11	30	1
Commissioner of Indian Affairs, with accompanying reports and statements from the several superintendents, agents, and teachers. Annual report of the	2	11	289
(*For accompanying papers, see page* 301.)			
Commissioner of Pensions. Annual report of the	2	11	698
Commissioner of Public Buildings. Annual report of the	2	11	718
Commissioner to China. Copy of instructions given to Mr. Reed	12	47	1
Comptroller of the Treasury of appropriations applicable to the Interior Department viz: Showing the balances of appropriations for 1856; the appropriations for 1856-57; repayments and transfers; amounts applicable to the service, and drawn by requisitions from the treasury, for the year 1856-'57; balances on the 30th June, 1857, with such appropriations as have been carried to the surplus fund. Statement of the Second	1	6	1
Comptroller of the Treasury of appropriations applicable to the War Department, during the fiscal year 1856-'57; the amount drawn by requisitions; the balances on the 1st July, 1857, and such appropriations as have been carried to the surplus fund. Statement of the Second	7	29	1
Comptroller of the Treasury accompanying the President's annual message, (part 3,) with a statement of appropriations for the Navy Department, viz: Balances of appropriations on July 1, 1856; appropriations; repayments and transfers; amount applicable to the service; and amounts drawn from the treasury by requisitions during the year 1856-'57; and the balances on the 30th June, 1857, with the sums specially designated that have been carried to the surplus fund. Report of the Second	4	11	952
Comptroller showing the operations of his office during the past year. Report of the First	1	1	170
Comptroller showing the operations of his office during the past year Report of the Second	1	1	171
Construction, Equipment, and Repair. (See *Bureau of Construction, &c.*)			
Contingent fund of the House of Representatives. Letter of the Secretary of the Treasury to the First Auditor, respecting the	1	1	82
Consul General. (See *Canada.*)			
Contingent expenses of foreign intercourse for the year ending Nov. 30, 1857. Statement of	1	2	30
"Contingent expenses," settled and allowed at the office of the Fourth Auditor of the Treasury from July 1, 1856, to June 30, 1857, accompanying President's annual message, (part 3.) Abstract of expenditures, under the head of	4	11	956
Contingent expenses of the War Department for the year ending June 30, 1857. Statement of expenditures for	6	18	1

Subject.	Vol.	No.	Page.
Contracts made under the cognizance of the Bureau of Yards and Docks since the last report under act of April 21, 1808, accompanying the President's annual message, (part 3.) List of	4	11	696
Contracts made under the cognizance of the Bureau of Construction, Equipment, and Repair, from October 15, 1856, to November 19, 1857, accompanying the President's annual message, (part 3.) List of	4	11	845
Contracts made under the authority of the War Department during the year 1857. Statement of	7	31	1
Contract made with Russell, Majors & Waddell for beef cattle; and also a statement of contracts made by the department, or under its authority, during the present session of Congress, in connexion with the Utah expedition, without public notice. Copy of a	12	46	1
Cotton in Europe. Report of John Clairbone, esq., special agent appointed to collect statistics on the consumption of	7	35	1
Court-houses, &c. Report on the construction of	1	1	90
Custom-houses, &c. Report on the construction of	1	1	90
Customs each year, and the expenses of collection during the same period. Statement of the amount of importations annually, from July 1, 1849, to 1857; the amount of	1	1	38
Customs in the Pacific ports from July 1, 1850, to June 30, 1857	1	1	40
Customs, on the operations of his office during the past year. Report of the Commissioner of	1	1	174
D.			
Deaf and dumb and blind. Report of the President of the Columbia Institution for the	2	11	744
Deaths and dismissals in the navy. (See *Navy*.)			
Debt, on the 1st July, 1857; the amount paid and redeemed since, and the amout outstanding November 17, 1857. Statement of the amount of public	1	1	41
Debt, on the 3d March, 1857; the amount redeemed and paid to July 1, 1857; the amount since, and the total amount outstanding November 17, 1857. Statement of the amount of the public	1	1	42
Denmark, for the discontinuance of the Sound dues. Copy of a convention between the United States and his Majesty the King of	7	28	1
Dickson, an American citizen, residing at Jaffa, in Palestine. Report concerning the outrages lately committed against the family of Mr	12	54	1
Disbursing agents. (See *Penn—La Sere*.)			
Disbursing officers and disbursing agents employed under the direction of the Treasury Department. Circular instructions to the	1	1	79
E.			
Emigrants, arising from the practice of contracting with irresponsible parties in Europe for American inland passage tickets. Copies of correspondence with, and dispatches from American ministers at the courts of England, France, Switzerland, and other powers, on the subject of the dangers to	7	26	1
Emory on the United States and Mexican Boundary Survey. Report in relation to the progress of the Report of Major	12	37	1
Engineer in charge on the construction of custom-houses, court-houses, post offices, marine hospitals, and other public buildings confided to the charge of the Treasury Department. Report of the	1	1	90

Subject.	Vol.	No.	Page.
Engineers, with an estimate for the erection of a fort at New Inlet, North Carolina. Report of the Colonel of	1	7	1
Engineer in charge of the Little Falls bridge. Report of the	2	11	774
Engineer, accompanying the President's annual message, (part 2.) Report of the Chief	3	11	168
Engineer, accompanying the President's annual message, (part 2.) Report of the Chief Topographical	3	11	283
England. (See *Great Britain.*)			
Estimate for a fort at New Inlet, North Carolina	1	7	1
Estimate for the office of Commissioner of the General Land Office for year ending June 30, 1859	2	11	114
Estimate under military bounty act of March 3, 1855	2	11	114
Estimate to meet contingent expenses of the office of Commissioner of the General Land Office for fiscal year ending June 30, 1859	2	11	115
Estimate for surveying department for fiscal year ending June 30, 1859	2	11	115
Estimate for surveying the public lands for the year ending June 30, 1859	2	11	117
Estimate for surveying department to supply deficiencies for the years ending June 30, 1856 and 1857	2	11	118
Estimate for the support of the office of the Secretary of the Navy for the fiscal year ending June 30, 1859, (part 3)	4	11	621
Estimates of Bureau of Yards and Docks, (part 3)	4	11	623
Estimate (detailed) of Bureau of Ordnance and Hydrography, including those of Naval Observatory and Naval Academy, (part 3)	4	11	791
Estimates (detailed) of Bureau of Construction, Equipment and Repair, (part 3)	4	11	802
Estimates (detailed) of Bureau of Provisions and Clothing, (part 3)	4	11	900
Estimates (detailed) of Bureau of Medicine and Surgery, (part 3)	4	11	927
Estimates (detailed) from the paymaster and quartermaster of the marine corps, (part 3)	4	11	938 941
Estimate (general) of the office of Secretary of the Navy, and the several bureaus of the department, (part 3)	4	11	944
Estimate (general) of the southwest executive building, (part 3)	4	11	944
Estimates (summary) for the navy, the marine corps, and special objects, (part 3	4	11	945
Estimate (general) for the support of the navy, (part 3)	4	11	948
Estimate (general) for the support of the marine corps, (part 3)	4	11	949
Estimate (general) for special objects under the Navy Department, (part 3)	4	11	950
Estimates for the improvement of certain harbors on Lake Erie	1	15	1
Estimates for the improvement of rivers and harbors in the State of New York	1	16	1
Executive departments during the last five years. Statements of the amount paid for printing for the	12	50	1
Expenses of the armories, and of the number of arms and appendages made and altered thereat, during the year ending June 30, 1857. Statement of the	12	41	1
Expenses of the State Department for the year ending June 30, 1857, including expenses of foreign intercourse for the year ending November 30, 1857. Statement of contingent	1	2	2 30
Expenditures, under the head of "contingent expenses," settled and allowed at the office of Fourth Auditor of the Treasury from July 1, 1856, to June 30, 1857, inclusive, accompanying President's annual message, (part 3.) Abstract of	4	11	956
Expenditures of the Post Office Department for the fiscal year ending June 30, 1857. Statement of the revenue and	4	11	965
Expenditures and receipts of the Post Office Department, and the operations of the Auditor's office connected therewith, for the year ending June 30, 1857. Report of	4	11	1083

Subject.	Vol.	No.	Page.
Expenditures for contingent expenses of the War Department, its offices and bureaus, during the year ending June 30, 1857. Statement of	6	18	1
Expenditures for the support of the Military Academy during the past year. Statement of	7	23	1
Expenditures and receipts for the year ending June 30, 1857. Statement of	1	1	33
Expenditures and receipts for the quarter ending September 30, 1857	1	1	38
Explorations and Surveys embracing the subject of sinking artesian wells on the public lands; surveys for military defences, and the exploration of the Colorado west, accompanying the President's annual message, (part 2.) Report of the Bureau of	3	11	38
Exploration of E. F. Beale for a wagon road from Fort Defiance, in New Mexico, to the western borders of California. Report of an	12	43	1
Exploring and surveying expedition to the North Pacific ocean and China seas, and also of the results of the United States naval expedition to the La Plata river. Report in relation to the publication of the results of the United States naval	12	52	1
Exportations from and importations into the United States of certain articles during the quarter ending September 30, 1857	1	1	38
Exported annually from 1821 to 1857; also the amount of importation over exportation and of exportation over importation during the same years. Statement of the amount of gold and bullion imported and	1	1	274
Exports and imports from the beginning of the government to June 30, 1857. Statement of the gross value of	1	1	275
Exported to foreign countries from June 30, 1845 to June 30, 1857 Statement of the value of manufactured articles of domestic produce	1	1	282
Exports, exclusive of specie, and the tonnage employed during each fiscal year from 1821 to 1857. Statement of the value of foreign and domestic	1	1	285
Exports of domestic produce, &c., of the United States, annually, from 1847 to 1857. Summary view of the	2	8	7
Exported, commencing on the 1st day of July, 1856, and ending on the 30th day of June, 1857. General statement of the quantity and value of goods, wares and merchandise, of the growth, produce and manufacture of the United States	14	------	8
Exports of the growth, produce and manufacture of the United States during the year ending June 30, 1857. Summary statement of the value of the	14	------	52
Exported from the United States during the fiscal year ending June 30, 1857. General statement of goods, wares and merchandise, of the growth, produce and manufacture of foreign countries	14	------	56
Exported from the United States during the fiscal year ending June 30, 1857. Summary statement of goods, wares and merchandise, of the growth, produce and manufacture of foreign countries	14	------	142
Exported from each collection district during the year ending June 30, 1857. General statement of the quantity and value of goods, wares and merchandise, of the growth, produce and manufacture of the United States	14	------	284
Exported from each collection district of the United States during the fiscal year ending June 30, 1857. General statement of goods, wares and merchandise, of the growth, produce and manufacture of foreign countries	14	------	328

Subject.	Vol.	No.	Page.
Exports to and imports from each foreign country, and the tonnage of American and foreign vessels arriving from and departing to each foreign country, during the year ending June 30, 1857. Statistical view of the commerce of the United States, exhibiting the value of	14	------	510
F.			
Fifth Auditor. (See *Auditor.*)			
Finances for the year ending June 30, 1857. Report of the Secretary of the Treasury on the state of the	1	1	1
Finances of the government and the necessity of negotiating a loan to meet its demands. Report relative to the present condition of the	13	60	1
First Auditor. (See *Audit r.*)			
First Comptroller. (See *Comptroller.*)			
Fishery; also the proportion of the enrolled and licensed tonnage employed in the coasting trade, cod fishery, mackerel fishery and whale fishery, from 1815 to 1857. Comparative view of the registered and enrolled tonnage of the United States, showing the tonnage employed in the whale	14	------	632
Florida, (part 1.) Annual report of the surveyor general of	2	11	218
Foreign vessels. (See *Vessels.*			
Foreign mail. (See *Mail.*)			
Foreign merchandise. (See *Imported.*)			
Fort at New Inlet, North Carolina. Estimate of the necessary appropriation to erect a	1	7	1
Fort Crawford. Report in relation to the sale of the military reservation at	12	45	1
Fourth Auditor. (See *Auditor.*)			
France, relating to claims for losses by the subjects of those countries at the bombardment of Greytown. Correspondence between the Secretary of State and the ministers of England and	1	9	1
France, (part 3.) Copy of a postal convention between the United States and	4	11	1022
France, (part 3.) Mail arrangements between the United States and	4	11	1028
Funds. Statement of amount of stock held in trust for Indians, the Smithsonian Institution, and balances of other trust	1	1	270 271
G.			
Geary, late governor of the Territory of Kansas, not before communicated to Congress. Copies of correspondence of John W	6	17	1
General Land Office. (See *Land Office.*)			
Geological exploration from Fort Leavenworth to Bryan's Pass, made in connexion with the survey of a road from Fort Riley to Bridger's Pass, under the command of Lieut. Bryan, 1856, by H. Engelman, geologist and mining engineer, accompanying the President's annual message, (part 2.) Report of a	3	11	489
Geological survey of New Mexico, (President's message, part 1.) Report of Acting Governor Davis recommending a	2	11	286
Gideon, in 1855, and by John C. Rives, in 1857. Report relative to the lists of post offices, regulations, &c., published by George S	13	65	1
Gold and silver coinage. (See *Coinage.*)			
Government vessels. (See *Vessels.*)			
Graham, on the lake harbor improvements, for 1857. Report of Col. J. D	12	42	1

Subject.	Vol.	No.	Page.
Great Britain and France, in relation to losses sustained by citizens of their governments at the bombardment of Greytown. Correspondence between the Department of State and ministers from.	1	9	1
Greytown. (See *Great Britain, France, Bremen.*)			
Guano purchased of Vivanco or his agents. Correspondence with the Peruvian minister, and the opinion of Attorney General Black in relation to a recognition of a state of war in Peru, and the protection of American interests in Peruvian	13	69	1
Gulf of Mexico. Correspondence relating to the firing at and seizure of American vessels by foreign armed vessels in the	13	59	1
H.			
Hamburg. Postal convention between the United States and	4	11	1047
Hanse Towns. (See *Bremen.*)			
Harbor and river improvements, military roads, light-houses, &c., accompanying the President's annual message, part 2. Report on	3	11	283
Harbors on Lake Erie. Estimates for the improvement of certain	1	15	1
Harbors and rivers in the State of New York. Estimates for the improvement of	1	16	1
Harbor improvements on the lakes, for 1857. Report of Col. Graham on the	12	42	1
Home squadron, (at the end of vol. 13.) Instructions given to Commodore McCauley, commander of the	13	1	Sp.Ses.
Hospitals, and other public buildings, in charge of the Treasury Department. Report on the construction of marine	1	1	90
Hospital fund for the relief of sick and disabled seamen in the ports of the United States for the fiscal year ending June 30, 1857. Receipts and expenditures of the marine	1	1	138
Hospital for the insane, for the year ending June 30, 1857. Report of the Board of Visitors of the government	2	11	733
Hospital for the insane. Report of the superintendent of the government	2	11	740
House of Representatives. Letter of the Secretary of the Treasury to the First Auditor respecting the contingent fund of the	1	1	82
I.			
Illinois and Missouri. Annual report of the surveyor general of	2	11	148
Importations into and exportations from the United States of certain articles during the quarter ending September 30, 1857	1	1	38
Importations annually, from July 1, 1849, to 1857; the amount of customs each year, and the expenes of collection during the same period	1	1	40
Imports from the beginning of the government to June 30, 1857. Statement of the gross value of exports and	1	1	275
Imports and the imports consumed in the United States, exclusive of specie, during each fiscal year, from 1821 to 1857; showing, also, the value of foreign and domestic exports, exclusive of specie, and the tonnage employed during the same periods. Statement of the value of	1	1	285
Imported into the United States during the fiscal year ending June 30, 1857. General statement of goods, wares, and merchandise of the growth, produce, and manufacture of foreign countries	14	.....	152
Imported into the United States in American and foreign vessels during the year ending June 30, 1857. Summary statement of the quantity and value of goods, wares, and merchandise	14	.....	272
Imported into each collection district of the United States during the fiscal year ending June 30, 1857. General statement of goods, wares, and merchandise of the growth, produce, and manufacture of foreign countries	14	.....	370

Subject.	Vol.	No.	Page.
Imports from each foreign country, and the tonnage of American and foreign vessels arriving from and departing to each foreign country during the year ending June 30, 1857. Statistical view of the value of exports to and	14	.....	510
Imported during the year ending June 30, 1857. Statements exhibiting the indirect trade of the United States, the countries of production and shipment, with the value of the articles	14	.....	578 608
Imported into the United States from that country. Statement in relation to the fees or charges that the consul general of Canada is authorized to make or receive on goods or articles	13	71	1
Imported and exported annually from 1821 to 1857; also of importation over exportation, and of exportation over importation during the same years. Statement of the amount of gold and bullion	1	1	274
Imported, re-exported, and consumed annually from 1821 to 1857; and also the estimated population and rate of consumption per capita during the same period. Statement of the value of foreign merchandise	1	1	284
Indian war in Oregon and Washington Territories. Report of J. Ross Browne on the late	12	40	1
Indian Affairs, with reports and statements from the several superintendents, agents, and teachers. Annual report of the Commissioner of	2	11	289
(*For accompanying papers, see page* 301 *of the above.*)			
Indians, during the year ending June 30, 1857, together with a list of the names of the persons to whom goods, moneys, or effects have been delivered during that period. Copies of accounts of persons charged with the disbursement or application of moneys, goods, or effects for the benefit of the	7	21	1
Indians in the Territory of New Mexico. Report upon claims for depredations of	12	55	1
Indians to lands in the Territory of Kansas. Report relative to the claim of the St. Regis	13	73	1
Indian treaties with various tribes, payable on time. Amount due under	1	1	260
Indian tribes. Amount of stock held in trust by the United States for sundry	1	1	270
Indian agency. Reports of the New York	2	11	308
Indian agency. Reports of the Mackinac	2	11	315
Indian agency for the Indians in the vicinity of Green Bay. Reports of the	2	11	328
Indian superintendency. Reports of the northern	2	11	334
Indian superintendency. Reports of the central	2	11	405
Indian superintendency. Reports of the southern	2	11	479
Indian agency. Report of the Texas	2	11	550
Indian superintendency. Reports of the New Mexico	2	11	561
Indian superintendency Reports of the Utah	2	11	593
Indian superintendency. Reports of the Oregon and Washington	2	11	603
Indian superintendency. Report of the California	2	11	675
Infirmary. Annual report of the resident physician of the Washington	2	11	730
Insane, for the year ending June 30, 1857. Report of the Board of Visitors of the government hospital for the	2	11	733
Insane. Report of the superintendent of the government hospital for the	2	11	740
Inspectors. (See *Steamboats.*)			
Interior, communicating a statement of the appropriations for the service of that department for the fiscal year ending June 30, 1857. Report of the Secretary of the	1	6	1

Subject.	Vol.	No.	Page.
Interior, accompanying the President's annual message, with an exhibit of the operations of the Interior Department during the year 1857, (part 1.) Annual report of the Secretary of the	2	11	57
Interior, communicating the report of John Claiborne, esq., special agent appointed to collect statistics on the consumption of cotton in Europe. Report of the Secretary of the	7	35	1
Interior, in relation to the progress of the Report of Major Emory on the United States and Mexican Boundary Survey. Report of the Secretary of the	12	37	1
Interior, communicating the report of J. Ross Browne on the late Indian war in Oregon and Washington Territories. Report of the Secretary of the	12	40	1
Interior, relative to the United States reserved sections in township 89, range 47, in the State of Iowa. Report of the Secretary of the	12	51	1
Interior, upon claims for depredations by Indians in the Territory of New Mexico, under act of August 18, 1856. Report of the Secretary of the	12	55	1
Interior, relative to the claim of the St. Regis Indians to land in Kansas. Report of the Secretary of the	13	73	1
Iowa and Wisconsin. Annual report of the surveyor general of	2	11	137
Iowa, not included in the proclamation for public sales at Sioux city July 1, 1858. Report in relation to the United States reserved sections of land in township 89, range 47, in the State of	12	51	1
Isthmus of Tehuantepec. (See *Tehuantepec.*)			
J.			
Jaffa, in Palestine. Correspondence concerning the outrages lately committed against the family of Mr. Dickson, an American citizen residing at	12	54	1
K.			
Kansas, and any governor or other officer of the government of Kansas, with any orders or instructions issued, together with other information relative to affairs in that Territory. Correspondence between the Executive Department and the present governor of	1	8	3
(*See list of accompanying papers at page 2 of same.*)			
Kansas. Annual report of the surveyor general of	2	11	262
Kansas and Nebraska, (President's annual message, part 2.) Table of distances on military roads in	3	11	485
Kansas at the election in October, 1856, the act of the legislature providing for said election, and other information connected therewith. Return of the votes taken in	1	12	1
Kansas, not before communicated to Congress. Copies of correspondence of John W. Geary, late governor of	6	17	1
Kansas as a State, and presenting his views in relation to the affairs of that Territory. Message of the President communicating a constitution for	7	21	1
Kansas each quarter since the 1st of January, 1855. Statement of the number of United States troops stationed in	7	22	1
Kansas. Report on the claim of the St. Regis Indians to land in	13	73	1
Key West. (See *Coal Depot.*)			
L.			
Lake Erie. Report on the improvement of certain harbors on	1	15	1
Lake harbor improvements for 1857. Report of Col. Graham on	12	42	1

Subject.	Vol.	No.	Page.
Land Office for the fiscal year ending June 30, 1857, and the quarter ending September 30, 1857, (part 1.) Report of the operations of the General	2	11	78
(*For compendium and schedule of accompanying documents see page* 101 *of same.*)			
Land in township 89, range 47, in the State of Iowa. Report in relation to the United States reserved sections of	12	51	1
Lands in Kansas. Report on the claim of the St. Regis Indians to	13	73	1
Lands sold, of cash, &c., received therefor, of incidental expenses thereon, and of payments into the treasury on account thereof, in the first half of the fiscal year ending June 30, 1857, (part 1.) Statement of public	2	11	102
Lands sold, of cash, &c., received therefor, of incidental expenses thereon, and of payments into the treasury on account thereof, in the second half of the fiscal year ending June 30, 1857, (part 1.) Statement of the public	2	11	108
La Plata river. Report relating to the publication of the results of the United States naval expedition to the	12	52	1
La Sere and Alexander G. Penn, as disbursing agents at New Orleans. Report in relation to the appointment and compensation of Emile	13	64	1
Letters to a person authorized to receive them by the person to whom the letters are addressed. Letter of the Postmaster General relative to the authority of a postmaster to refuse to deliver	13	66	1
Light-House Board. Report of the	1	1	229
Little Falls bridge. (See *Bridge.*)			
Loan to meet the wants of the government. Recommendation of the Secretary of the Treasury for the negotiation of an additional	13	60	1
Louisiana. Annual report of the surveyor general of	2	11	190
Louisville and Portland canal. Report on the condition of the	1	1	149
M.			
McCauley, commander of the Home squadron, (end of vol. 13.) Instructions to Commodore	13	1	Sp.Ses.
Mackerel fishery. (See *Fishery.*)			
Macedonian, by the authorities of Chile. Correspondence relating to the seizure of the proceeds of the cargo of the United States brig	13	58	1
Mail service on steamboats, under the head of States, as in operation September 30, 1857. Statement of	4	11	1080
Mail service on railroads, under the head of States, as in operation September 30, 1857. Statement of	4	11	1068
Mail service on railroads, under the head of States, as in operation June 30, 1857. Statement of	4	11	1056
Mail service in the New York section. Statement of	4	11	1055
Mail service in the New England section. Statement of	4	11	1054
Mail routes, mail contractors, route agents, and mail messengers at the close of the contract year ending June 30, 1857. Statement of the number of	4	11	1054
Mail service, under the head of States, for the year ending June 30, 1857. Statement of	4	11	1052
Mail lines between New York and Liverpool, New York and Chagres, and Astoria and Panama, for the year ending June 30, 1857. Statement of amounts paid on the several	4	11	1022
Mail contractors on route No. 7,809 from New Orleans to Cairo. Report in relation to fines imposed on the	4	11	1012
Mail service on the Mississippi river below the Ohio. Views of the Postmaster General in relation to the	4	11	981
Mail route from New York to New Orleans. Views of the Postmaster General in relation to an increase of speed on the	4	11	977

Subject.	Vol.	No.	Page.
Mail service by railroad in geographical sections. Statement of the increase of	4	11	963
Mail arrangements. Report relating to ocean steamship and foreign	4	11	968
Mail service overland to California, with an abstract of the bids for performing the same, the route adopted, and to whom the contract was awarded, accompanying the President's annual message, (part 3.) Report relating to	4	11	986
Mail service abroad, as in operation September 30, 1857. Statement of	4	11	1020
Mail arrangements between the United States and France. Statement of	4	11	1030
Maps accompanying and illustrating the President's annual message, (part 4.) Report of numerous	5	11	1
Marine corps, and detailed estimates of, from the paymaster and quartermaster of the marine corps, accompanying the President's annual message, (part 3.) Report of the commandant of the	4	11	938
Marine hospitals, court and custom-houses, post offices, and other public buildings. Report on the construction of	1	1	90
Marine hospital fund for the relief of sick and disabled seamen in the ports of the United States, for the year ending June 30, 1857. Receipts and expenditures of the	1	1	138
Medicine and surgery. (See *Bureau of Medicine and Surgery*)			
Merchandise imported. (See *Imported.*)			
Mexican Boundary Survey. Report in relation to the progress of the Report of Major Emory on the United States and	12	37	1
Mexico. Correspondence relating to measures for the protection of American commerce in the ports of	12	56	1
Military roads in Kansas and Nebraska, accompanying the President's annual message, (part 2.) Table of distances of	3	11	485
Military academy during the past year. Statement of the amount expended for the support of the	7	23	1
Military reservation at Fort Crawford. Report in relation to the sale of the	12	45	1
Minnesota. Annual report of the surveyor general of	2	11	119
Minnesota, preparatory to their admission into the Union as a State. Official copy of the constitution adopted by the people of	1	14	1
Mint of the United States, branches, and assay office, during the first six months of 1857; report of the director of the mint, and explanatory tables. Statement of the amount of deposits and coinage of the	1	1	46
Missouri and Illinois. Annual report of the surveyor general of	2	11	148
N.			
Nautical Almanac for 1859, accompanying President's annual message, (part 3.) Report of the superintendent of the American Ephemeris and	4	11	600
Naval supplies for the year ending June 30, 1858. List of contracts for	12	44	1
Naval appropriations. (See *Appropriations.*)			
Naval forces on the coast of Central America connected with the arrest of W. Walker and his associates. Instructions, &c., to the	1	13	1
Naval depot at Blythe island, in the State of Georgia. Report in relation to the measures taken for the establishment of a	12	57	1
Naval Academy at Annapolis, Maryland, accompanying the President's annual message, (part 3.) Report of the board of officers appointed to witness the examination of midshipmen, and to examine into the police discipline and general management of the	4	11	593

Subject.	Vol.	No.	Page.
Naval purposes at Key West, and estimate for its completion, accompanying President's annual message, (part 3.) Report of the superintending engineer of the coal depot for	4	11	596
Naval Academy, transmitting a report of Commander J. F. Green, commandant of the midshipmen, of the cruise of the practice-ship Preble, accompanying President's annual message, (part 3.) Report of the superintendent of the	4	11	587
Navy, accompanying the President's annual message, (part 3.) on the condition and operation of the naval forces during the year 1857. Report of the Secretary of the	4	11	573
(For list of papers accompanying the above see page 587 of same, and also the subjoined table of documents.)			
Navy since the last annual report, (part 3.) List of deaths, resignations, and dismissals in the	4	11	588 590 592
Navy, communicating the correspondence, &c., relating to the arrest of William Walker and his associates at or near the port of San Juan de Nicaragua. Report of the Secretary of the	1	13	5
Navy, communicating a statement of the number and tonnage of government vessels employed in the Pacific ocean, also private vessels employed by the government in transporting coal or other supplies for the United States, and the annual expense thereof. Report of the Secretary of the	12	38	1
Navy, communicating an abstract of offers or list of contracts for furnishing naval supplies, made under the cognizance of the Bureau of Yards and Docks. Report of the Secretary of the	12	44	1
Navy, communicating information in relation to the condition of the United States ship Susquehanna on her arrival at the island of Jamaica, and the reception and assistance extended to her by the British authorities at that island. Report of the Secretary of the	12	48	1
Navy, and correspondence with naval officers connected with the American squadron on the coast of Africa in relation to the African slave trade. Report of the Secretary of the	12	49	59
(See list of documents accompanying the above report at page 59 of same, and also the subjoined table of documents.)			
Navy in relation to the publication of the results of the United States Naval and Exploring Expedition to the North Pacific ocean and China seas, and also of the results of the United States Naval Expedition to the La Plata river. Report of the Secretary of the	12	52	1
Navy in relation to measures taken for the establishment of a naval depot on Blythe island, Georgia. Report of the Secretary of the	12	57	1
Navy, concerning the pay of the retired naval officers whose cases were acted upon by the late naval courts of inquiry and the President; and who have been advanced to a higher grade or position as to pay, though not restored to the active list, than that assigned them by the late "Retiring Board," together with a list of such officers, with the positions assigned them by the said board, and those now held by them. Report of the Secretary of the	13	62	1
Navy, communicating a statement of the time at which each of the vessels of the navy was built, the original cost thereof, the cost of repairs, and their present condition, &c. Report of the Secretary of the	13	70	1
Navy, communicating instructions to Commodore McCauley, commander of the Home Squadron, (at the end of volume 13.) Report of the Secretary of the	13	1	Sp.Ses.
Nebraska and Kansas, accompanying President's annual message, (part 2.) Table of distances of military roads in	3	11	485

Subject.	Vol.	No	Page.
New Inlet, North Carolina. (See *Fort.*)			
New Mexico. Annual report of the surveyor general of	2	11	255
New Mexico. Report of Acting Governor Davis, recommending a geological survey of	2	11	286
New Mexico, to the western borders of California. Exploration of a route from Fort Defiance, in	12	43	1
New Mexico. Report upon claims for depredations by Indians in the Territory of	12	55	1
North Pacific ocean and China seas. (See *Exploration.*)			
O.			
Ocean steamship. (See *Mail.*)			
Officers of the army belonging to the several regiments in service in the field, or at remote or frontier stations, are now absent from duty, and the cause of such absence in each case. Statement showing what	12	39	1
Officers of the navy, whose cases were acted upon by the late naval courts of inquiry and the President, and who have been advanced to a higher grade or position as to pay, though not restored as to the active list, than that assigned them by the late "Retiring Board," together with a list of such officers, with the positions assigned them by the said board, and those now held by them. Report of the Secretary of the Navy, concerning the pay of the retired	13	62	1
Ordnance and Hydrography. (See *Bureau of Ordnance and Hydrography.*)			
Ordnance Department, accompanying the President's annual message, (part 2.) Report of the Chief of the	3	11	535
Ordnance officers, with their number, grades, and stations, accompanying the President's annual message, (part 2.) Statement of	3	11	546
Ordnance ship Plymouth, accompanying the President's annual message, (part 3.) Report of Commander Dahlgren of the cruise of the United States	4	11	603
Oregon. Annual report of the Surveyor General of	2	11	233
Oregon and Washington Territories. Report of the commission on the war claims of	7	24	1
Oregon and Washington Territories. Report of J. Ross Browne on the late Indian war in	12	40	1
P.			
Palestine. Correspondence relating to outrages lately committed against the family of Mr. Dickson, an American citizen, residing at Jaffa, in	12	54	1
Panchita, on the coast of Africa, by a British ship-of-war. Correspondence relating to the seizure of the American vessel	13	61	1
Paraguay, (part 1.) Correspondence in relation to the treaty between the United States and the Republic of	2	11	35
Patents for the year ending December 31, 1857, on the subject of arts and manufactures, (part 1.) Report of the Commissioner of	8	30	1
Patents for the year ending December 31, 1857, on the subject of arts and manufactures, (part 2.) Report of the Commissioner of	9	30	1
Patents for the year ending December 31, 1857, on the subject of arts and manufactures, (part 3.) Report of the Commissioner of	10	30	1
Patents for the year ending December 31, 1857, on the subject of agriculture, (part 4.) Report of the Commissioner of	11	30	1

Subject.	Vol.	No.	Page.
Passengers arriving in the United States. Letter of the Secretary of State, transmitting the annual report of the number, character, &c., of	7	32	1
Paulding. Correspondence relating to the arrest of William Walker and his associates by Commodore	1	13	1
Paulding. Further correspondence relating to the arrest of William Walker and his associates by Commodore	13	63	1
Penitentiary. Report of the warden of the	2	11	753
Penn and Emile La Sere, as disbursing agents at New Orleans. Report in relation to the appointment and compensation of Alexander G	13	64	1
Pensions. Annual report of the Commissioner of	2	11	698
Peru. Report of the Secretary of State, and correspondence with the Peruvian minister, and the opinion of the Attorney General of the United States in relation to the recognition of a state of war in Peru, and the protection of American interests in cargoes of guano purchased from Vivanco, or his officers or agents, during his occupation of guano islands within the territory of	13	69	1
Postal convention between the United States and the government of France. Copy of the	4	11	1022
Postal convention between the United States and Hamburg. Copy of the	4	11	1047
Postmaster General, accompanying the President's annual message, (part 3.) Annual report of the	4	11	961
Postmaster General, relative to the list of post offices, regulations, &c., published by George S. Gideon in 1855, and by John C. Rives in 1857. Report of the	13	65	1
Postmaster General, relative to the authority of a postmaster to refuse to deliver letters to a person authorized to receive them by the person to whom they are addressed. Letter of the	13	66	1
Post Office Department during the fiscal year ending June 30, 1857. Statement of expenditures of the	4	11	965
Post Office Department, together with the operations of the office of Auditor of said Department connected therewith, for the year ending June 30, 1857. Report of receipts and expenditures of the	4	11	1083
Post offices, &c. Report on the construction of	1	1	90
Potomac river, with a chart thereof. Report of a survey and examination of the Georgetown channel of the	7	34	1
Practice ship Preble, President's message, (part 3.) Report of the cruise of the	4	11	598
President of the United States, communicating a letter from the Commissioner of the United States in China, with the regulations for the consular courts of the United States. Message from the	1	5	1
President of the United States, communicating correspondence between the Executive Department and the present and any other governor of Kansas, with the orders or instructions issued, together with other information relative to the affairs in that Territory. Message of the	1	8	1
President of the United States, communicating the correspondence between the Department of State and the ministers from Great Britain and France in relation to losses sustained by citizens of those countries at the bombardment of Greytown. Message of the	1	9	1
President of the United States, communicating correspondence between the Department of State and the minister of Bremen on the subject of alleged losses by subjects of the Hanse Towns at the bombardment of Greytown. Message of the	1	10	1

Subject.	Vol.	No.	Page.
President of the United States on the state of the Union, with accompanying documents, (parts, 1, 2, 3, and 4.) Message of the ..... (*For list of accompanying documents see subjoined table of documents.*)	2, 3, 4, 5	11	1
President of the United States, communicating information in relation to a return of the votes taken in Kansas at the election in October, 1856, the act of the Territorial legislature providing for it, &c. Message of the	1	12	1
President of the United States, communicating the correspondence, instructions, and orders to the United States naval forces on the coast of Central America, connected with the arrest of William Walker and his associates at or near the port of San Juan de Nicaragua. Message of the	1	13	1
President of the United States, communicating a copy of the constitution of Minnesota. Message of the	1	14	1
President of the United States, communicating all correspondence of John W. Geary, late governor of the Territory of Kansas, not before communicated to Congress. Message of the	6	17	1
President of the United States, communicating a constitution for Kansas as a State, and presenting his views in relation to the affairs of that Territory. Message of the	7	21	1
President of the United States, transmitting a copy of the report of the Secretary of State on the subject of contracts made in Europe for inland passage tickets for intending emigrants to the United States. Message of the	7	26	1
President of the United States, transmitting a copy of a convention between the United States and his Majesty the King of Denmark for the discontinuance of the Sound dues. Message of the	7	28	1
President of the United States, communicating a copy of the instructions which have been given to Mr. Reed, commissioner to China. Message of the	12	47	1
President of the United States, communicating reports of the Secretary of State and the Secretary of the Navy, with accompanying papers, in relation to the African slave trade. Message of the	12	49	1
President of the United States, concerning the outrages lately committed against the family of Mr. Dickson, an American citizen, residing at Jaffa, in Palestine. Message of the	12	54	1
President of the United States, in regard to measures which have been adopted for the protection of American commerce in the ports of Mexico, and for obtaining redress for the recent outrages on American vessels in the port of Tampico, and for protecting such vessels against a repetition of such outrages. Message of the ..... (*See list of papers accompanying the above at page 2 of same.*)	12	56	1
President of the United States, communicating correspondence relative to the seizure in the valley of Sitana, in Peru, by the authorities of Chili, of the proceeds of the brig Macedonian, the property of citizens of the United States. Message of the ..... (*See list of papers accompanying the above at page 2 of same.*)	13	58	1
President of the United States, communicating information concerning the recent search or seizure of American vessels by foreign armed cruisers in the Gulf of Mexico. Message of the ..... (*See list of documents accompanying the above at page 2 of same.*)	13	59	1
President of the United States, communicating papers and correspondence in regard to the seizure of the American barque Panchito on the coast of Africa by a British ship of war. Message of the ..... (*See list of accompanying papers at page 2 of same.*)	13	61	1

Subject.	Vol.	No.	Page.
Passengers arriving in the United States. Letter of the Secretary of State, transmitting the annual report of the number, character, &c., of	7	32	1
Paulding. Correspondence relating to the arrest of William Walker and his associates by Commodore	1	13	1
Paulding. Further correspondence relating to the arrest of William Walker and his associates by Commodore	13	63	1
Penitentiary. Report of the warden of the	2	11	753
Penn and Emile La Sere, as disbursing agents at New Orleans. Report in relation to the appointment and compensation of Alexander G	13	64	1
Pensions. Annual report of the Commissioner of	2	11	698
Peru. Report of the Secretary of State, and correspondence with the Peruvian minister, and the opinion of the Attorney General of the United States in relation to the recognition of a state of war in Peru, and the protection of American interests in cargoes of guano purchased from Vivanco, or his officers or agents, during his occupation of guano islands within the territory of	13	69	1
Postal convention between the United States and the government of France. Copy of the	4	11	1022
Postal convention between the United States and Hamburg. Copy of the	4	11	1047
Postmaster General, accompanying the President's annual message, (part 3.) Annual report of the	4	11	961
Postmaster General, relative to the list of post offices, regulations, &c., published by George S. Gideon in 1855, and by John C. Rives in 1857. Report of the	13	65	1
Postmaster General, relative to the authority of a postmaster to refuse to deliver letters to a person authorized to receive them by the person to whom they are addressed. Letter of the	13	66	1
Post Office Department during the fiscal year ending June 30, 1857. Statement of expenditures of the	4	11	965
Post Office Department, together with the operations of the office of Auditor of said Department connected therewith, for the year ending June 30, 1857. Report of receipts and expenditures of the	4	11	1083
Post offices, &c. Report on the construction of	1	1	90
Potomac river, with a chart thereof. Report of a survey and examination of the Georgetown channel of the	7	34	1
Practice ship Preble, President's message, (part 3.) Report of the cruise of the	4	11	598
President of the United States, communicating a letter from the Commissioner of the United States in China, with the regulations for the consular courts of the United States. Message from the	1	5	1
President of the United States, communicating correspondence between the Executive Department and the present and any other governor of Kansas, with the orders or instructions issued, together with other information relative to the affairs in that Territory. Message of the	1	8	1
President of the United States, communicating the correspondence between the Department of State and the ministers from Great Britain and France in relation to losses sustained by citizens of those countries at the bombardment of Greytown. Message of the	1	9	1
President of the United States, communicating correspondence between the Department of State and the minister of Bremen on the subject of alleged losses by subjects of the Hanse Towns at the bombardment of Greytown. Message of the	1	10	1

Subject.	Vol.	No.	Page.
President of the United States on the state of the Union, with accompanying documents, (parts, 1, 2, 3, and 4.) Message of the ..... (*For list of accompanying documents see subjoined table of documents.*)	2, 3, 4, 5	11	1
President of the United States, communicating information in relation to a return of the votes taken in Kansas at the election in October, 1856, the act of the Territorial legislature providing for it, &c. Message of the	1	12	1
President of the United States, communicating the correspondence, instructions, and orders to the United States naval forces on the coast of Central America, connected with the arrest of William Walker and his associates at or near the port of San Juan de Nicaragua. Message of the	1	13	1
President of the United States, communicating a copy of the constitution of Minnesota. Message of the	1	14	1
President of the United States, communicating all correspondence of John W. Geary, late governor of the Territory of Kansas, not before communicated to Congress. Message of the	6	17	1
President of the United States, communicating a constitution for Kansas as a State, and presenting his views in relation to the affairs of that Territory. Message of the	7	21	1
President of the United States, transmitting a copy of the report of the Secretary of State on the subject of contracts made in Europe for inland passage tickets for intending emigrants to the United States. Message of the	7	26	1
President of the United States, transmitting a copy of a convention between the United States and his Majesty the King of Denmark for the discontinuance of the Sound dues. Message of the	7	28	1
President of the United States, communicating a copy of the instructions which have been given to Mr. Reed, commissioner to China. Message of the	12	47	1
President of the United States, communicating reports of the Secretary of State and the Secretary of the Navy, with accompanying papers, in relation to the African slave trade. Message of the	12	49	1
President of the United States, concerning the outrages lately committed against the family of Mr. Dickson, an American citizen, residing at Jaffa, in Palestine. Message of the	12	54	1
President of the United States, in regard to measures which have been adopted for the protection of American commerce in the ports of Mexico, and for obtaining redress for the recent outrages on American vessels in the port of Tampico, and for protecting such vessels against a repetition of such outrages. Message of the ..... (*See list of papers accompanying the above at page 2 of same.*)	12	56	1
President of the United States, communicating correspondence relative to the seizure in the valley of Sitana, in Peru, by the authorities of Chili, of the proceeds of the brig Macedonian, the property of citizens of the United States. Message of the ..... (*See list of papers accompanying the above at page 2 of same.*)	13	58	1
President of the United States, communicating information concerning the recent search or seizure of American vessels by foreign armed cruisers in the Gulf of Mexico. Message of the ..... (*See list of documents accompanying the above at page 2 of same.*)	13	59	1
President of the United States, communicating papers and correspondence in regard to the seizure of the American barque Panchito on the coast of Africa by a British ship of war. Message of the ..... (*See list of accompanying papers at page 2 of same.*)	13	61	1

Subject.	Vol.	No.	Page.
President of the United States, communicating the correspondence in relation to the arrest of William Walker by the naval forces under the command of Commodore Paulding. Message of the	13	63	1
President of the United States, communicating a despatch from Governor Cumming relative to the termination of the difficulties with the Territory of Utah. Message of the	13	67	1
President of the United States, communicating a report of the Secretary of State and accompanying documents on the subject of the protection of American interests in shipping Peruvian guano purchased of Vivanco or his officers or agents during his occupation of certain guano islands within the territory of Peru, and also the correspondence with the Peruvian legation on that subject. Message of the	13	69	1
President of the United States, communicating a report of the Secretary of State in relation to inducements offered the government of Mexico to annul or impair the grant of February 5, 1853, for the construction of a plank road or railroad across the Isthmus of Tehuantepec, as recognized in the treaty published at Washington June 30, 1854, and to obtain a new grant of like character for other parties. Message of the	13	72	1
President of the United States, calling the attention of Congress to the condition of the treasury, and recommending a postponement of the day of adjournment. Message of the	13	68	1
President of the United States, accompanied by the report of the Secretary of the Interior, (part 1.) Annual report of the	2	11	1
President of the United States, accompanied by the report of the Secretary of War, (part 2.) Annual report of the	3	11	1
President of the United States, accompanied by the reports of the Secretary of the Navy and Postmaster General, (part 3.) Annual report of the	4	11	573
President of the United States, composed of maps illustrative of documents accompanying the same, (part 4.) Annual report of the	5	11	1
Printing. Report of the Superintendent of the Public Printing, showing the condition of the public	1	4	1
Printing, binding, and paper ordered by Congress for each year, beginning with December, 1845, and ending with the late session. Statement showing the cost of the	7	27	1
Printing for the executive departments during the last five years. Statement of the amount paid for	12	50	1
Provisions and clothing (See *Bureau of Provisions and Clothing.*)			
Public Buildings. Annual report of the Commissioner of	2	11	718
Public debt. (See *Debt.*)			
Public printing. (See *Printing.*)			
Q.			
Quartermaster General of the army, (President's message, part 2.) Annual report of the	3	11	153
R.			
Railroads of the United States for the year 1857. Statement of the capital paid in; the amount of debt due; the net income; annual interest on debt; and available income of the	1	1	44
Receipts and expenditures for the year ending June 30, 1857. Statement of	1	1	33
Receipts and expenditures for the quarter ending September 30, 1857.	1	1	38
Receipts and expenditures of the Post Office Department for the year ending June 30, 1857. Statement of	4	11	1083

Subject.	Vol.	No.	Page.
Register of the Treasury on the operations of his office during the past year. Report of the	1	1	184
Resignations in the navy. (See *Navy*)			
Reservation at Fort Crawford. Report in relation to the sale of the military	12	45	1
Revenue collected in each collection district for each of the years 1852 to 1857, inclusive; the amount expended, and the number of persons employed in its collection during those years. Statement of the amount of	7	25	1
Revenue collected from the beginning of the government to June 30, 1857, under the several heads of customs, public lands, and miscellaneous sources, including loans and treasury notes; also the expenditures during the same period, and the particular tariff, and price of lands under which the revenue from those sources was collected. Statement of the amount of	1	1	279
River and harbor improvements, light-houses, military roads, &c., accompanying the President's annual message, part 2. Report on	3	11	283
Rivers and harbors in the State of New York. Estimates for the improvement of	1	16	1
River Potomac, with a chart thereof. Report of a survey and examination of the Georgetown channel of the	7	34	1
River La Plata. Report relating to the publication of the results of the United States naval exploring and surveying expedition to the North Pacific ocean, and also of the results of the United States naval expedition to the	12	52	1
Rives in 1857, and by George S Gideon in 1855. Report of the Postmaster General relative to the lists of post offices, regulations, &c., published by John C	13	65	1
Road from Fort Defiance, in New Mexico, to the western borders of California. Report by E. F. Beale of a route for a wagon	12	43	1
Russell, Majors, and Waddell. (See *Contract—Navy.*)			
S.			
St. Regis Indians. (See *Indians.*)			
Seamen. Abstract of returns of American	1	3	1
Second Auditor of the Treasury. (See *Auditor—Treasury.*)			
Second Comptroller of the Treasury. (See *Comptroller.*)			
Sixth Auditor. (See *Auditor.*)			
Slave trade, and concerning the movements of the French government to establish a colonization in the possessions of that government from the coast of Africa Report of the Secretary of State, and correspondence with the British authorities, collectors of customs, *et al.*, in relation to the African	12	49	1
Slave trade. Report of the Secretary of the Navy, and correspondence with naval officers connected with the American squadron on the coast of Africa, concerning the condition of the African	12	49	59
Smithsonian Institution. Amount of stock held by the United States in trust for the	1	1	270
Solicitor of the Treasury on the operations of his office during the past year. Report of the	1	1	179
Sound dues. Copy of a convention between the United States and his Majesty the King of Denmark for the discontinuance of the	7	28	1
State, showing the disbursements of the State Department during the fiscal year ending June 30, 1857, including disbursements for contingent expenses of foreign intercourse. Report of the Secretary of	1	2	1

Subject.	Vol.	No.	Page.
State, communicating an abstract of returns of American seamen. Report of the Secretary of	1	3	1
State and Governors Walker and Denver and Secretary Stanton, of the Territory of Kansas, in relation to the affairs of that Territory. Correspondence between the Secretary of	1	8	1
State and the British and French ministers, on the subject of claims for losses alleged to have been sustained by subjects of Great Britain and France at the bombardment of Greytown. Correspondence between the Secretary of	1	9	1
State and the minister of Bremen, in relation to alleged losses sustained by subjects of the Hanse Towns at the bombardment of Greytown. Correspondence between the Secretary of	1	10	1
State, the commander of the United States steamer Water Witch, and the authorities of the republic of Paraguay, in relation to the ratification of the treaty with that republic (part 1.) Correspondence between the Secretary of	2	11	35
State, with copies of the correspondence with, and despatches from, American ministers at the courts of England, France, Switzerland, and other powers, on the subject of the dangers to emigrants arising from the practice of contracting with irresponsible parties in Europe for American inland passage tickets. Report of the Secretary of	7	26	1
State, transmitting the annual report of the number, character, &c., of passengers arriving in the United States by sea from foreign countries during the year ending December 31, 1857, their place of birth, their intended place of residence, and deaths on the voyage, with comparative statements showing the place of birth of those arriving during each of the last four years, with their occupation, age, &c., and the number arriving from foreign countries from September 30, 1843, to December 31, 1857. Letter from the Secretary of	7	32	1
State, communicating a copy of instructions to Mr. Reed, commissioner of the United States to China. Copy of instructions from the Secretary of	12	47	1
State, communicating correspondence with British authorities, &c., in relation to the African slave trade. Report of the Secretary of	12	49	1
(*See list of accompanying papers at page 2 of same.*)			
State, communicating the correspondence with the Peruvian minister in relation to the boarding and detention of the American vessel the "Dorcas C. Yeaton," by the Peruvian armed steamer the "Tumbes," and the capture of two other American vessels, the "Georgiana" and the "Lizzie Thompson," by the same national cruiser. Report of the Secretary of	13	69	1
State, communicating information as to whether any efforts have been made, by authority of the Executive Department, to induce the Mexican government to annul or impair the grant of February 5, 1853, for the construction of a plank road or railroad across the Isthmus of Tehuantepec, as recognized in the treaty of June 30, 1854, and to obtain a new grant of like character for other parties, &c. Report of the Secretary of	13	72	1
State, on commercial relations (in quarto.) Report of the Secretary of	16	53	1
Statistics on the consumption of cotton in Europe. Report of Mr. Claiborne, special agent appointed to collect	7	35	1
Steamer Water Witch, and the authorities of Paraguay, in relation to firing into said steamer, and also the ratification of the treaty between the United States and that republic (part 1.) Correspondence between Lieutenant Page, commander of the United States	2	11	35

Subject.	Vol.	No.	Page.
Steamboats for the past year. Report of the supervising inspectors of	1	1	212
Steam navigation. (See *Tonnage.*)			
Stock is redeemable; the amount redeemed and Texas debt paid since 3d of March last; the amount of interest to maturity, and the amount saved by anticipating the day of payment. Statement showing the periods when the United States	1	1	43
Stock held in trust by the United States for several of the Indian tribes and Smithsonian Institution. Statement of amount of	1	1	270
Superintendent of Public Printing, showing the condition of the public printing. Report of the	1	4	1
Superintendent of the Naval Academy. (See *Naval Academy.*)			
Superintendent of the Nautical Almanac. (See *Nautical Almanac.*)			
Supervising inspectors of steamboats. Report of the	1	1	212
Surgeon general of the army (President's message, part 2.) Annual report of the	3	11	165
Surveyor general of Minnesota, (part 1.) Annual report of the	2	11	119
Surveyor general of Wisconsin and Iowa. Annual report of the	2	11	137
Surveyor general of Illinois and Missouri. Annual report of the	2	11	148
Surveyor general of Arkansas. Annual report of the	2	11	159
Surveyor general of Louisiana. Annual report of the	2	11	190
Surveyor general of Florida. Annual report of the	2	11	218
Surveyor general of California. Annual report of the	2	11	221
Surveyor general of Oregon. Annual report of the	2	11	233
Surveyor general of Washington. Annual report of the	2	11	247
Surveyor general of New Mexico. Annual report of the	2	11	255
Surveyor general of Kansas. Annual report of the	2	11	262
Susquehanna, on her arrival at the island of Jamaica, and the reception and assistance extended to her officers and crew, who were sick with the yellow fever, by the British authorities at that island. Report in relation to the ship	12	48	1
T.			
Tampico. Correspondence in relation to outrages committed on American vessels in the port of	12	56	1
Tehuantepec, per treaty of June 30, 1854, and to obtain a new grant of like character for other parties, &c. Report as to whether any efforts have been made, under authority of the Executive Department, to induce the government of Mexico to annul or impair the grant of February 5, 1853, for the construction of a plank or railroad across the Isthmus of	13	72	1
Third Auditor. (See *Auditor.*)			
Tonnage of the several districts of the United States on the last day of June, 1857. Statement of the	14	.....	612
Tonnage of the several districts of the United States on the 30th June, 1857. Condensed view of the	14	.....	620
Tonnage thereof, in each State and Territory of the United States during the year ending June 30, 1857. Statement of the number and class of vessels built, and the	14	.....	624
Tonnage and crews, which entered into each district of the United States, and the countries from whence they arrived, during the year ending 30th June, 1857. Statement of the number of American and foreign vessels, with their	14	.....	552
Tonnage and crews, which departed from each district of the United States, and the countries to which they cleared, during the fiscal year ending 30th June, 1857. Statement of the number of American and foreign vessels, with their	14	.....	526

Subject.	Vol.	No.	Page.
Tonnage and crews, which entered into each district of the United States from foreign countries during the fiscal year ending 30th June, 1857. Statement of the number of American and foreign vessels, with their	14	------	522
Tonnage and crews, which cleared from the United States for foreign countries during the year ending 30th June, 1857. Statement exhibiting the number of American and foreign vessels, with their	14	------	490
Tonnage and crews, which entered into the United States from foreign countries during the year ending 30th June, 1857. Statement exhibiting the number of American and foreign vessels, with their	14	------	494
Tonnage of American and foreign vessels arriving from and departing to each foreign country, during the year ending 30th June, 1857. Statistical view of the commerce of the United States, exhibiting the value of exports to and imports from each foreign country, and the	14	------	510
Tonnage and crews, which cleared from each district of the United States for foreign countries during the year ending 30th June, 1857. Statement of the number of American and foreign vessels, with their	14	------	518
Tonnage of government vessels employed in the Pacific ocean, also private vessels employed by the government in transporting coal or other supplies for the United States, and the annual expense thereof. Report of the Secretary of War, communicating the number and	12	38	1
Tonnage of the United States, annually, from 1789 to 30th June, 1857; also, the registered and enrolled and licensed tonnage employed in steam navigation each year. Statement of the amount of the	1	1	277
Tonnage employed during each fiscal year from 1821 to 1857. Statement of the value of	1	1	285
Tonnage of the United States, showing the tonnage employed in the whale fishery; also, the proportion of the enrolled and licensed tonnage employed in the coasting trade, cod fishery, mackerel fishery, and whale fishery, from 1815 to 1857, inclusive. Comparative view of the registered and enrolled	14	------	632
Tonnage thereof, in the several States and Territories of the United States from 1815 to 1857, inclusive. Statement showing the number and class of vessels built, with the	14	------	636
Topographical Engineer, accompanying the President's annual message, (part 2,) relative to river and harbor improvements, light-houses, military roads, &c. Report of the Chief	3	11	283
Trade of the United States. (See *Imported*)			
Treasurer of the United States, the assistant treasurers, the treasurers of the mint and the branch mints acting as assistant treasurers, and public depositaries, under 15th section of act of 6th August, 1846. Circular instructions to the	1	1	78
Treasurer of the United States on the operations of his office during the past year. Report of the	1	1	177
Treasurer of the United States, communicating copies of his accounts for the third and fourth quarters of the year 1856 and the first and second quarters of the year 1857. Letter of the	6	19	1
Treasury on the state of the finances for the year ending June 30, 1857. Report of the Secretary of the	1	1	1

(*See index to the above at page* 29 *of same*)

Subject.	Vol.	No.	Page.
Treasury, communicating copies of accounts of persons charged with the disbursement or application of moneys, goods or effects for the benefit of the Indians, during the year ending June 30, 1857, together with a list of the names of the persons to whom goods, moneys, or effects have been delivered during that period. Letter of the Second Auditor of the	7	20	1
Treasury, communicating the amount of the revenue collected in each collection district for each of the years 1852 to 1857, inclusive, the amount expended, and the number of persons employed in its collection during those years. Report of the Secretary of the	7	25	1
Treasury, in relation to the cost of the printing, binding, and paper ordered by Congress for each year beginning with December, 1845, and ending with the late session. Report of the Secretary of the	7	27	1
Treasury, communicating statements of the amounts paid annually during the last five years for printing for the executive departments. Report of the Secretary of the	12	50	1
Treasury, relative to the present condition of the finances of the government, and the necessity of a loan to meet its demands. Report of the Secretary of the	13	60	1
Treasury, in relation to the appointment and compensation of Alexander G. Penn and Emile La Sere as disbursing agents at New Orleans. Report of the Secretary of the	13	64	1
Treasury, communicating information in relation to the fees or charges that the consul general for Canada is authorized to make and receive on goods or articles imported into the United States from Canada. Report of the Secretary of the	13	71	1
Treasury Department. Circular instructions to the disbursing officers and disbursing agents employed under the direction of the	1	1	79
Treasury to the First Auditor, respecting the contingent fund of the House of Representatives. Letter of the Secretary of the	1	1	82
Treasury Department. Report of the engineer in charge of the office of construction relating to custom-houses, court-houses, post offices, marine hospitals, and other public buildings confided to the charge of the	1	1	90
Treasury, transmitting a report from the Register of the Treasury of the commerce and navigation of the United States for the year ending June 30, 1857. Report of the Secretary of the	14	------	1
(*See index to the above at page* 638 *of same.*)			
Treasury, and recommending to Congress a postponement of the day of adjournment. Message of the President calling the attention of Congress to the condition of the	13	68	1
Treasury, communicating the annual report on the coast survey (in quarto) Report of the Secretary of the	15	33	1
Treaties with various Indian tribes. Statement of amount due under	1	1	260
Trust funds. (See *Funds.*)			
U.			
United States steamer Water Witch and the authorities of the republic of Paraguay, in relation to the ratification of the treaty with that republic, President's message, (part 1.) Correspondence between Lieut. Page, commander of the	2	11	35
United States stock. (See *Stock.*)			

Subject.	Vol.	No.	Page.
Utah expedition, with correspondence between the officers connected with it and Brigham Young, late governor of Utah Territory, President's message, (part 2) Reports on the....	3	11	21
Utah, relative to the termination of the difficulties with that Territory. Despatch from A. Cumming, governor of.....	13	67	1
V.			
Vessels, with their tonnage and crews, which departed from each district of the United States, and the countries to which they cleared, during the year ending June 30, 1857. Statement of the number of American and foreign.....	14	.....	526
Vessels, with their tonnage and crews, which entered into each district of the United States, and the countries from whence they arrived, during the fiscal year ending June 30, 1857. Statement of the number of American and foreign.....	14	.....	552
Vessels during the fiscal year 1856–'57. Statement of the value and quantity of goods, wares, and merchandise imported into the United States in American and foreign.....	14	.....	272
Vessels, with their tonnage and crews, which cleared from the United States for foreign countries during the year ending June 30, 1857. Statement exhibiting the number of American and foreign.....	14	.....	490
Vessels, with their tonnage and crews, which entered into the United States from foreign countries during the fiscal year ending June 30, 1857. Statement exhibiting the number of foreign and American.....	14	.....	494
Vessels which entered into and cleared from the United States for foreign countries during the year ending June 30, 1857. Statement exhibiting the national character of the foreign...	14	.....	498
Vessels arriving from and departing to each foreign country during the year ending June 30, 1857. Statistical view of the commerce of the United States, exhibiting the value of exports to and imports from each foreign country, and the tonnage of American and foreign.....	14	.....	510
Vessels, with their tonnage and crews, which cleared from each district of the United States for foreign countries during the year ending June 30, 1857. Statement of the number of American and foreign.....	14	.....	518
Vessels, with their tonnage and crews, which entered into each district of the United States from foreign countries during the year ending June 30, 1857. Statement of the number of American and foreign.....	14	.....	522
Vessels employed in the Pacific ocean, also private vessels employed by the government in transporting coal or other supplies for the United States, and the annual expense thereof. Statement of the number and tonnage of.....	12	38	1
Vessels in the port of Tampico. Correspondence relating to outrages committed on American.....	12	56	1
Vessels by foreign armed cruisers in the Gulf of Mexico. Correspondence relating to the firing at and seizure of American..	13	59	1
Vessels of the navy were built, the original coast thereof, the cost repairs, and their present condition, &c. Statement of the time at which each of the.....	13	70	1
Vessels built, and the tonnage thereof, in each State and Territory of the United States, during the year ending June 30, 1857. Statement of the number and class of.....	14	.....	624 629
Vessels built, and the tonnage thereof, in the several States and Territories of the United States, from 1815 to 1857, inclusive. Statement showing the number and class of.....	14	.....	636

Subject.	Vol.	No.	Page.
W.			
Wagon road from Fort Defiance, in New Mexico, to the western borders of California. Report of E. F. Beale of an exploration for a	12	43	1
Walker and his associates at or near the port of San Juan de Nicaraugua. Instructions and orders to the United States naval forces on the coast of Central America connected with the arrest of William	1	13	1
Walker and his associates by the United States naval forces under the command of Commodore Paulding. Correspondence not before communicated in relation to the arrest of	13	63	1
War, transmitting an estimate for a fort at New Inlet, North Carolina. Report of the Secretary of	1	7	1
War, accompanying the President's annual message, (part 2,) on the condition and operations of the army during the year 1857. Report of the Secretary of	3	11	1
(See list of documents accompanying the above, at pages 21 and 94 of same.			
War, communicating estimates for the improvement of certain harbors on Lake Erie. Report of the Secretary of	1	15	1
War, communicating estimates for the improvement of rivers and harbors in the State of New York. Report of the Secretary of	1	16	1
War, transmitting a statement of expenditures for contingent expenses of that department, its officers, and bureaus, during the year ending June 30, 1857. Report of the Secretary of	6	18	1
War, showing the number of troops stationed in Kansas each quarter since January 1, 1855. Report of the Secretary of	7	22	1
War, showing the amount expended for the support of the Military Academy during the past year. Report of the Secretary of	7	23	1
War, communicating the report of the commission on the war claims of Oregon and Washington Territories. Report of the Secretary of	7	24	1
War, transmitting a statement of the Second Comptroller of the appropriations for the War Department for the fiscal year 1856–'57; the repayments and transfers in the same time; the amounts applicable to the service of the year 1856–'57; the amounts drawn by requisitions from the treasury in the same period; and the balances on June 30, 1857, with such appropriations as have been carried to the surplus fund, under act of May 1, 1820. Report of the Secretary of	7	29	1
War, communicating a statement of contracts made under authority of that department during the year 1857. Report of the Secretary of	7	31	1
War, transmitting the report of Captain Woodruff, of the Topographical Bureau, of surveys and examinations of the Georgetown channel of the Potomac river, accompanied by a chart thereof. Report of the Secretary of	7	34	1
War, communicating lists of persons employed in the War Department, other than officers of the army, during the year 1857. Report of the Secretary of	12	36	1
War, communicating a statement showing what officers of the army belonging to the several regiments in service in the field, or at remote or frontier stations, are now absent from duty, and the cause of such absence in each case. Report of the Secretary of	12	39	1
War, communicating a statement of the expenses of the armories, and of the number of arms and appendages made and altered thereat, during the year ending June 30, 1857. Report of the Secretary of	12	41	1

Subject.	Vol.	No.	Page.
War, communicating the report of Col. Graham, of the corps of Topographical Engineers, in relation to lake harbor improvements under his direction, for the year 1857. Report of the Secretary of	12	42	1
War, communicating a report of E. F. Beale of his exploration for a wagon road from Fort Defiance, in New Mexico, to the western borders of California. Report of the Secretary of	12	43	1
War, communicating information in relation to the sale of the military reservation at Fort Crawford. Report of the Secretary of	12	45	1
War, communicating a copy of a contract made with Russell, Majors & Waddell for beef cattle, and also a statement of contracts made under the authority of the War Department, during the present session of Congress, in connexion with the Utah expedition, without public notice. Report of the Secretary of	12	46	1
Warden of the penitentiary, accompanying the President's annual message, (part 1.) Report of the	2	11	752
Washington aqueduct. (See *Aqueduct.*)			
Washington infirmary. (See *Infirmary.*)			
Washington Territory, accompanying the President's annual message, (part 1.) Annual report of surveyor general of	2	11	247
Washington and Oregon Territories. Report of the commission on the war claims of	7	24	1
Washington and Oregon Territories. Report of J. Ross Browne on the late Indian war in	12	40	1
Water Witch. (See *Steamer.*)			
Whale fishery, from 1815 to 1857. Statement of the tonnage employed in the	14	------	632
Wisconsin and Iowa. Annual report of the surveyor general of	2	11	137
Y.			
Yards and Docks. (See *Bureau of Yards and Docks.*)			

TABLE

OF

EXECUTIVE DOCUMENTS

PRINTED BY ORDER OF

THE SENATE OF THE UNITED STATES,

FIRST SESSION, THIRTY-FIFTH CONGRESS,

1857-'58.

CONTAINED IN 16 VOLUMES.

Subject.	Vol.	No.	Page.
Messages from the President of the United States, viz:			
Communicating a letter from Mr. Parker, the United States commissioner to China, with the regulations for the consular courts of the United States of America in China	1	5	1
Communicating correspondence between the executive department and the present governor of Kansas, and between the Executive and any governor or other officer of the government in Kansas, with any orders or instructions which may have been issued, together with other information relative to affairs in that Territory	1	8	1
List of accompanying papers.			
Mr. Cass to Mr. Walker, March 30, 1857	1	8	3
Same to same, March 30, 1857	1	8	3
Same to Mr. Stanton, March 31, 1857	1	8	5
Mr. Stanton to Mr. Cass, (with an enclosure,) April 17, 1857	1	8	5
Mr. Cass to Mr. Stanton, May 6, 1857	1	8	8
Mr. Walker to Mr. Cass, (with an enclosure,) May 9, 1857	1	8	8
Same to same, (with an enclosure,) June 2, 1857	1	8	9
Same to same, (with enclosures,) July 15, 1857	1	8	26
Same to same, July 20, 1857	1	8	46
Same to same, July 25, 1857	1	8	49
Mr. Cass to Mr. Walker, July 25, 1857	1	8	50
Mr. Walker to Mr. Cass, (with enclosures,) July 27, 1857	1	8	51
Mr. Cass to Mr. Walker, July 31, 1857	1	8	60
Mr. Walker to Mr Cass, (with enclosures,) August 3, 1857	1	8	61
Same to same, August 18, 1857	1	8	63
Same to same, August 19, 1857	1	8	66
Mr. Cass to Mr. Walker, (with an accompaniment,) August 23, 1857	1	8	70
Same to same, September 1, 1857	1	8	75
Same to same, September 2, 1857	1	8	77
Mr. Walker to Mr. Cass, (with enclosures,) September 26, 1857	1	8	78
Same to same, (with enclosures.) October 10, 1857	1	8	96
Same to same, October 10, 1857	1	8	98
Mr. Cass to Mr. Walker, October 21, 1857	1	8	99
Mr. Walker to Mr. Cass, (with enclosures,) November 3, 1857	1	8	99

Subject.	Vol.	No.	Page.
Messages from President—papers accompanying—Cont'd.			
Mr. Stanton to Mr. Cass, November 9, 1857	1	8	110
Mr. Stanton to the President, November 11, 1857	1	8	110
Mr. Cass to Mr. Stanton, November 30, 1857	1	8	110
Same to same, December 2, 1857	1	8	112
Same to same, December 8, 1857	1	8	113
Mr. Stanton to Mr. Cass, (with enclosures,) December 9, 1857	1	8	113
Mr. Cass to Mr. Denver, December 11, 1857	1	8	120
Mr. Walker to Mr. Cass, December 15, 1857	1	8	122
Mr. Cass to Mr. Walker, December 18, 1857	1	8	133
Communicating correspondence between the Department of State and the minister of France, in relation to losses sustained by citizens of France at the bombardment of Greytown	1	9	1
List of accompanying papers.			
The Count de Sartiges to Mr. Marcy, January 13, 1857, (translation)	1	9	2
Mr. Marcy to the Count de Sartiges, February 26, 1857	1	9	3
The Count de Sartiges to Mr. Marcy, March 1, 1857	1	9	11
Communicating correspondence between the Department of State and the minister of Bremen, on the subject of claims for losses alleged to have been sustained by subjects of the Hanse Towns at the bombardment of Greytown	1	10	1
List of accompanying papers.			
Mr. Schleiden to Mr. Marcy, (with accompaniments,) November 6, 1855	1	10	2
Mr. Marcy to Mr. Schleiden, November 19, 1855	1	10	20
Mr. Schleiden to Mr. Marcy, November 23, 1855	1	10	20
Mr. Marcy to Mr. Schleiden, November 24, 1855	1	10	22
Mr. Schleiden to Mr. Marcy, (with accompaniments,) January 28, 1856	1	10	22
On the state of the Union	2	11	1
Accompanying correspondence.			
THE UNITED STATES AND PARAGUAY.			
Mr. Marcy to Lieutenant Page, June 2, 1854	2	11	35
Lieutenant Page to Mr. Marcy, October 17, 1854	2	11	36
Lieutenant Page to Mr. Marcy, November 5, 1854	2	11	37
Lieutenant Page to Mr. Falcon, October 16, 1854	2	11	40
Mr. Falcon to Commander Page, October 21, 1855	2	11	40
Commander Page to Mr. Dobbin, February 5, 1855	2	11	41
Lieutenant Jeffers to Commander Page, February 2, 1855	2	11	42
Commander Page to Mr. Marcy, January 28, 1856	2	11	44
Mr. Marcy to Mr. Fitzpatrick, August 5, 1856	2	11	45
Commander Page to Mr. Toucey, August 4, 1857	------	11	51
Communicating information in relation to a return of votes taken in Kansas at the election in October, 1856; the act of the territorial legislature providing for that election, and other information connected therewith	1	12	1
Communicating the correspondence, instructions and orders to the United States naval forces on the coast of Central America connected with the arrest of William Walker and his associates at or near the port of San Juan de Nicaragua	1	13	1

Subject.	Vol.	No.	Page.
Messages from President—Continued.			
List of accompanying documents.			
No. 1.—Secretary of the Navy to Commander Chatard, commanding the United States sloop Saratoga; Commander Thatcher, commanding United States sloop Decatur, and the commandants of the several navy yards; and enclosing circular from the State Department in relation to unlawful military expeditions from the United States against Mexico, Nicaragua, and Costa Rica	1	13	7
No. 2.—Secretary of the Navy to Lieutenant Almy, commanding United States steamer Fulton, at Washington, on the same subject, embracing sailing instructions	1	13	8
No. 3.—Secretary of the Navy to Flag Officer Paulding, commanding home squadron, on the same subject	1	13	8
No. 4.—Lieutenant Almy to the Secretary of the Navy, acknowledging receipt of instructions	1	13	9
No. 5.—Lieutenant Almy to Secretary of the Navy, requesting more specific instructions in connexion with circular from State Department for his guidance.	1	13	9
No. 6.—Secretary of the Navy to Lieutenant Almy, in reply to No. 5	1	13	10
No. 7.—Lieutenant Almy to Secretary of the Navy, reporting Fulton ready to sail for Mobile and New Orleans, *en route* to Chiriqui	1	13	11
No. 8.—Flag Officer Paulding to Secretary of the Navy, complaining of the action of the department in connexion with its orders to the Fulton	1	13	11
No. 9.—Lieutenant Almy to Secretary of the Navy, reporting his arrival, with Fulton, at Mobile	1	13	12
No. 10.—Lieutenant Almy to Secretary of the Navy, reports his arrival at New Orleans, and giving an account of his interviews with the United States marshal at Mobile in regard to the fitting out of unlawful military expeditions, &c	1	13	13
No. 11.—Secretary of the Navy to Flag Officer Paulding, in reply to No. 8, complaining of the action of the department in the case of the Fulton	1	13	14
No. 12.—Secretary of the Navy to Captain Sands, commanding United States steam frigate Susquehanna, ordering him to San Juan del Norte, with instructions about unlawful military expeditions against Nicaragua, &c	1	13	14
No. 13.—Flag Officer Paulding to Secretary of the Navy, reports arrival of the Fulton at Boco del Toro; instructions given to him, &c	1	13	15
No. 14.—Flag Officer Paulding to Secretary of the Navy, reporting arrival of the English mail steamer "Dee," with information of the landing of Walker and his followers, the particulars of which are given in enclosures	1	13	16
A.—Commander Chatard to Flag Officer Paulding	1	13	16
C.—Walker to Flag Officer Paulding	1	13	18
D.—S. S. Wood to Flag Officer Paulding	1	13	19

Subject.	Vol.	No.	Page.
Messages from President—Accompanying documents—Cont'd.			
No. 15.—Flag Officer Paulding to Secretary of the Navy, reporting the surrender of General Walker and embarcation of himself and followers from Punta Arenas, (with enclosures)	1	13	20
A.—General Walker to Flag Officer Paulding, giving an account of his departure from Mobile, landing at Punta Arenas, and protesting against the action of Commander Chatard, of the Saratoga	1	13	21
B.—Flag Officer Paulding, in reply, and demanding surrender of General Walker	1	13	23
C.—Flag Officer Paulding to Marshal Rynders, consigning General Walker to his custody	1	13	23
D.—Commander Chatard to Flag Officer Paulding, transmitting copies of his several communications with Walker.	1	13	24
No. 16.—Flag Officer Paulding to Secretary of the Navy, reports his arrival at Aspinwall, and the departure of Saratoga for Norfolk, with one hundred and fifty of General Walker's followers	1	13	26
No. 17.—Flag Officer Paulding to Secretary of the Navy, giving his reasons for having arrested and sent to the United States Gen'l Walker and his followers.	1	13	26
No. 18.—Flag Officer Paulding to Secretary of the Navy, stating that he had taken the steamer "Morgan," seized by Walker's party, and liberated about forty prisoners	1	13	28
No. 19.—Flag Officer Paulding to Secretary of the Navy, detailing the incidents of the landing of the naval forces on Point Arenas to arrest Walker, and speaking in high terms of the skill exhibited by the officers, and the admirable discipline of the men	1	13	28
No. 20.—Flag Officer Paulding to Secretary of the Navy, enclosing list of articles found in Walker's camp, and embarked on the Wabash and Saratoga; and also a report made by Lieutenant Cilley to Commander Chatard, of an indignity offered him by Walker	1	13	29
No. 21.—Flag Officer Paulding to Secretary of the Navy, reporting arrival of the Susquehanna at San Juan del Norte, and enclosing copy of instructions given to Captain Sands	1	13	33
No. 22.—Secretary of the Navy to Flag Officer Paulding, acknowledging receipt of despatches, and enjoining upon him particular vigilance in carrying out instructions heretofore given in relation to unlawful expeditions, and directing suspension of Commander Chatard from his command	1	13	34
No. 23.—Secretary of the Navy to Commander Kennedy, commanding United States sloop Jamestown, at Philadelphia, ordering him to proceed with her to San Juan del Norte, as part of the home squadron, and instructing him in regard to unlawful military expeditions from the United States against Mexico, Nicaragua and Costa Rica.	1	13	35
No. 24.—Commander Chatard to Secretary of the Navy, reporting arrival of the Saratoga at Norfolk, with General Walker's party, and enclosing list of their names, and of the stores received on board the Saratoga belonging to them	1	13	35

Subject.	Vol.	No.	Page.
Messages from President—Continued.			
Communicating a copy of the constitution of Minnesota, together with an abstract of the votes polled for and against said constitution	1	14	1
Communicating all the correspondence of John W. Geary, late governor of the Territory of Kansas, not heretofore communicated to Congress	6	17	1
Accompanying papers.			
Governor Shannon to Mr. Marcy, April 27, 1856, (with accompaniments, from No. 1 to No. 8, inclusive)	6	17	2
The President of the United States to Governor Shannon, May 23, 1856	6	17	15
The same to same, May 23, 1856	6	17	15
Governor Shannon to the President of the United States, May 31, 1856, (with accompaniments, from No. 1 to No. 6, inclusive)	6	17	16
The President of the United States to Governor Shannon, June 6, 1856	6	17	24
Mr. Davis, Secretary of War, to Mr. Marcy, Secretary of State, July 16, 1856, (with two accompaniments)	6	17	24
Governor Geary to Mr. Marcy, October 17, 1856, (with accompanying executive minutes from the 1st to 16th October, 1855, inclusive)	6	17	27
Governor Geary to Mr. Marcy, December 8, 1856, (with accompanying minutes, embracing different periods, up to March 31, 1857, and including correspondence with the officers of the United States troops, judicial and ministerial officers, &c	6	17	65
Communicating a copy of the constitution of Kansas as a State, and presenting his views in relation to the affairs of that Territory	7	21	1
Communicating information on the subject of contracts made in Europe for inland passage tickets for intending emigrants to the United States	7	26	1
List of accompanying papers.			
Circular of the department, No. 17, (with accompaniments)	7	26	3
Mr. Campbell to Mr. Marcy, February 17, 1857	7	26	9
Mr. Dallas to Mr. Marcy, February 17, 1857, (extract)	7	26	10
Mr. Fay to Mr. Marcy, February 17, 1857, (extract)	7	26	10
Mr. Vesey to Mr. Marcy, February 28, 1857	7	26	10
Mr. Fay to Mr. Marcy, March 3, 1857, (extract)	7	26	11
Mr. Fay to Mr. Marcy, (with an accompaniment,) March 4, 1857, (extract)	7	26	11
Mr. Fay to Mr. Marcy, (with accompaniments,) March 10, 1857	7	26	12
Mr. Dallas to Mr. Cass, (with accompaniments,) March 26, 1857, (extracts)	7	26	15
Mr. Miller to Mr. Marcy, (with an accompaniment,) March 26, 1857	7	26	17
Mr. Herbemont to Mr. Cass, March 27, 1857, (extract)	7	26	18
Mr. Brustlein to Mr. Cass, April 7, 1857	7	26	18
Mr. Ricker to Mr. Cass, (with accompaniments,) May 25, 1857	7	26	19
Mr. Fay to Mr. Cass, (with accompaniments,) June 11, 1857, (extract)	7	26	21
Mr. Fay to Mr. Cass, (with an accompaniment,) June 18, 1857	7	26	25

Subject.	Vol.	No.	Page.
Messages from President—Accompanying papers—Cont'd.			
Mr. Fay to Mr. Cass, (with an accompaniment,) June 23, 1857	7	26	26
Mr. Ricker to Mr. Cass, (with an accompaniment,) July 3, 1857	7	26	29
Mr. Fay to Mr. Cass, (with an accompaniment,) July 7, 1857, (extract)	7	26	30
Mr. Fay to Mr. Cass, (with an accompaniment,) July 17, 1857, (extract)	7	26	35
Mr. Ricker to Mr. Cass, (with an accompaniment,) July 19, 1857	7	26	38
Mr. Fay to Mr. Cass, (with accompaniments,) July 22, 1857, (extract)	7	26	40
Mr. Fay to Mr. Cass, (with accompaniments,) September 3, 1857, (extract)	7	26	42
Mr. Mason to Mr. Cass, (with accompaniments,) August 15, 1857	7	26	55
Mr. Cass to Mr. Fay, (with an accompaniment,) September 19, 1857	7	26	58
Mr. Cass to Mr. Mason, September 29, 1857	7	26	61
Mr. Fay to Mr. Cass, October 10, 1857, (extract)	7	26	61
Mr. Fay to Mr. Cass, (with an accompaniment,) November 23, 1857, (extract)	7	26	62
Mr. Fay to Mr. Cass, (with accompaniments,) December 15, 1857, (extracts)	7	26	63
Transmitting a copy of a convention between the United States and his majesty the King of Denmark for the discontinuance of the Sound dues	7	28	1
Communicating a copy of the instructions which have been given to Mr. Reed, the commissioner of the United States to China	12	47	1
Communicating reports of the Secretary of State and the Secretary of the Navy, with accompanying papers, in relation to the African slave trade	12	49	1
Communicating correspondence, &c., concerning the outrages lately committed against the family of Mr. Dickson, an American citizen residing at Jaffa, in Palestine	12	54	1
Communicating a report from the Secretary of State in regard to measures adopted for the protection of American commerce in the ports of Mexico	12	56	1
Communicating correspondence relative to the seizure, in the valley of Sitana, in Peru, by the authorities of Chili, of the proceeds of the cargo of the brig Macedonian, the property of citizens of the United States	13	58	1
List of accompanying papers.			
Mr. Forsyth to Mr. Pollard, with an accompaniment, December 14, 1840	13	58	3
Mr. Pollard to the Secretary of State, March 18, 1841, extract	13	58	30
The same to Mr. Webster, with two accompaniments, July 7, 1841, extract	13	58	30
Mr. Pendleton to Mr. Webster, February 26, 1843, extract	13	58	33
The same to the same, with two accompaniments, August 24, 1843, extract	13	58	33
Mr. Pendleton to the Secretary of State, with two accompaniments, December 16, 1843, extract	13	58	46
The same to the same, with an accompaniment, January 17, 1844, extract	13	58	47
Mr. Upshur to Mr. Pendleton, February 21, 1844	13	58	50
Mr. Pendleton to the Secretary of State, with three accompaniments, March 1, 1844	13	58	51

Subject.	Vol.	No.	Page.
Messages from President—Accompanying papers—Cont'd.			
The Minister for Foreign Affairs to Mr. Pendleton, May 25, 1844	13	58	81
Mr. Pendleton to the Secretary of State, May 27, 1844	13	58	99
Mr. Pendleton to the Minister for Foreign Affairs, June 6, 1844	13	58	100
The Minister for Foreign Affairs of Chili to Mr. Pendleton, June 12, 1844	13	58	107
Mr. Cralle to Mr. Crump, October 30, 1844	13	58	108
Mr. Crump to the Secretary of State, with seven accompaniments, October 23, 1845	13	58	112
The same to the same, March 18, 1846, extract	13	58	111
The same to the same, September 6, 1846, extract	13	58	111
List of documents filed by the claimant and the Chilian government	13	58	125
Mr. Carvallo to Mr. Buchanan, November 28, 1846, translation, with translation of memorial and index, with accompaniments	13	58	135
Answer of the claimants, with accompaniments, as per index herewith	13	58	173
Mr. Buchanan to Mr. Gillett, April 27, 1848	13	58	302
Mr. Gillett to Mr. Buchanan, May 29, 1848	13	58	302
Mr. Buchanan to Mr. Carvallo, July 25, 1848	13	58	333
Mr. Carvallo to Mr. Buchanan, translation, with accompaniments, as per index, December 28, 1848	13	58	334
Mr. Hunter to Mr. Carvallo, May 24, 1852	13	58	393
Mr. Carvallo to Mr. Webster, August 26, 1852, translation	13	58	409
Mr. Webster to Mr. Carvallo, September 2, 1852	13	58	410
Mr. Carvallo to Mr. Everett, February 5, 1853, translation	13	58	411
The same to the same, February 17, 1853, translation	13	58	412
Mr. Everett to Mr. Carvallo, February 23, 1853	13	58	416
Mr. Carvallo to Mr. Everett, February 28, translation	13	58	420
Mr. Everett to Mr. Carvallo, March 3, 1853	13	58	423
Supplementary memorial of T. H. Perkins, March 6, 1853	13	58	426
Memorial of the executors of John S. Ellery, March 6, 1853	13	58	435
Synopsis of further proof, with four accompaniments	13	58	437
Mr. Carvallo to Mr. Marcy, May 31, 1853, translation	13	58	465
Mr. Marcy to Mr. Carvallo, June 2, 1853	13	58	466
Communicating information concerning the recent search or seizure of American vessels by foreign armed cruisers in the Gulf of Mexico	13	59	1
List of accompanying papers.			
Mr. Cass to Mr. Boston, April 3, 1858	13	59	9
Mr. Boston to Mr. Cass, April 7, 1858	13	59	8
Same to same, with accompaniment, April 22, 1858	13	59	7
Mr. Blythe to Mr. Appleton, with accompaniments, April 29, 1858	13	59	20
Mr. Cass to Lord Napier, May 4, 1858	13	59	2
Mr. Blythe to Mr. Cass, May 8, 1858	13	59	9
Mr. Cass to Mr. Dallas, extract, May 11, 1858	13	59	7
Same to same, May 12, 1858	13	59	19
Same to Mr. Toucey, May 13, 1858	13	59	6
Same to Mr. Schell, May 13, 1858	13	59	6
Same to Mr. Baker, May 14, 1858	13	59	7
Mr. Schell to Mr. Cass, May 15, 1858	13	59	14
Mr. Cass to Mr. Austin, May 15, 1858	13	59	14
Lord Napier to Mr. Cass, May 16, 1858	13	59	14
Mr. Schell to same, with accompaniments, May 17, 1858	13	59	15
Mr. Baker to same, with accompaniments, May 17, 1858	13	59	18
Mr. Cass to Mr. Schell, May 18, 1858	13	59	5

Subject.	Vol.	No.	Page.
Messages from President—Accompanying papers—Cont'd.			
Same to Mr. Austin, May 18, 1858	13	59	4
Same to Mr. Dallas, May 18, 1858	13	59	3
Same to Mr. Austin, May 19, 1858	13	59	5
Communicating correspondence in regard to the seizure of the American barque Panchita on the coast of Africa	13	61	1
List of accompanying papers.			
Mr. Cass to Mr. Dallas, with accompaniments, August 22, 1857	13	61	2
Mr. Dallas to Mr. Cass, with an accompaniment, September 21, 1857	13	61	8
Same to same, with accompaniments, October 9, 1857	13	61	13
Mr. Cass to Mr. Dallas, November 21, 1857	13	61	20
Mr. Schell to Mr. Cass, with an accompaniment, May 19, 1858	13	61	21
Mr. Austin to Mr. Cass, with an accompaniment, May 19, 1858	13	61	23
Mr. Cass to Mr. Austin, May 19, 1858	13	61	23
Mr. Schell to Mr. Cass, with accompaniments, May 20, 1858	13	61	24
Mr. Austin to Mr. Cass, with an accompaniment, May 21, 1858	13	61	26
Mr. Cass to Mr. Schell, May 22, 1858	13	61	27
Same to Mr. Austin, May 22, 1858	13	61	28
Same to Mr. Smart, May 22, 1858	13	61	28
Same to Mr. Mason, May 22, 1858	13	61	29
Same to Mr. Berry, May 22, 1858	13	61	29
Mr. Schell to Mr. Cass, with an accompaniment, May 24, 1858	13	61	30
Mr. Austin to same, May 25, 1858	13	61	31
Mr. Cass to Mr. Hatch, May 25, 1858	13	61	32
Mr. Mason to Mr. Cass, with an accompaniment, May 25, 1858	13	61	32
Mr. Austin to same, May 25, 1858	13	61	33
Same to same, with an accompaniment, May 26, 1858	13	61	34
Mr. Clinch to same, with an accompaniment, May 27, 1858	13	61	34
Communicating the correspondence in relation to the arrest of William Walker by the naval forces under the command of Commodore Paulding	13	63	1
List of accompanying papers.			
No. 1. January 2, off Aspinwall.—Commodore Paulding to the department. Reports arrival of the Fulton, with Colonel Anderson's party, captured by Captain Sands. Enclosures A, B, and C; list of names, &c. Will sail with filibusters for Key West, *via* San Juan, and there await orders as to their disposition	13	63	4
No. 2. January 15, Havana.—Commodore Paulding to department, reporting arrival. Was visited at San Juan by General Jerrez, who thanked him, in the name of the president of Nicaragua, for removing Walker and party from Punta Arenas	13	63	9
No. 3. January 18.—Department to Commodore Paulding, acknowledging despatches. Refers to his despatch (heretofore communicated to Congress) detailing capture of Walker, and transmits President's message explaining his views on the subject	13	63	9

Subject.	Vol.	No.	Page.
Message from President—Accompanying papers—Continued.			
No. 4. January 19.—Department to Commodore Paulding, acknowledging No. 1, and furnishes extract from letter of department of December 28, [18,] instructing him not to leave Aspinwall or neighborhood, under any circumstances, without further orders. Should this reach him at Key West, proceed, without delay, to New York	13	63	10
No. 5. January 20.—Department to Commodore Paulding, correcting a clerical error, as to date, in No. 4	13	63	11
No. 6. January 21, Key West.—Commodore Paulding to the department, reporting arrival, and enclosing certain papers of interest, marked A to F, in relation to transactions of Colonel Anderson and party, and list of arms taken from them	13	63	11
No. 7. January 25, Key West.—Commodore Paulding to the department. Prisoners taken by Captain Sands delivered to the custody of the marshal of this district. Should no orders reach him by the "Isabel," controlling his movements, will sail for Aspinwall. Department's letter of December 18, published in New York Herald, has not been received by him	13	63	14
No. 8. January 25.—Department to Commodore Paulding, acknowledging No. 2	13	63	14
No. 9. February 2.—Department to Commodore Paulding, acknowledging No. 7	13	63	15
No. 10. February 2.—Department to Commodore Paulding. Should Nos. 4 and 5 (copies of which are enclosed) failed to have reached him at Key West, and he has returned to Aspinwall, proceed immediately to New York, agreeably to instructions in No. 4	13	63	15
No. 11. February 3.—Department to Commodore Paulding, acknowledging No. 6, and enclosures	13	63	15
No. 12. February.—Commodore Paulding, at New York, to the department, detailing his recent movements, acknowledging No. 4, and reporting his arrival in obedience to it. Department's letter of December 18 not yet received, &c	13	63	15
No. 13. February 18.—Department to Commodore Paulding, detaching him from command of home squadron, and granting three months' leave. [Withdrawn by dep't]	13	63	16
No. 14. February 18.—Department to Commodore Paulding, detaching him from command of home squadron—having been over two years in command	13	63	16
No. 15. February 20.—Department to Commodore Paulding, acknowledging No. 12, and enclosing duplicates and triplicates of letters to him not yet acknowledged	13	63	17
No. 16. February 20.—Commodore Paulding to the department, acknowledging Nos. 13 and 14, detaching him from command of squadron; will haul down his broad pennant on the 22d; returns to the department No. 13, agreeably to request	13	63	17
No. 17. February 20.—Commodore Paulding to the department; asks what disposition shall be made of the stores and arms taken at Punta Arenas; relative to his responsibility, personally or otherwise, in breaking up Walker's camp and embarking his arms and stores; regrets that no sentiment entertained by the department as to his course has reached him; whilst his course seems to have met the approval of the country, he is made to feel that he has not secured the approbation of the department; would like an interview with the President and Secretary	13	63	17

Subject.	Vol.	No.	Page.
Message from the President—Accompanying papers—Continued.			
No. 18. February 12.—Commodore Paulding to department, acknowledging No. 15, also duplicates of letter of December 18, 1857, and Nos. 3, 4, and 10	13	63	18
No. 19. March 12.—Department to Commodore Paulding, in reply to No. 17, about the disposition of the stores captured from Walker, and his complaint that the department has not expressed its views of his course. His presence at Washington at this time not deemed necessary	13	63	19
No. 20. March 17.—Commodore Paulding to the department, enclosing its despatch of December 18, which has just reached him. Requests that the *envelope* may be placed on file, as the information it affords will exonerate him from the serious imputation of having disobeyed an order given by command of the President. Despatch was missent	13	63	19
No. 21. March 19—Commodore Paulding to the department, acknowledging No. 19, about disposition of stores, and views of department as to his course. Explanations: Letter of department enclosing President's message was not received when his letter of February 20 (No. 17.) was written. Misapprehended in supposing that his presence would be of importance in Washington. Made suggestion on public grounds alone	13	63	20
No. 22. March 27.—Department to Commodore Paulding, acknowledging No. 21. Commandant of New York instructed in relation to the stores and arms brought home in the Wabash	13	63	21
No. 23. April 1.—Department to Commodore Paulding, in reply to his letter (No. 20) enclosing despatch of department dated December 18, just received by him. Explanations in relation thereto; despatch returned, and *envelope* placed on file	13	63	21
Communicating a despatch from Governor Cumming relative to the termination of the difficulties with the Territory of Utah	13	67	1
Communicating a report of the Secretary of State, and accompanying correspondence with the Peruvian minister, in relation to the seizure of certain cargoes of guano purchased from Vivanco, his officers, or agents, while occupying certain guano islands within the territory of Peru	13	69	1
Accompanying papers.			
Mr. Osma to Mr. Cass, March 27, 1858	13	69	2
Mr. Cass to Mr. Osma, May 22, 1858	13	69	17
Mr. Black, Attorney General, to Mr. Cass, May 15, 1858	13	69	27
Communicating a report from the Secretary of State, with accompanying documents, together with the copy of a letter from the Postmaster General to the Department of State in relation to the grant of the Mexican government for the construction of a plank road and railroad across the Isthmus of Tehuantepec, as recognized in the treaty of Washington of June 30, 1854	13	72	1
List of accompanying documents.			
Mr. Letcher to Mr. Webster, (extract,) April 25, 1852	13	72	2
Same to same, (extract—enclosures,) no date	13	72	5
Mr. Rich to same, (extract,) August 31, 1852	13	72	11
Mr. Conrad to Mr. Conkling, (extract,) October 14, 1852	13	72	12

Subject.	Vol.	No.	Page.
Message from the President—Accompanying papers—Continued.			
Mr. Conkling to Mr. Everett, (extract,) November 23, 1852	13	72	14
Same to same, (extract,) February 2, 1853	13	72	15
Same to same, (extract,) same date	13	72	15
Same to same, (extracts,) February 3, 1853	13	72	16
Same to same, (extract—enclosures,) February 6, 1853	13	72	18
Same to same, (extract—enclosures,) February 22, 1853	13	72	27
Mr. Hargous to Mr. Marcy, May 7, 1853	13	72	29
Mr. Conkling to same, (extract,) May 14, 1853	13	72	31
Mr. Marcy to Mr. Gadsden, (extract,) July 15, 1853	13	72	32
Mr. Gadsden to Mr. Marcy, (extract—enclosure,) April 5, 1856	13	72	32
Mr. Hargous to same, April 21, 1856	13	72	35
Mr. Marcy to Mr. Forsyth, (extract,) August 16, 1856	13	72	36
Mr. Forsyth to Mr. Marcy, (enclosure,) November 15, 1856	13	72	36
Mr. Cass to Mr. Forsyth, (enclosure,) July 17, 1856	13	72	39
Mr. Forsyth to Mr. Cass, (extracts—enclosures,) September 15, 1856	13	72	50
Calling the attention of Congress to the condition of the Treasury, and recommending a postponement of the day of adjournment	13	68	1
Reports from the Secretary of State, viz:			
Showing the disbursements of the State Department during the fiscal year ending June 30, 1857, including disbursements for contingent expenses of foreign intercourse	1	2	1
Communicating an abstract of returns of American seamen	1	3	1
Transmitting the annual report of passengers arriving in the United States	7	32	1
On commercial relations (in quarto)	16	53	1
Communicating correspondence with Governors Walker and Denver, and Secretary Stanton, of Kansas Territory, in relation to the affairs of that Territory	1	8	1
Communicating correspondence on the subject of losses claimed to have been sustained by British and French subjects at the bombardment of Greytown	1	9	1
Communicating correspondence with the minister of Bremen in relation to alleged losses sustained by subjects of the Hanse Towns at the bombardment of Greytown	1	10	1
Communicating correspondence with the commander of the United States steamer "Water Witch" and the authorities of the republic of Paraguay, in relation to the ratification of the treaty with that republic	2	11	35
Communicating correspondence with American ministers at the courts of England, France, Switzerland, and other powers, on the subject of dangers to emigrants from the practice of contracting with irresponsible persons in Europe for American inland passage tickets	7	26	1
Communicating a copy of instructions to Mr. Reed, commissioner of the United States to China	12	47	1
Communicating correspondence with the British authorities in relation to the African slave trade	12	49	1
Accompanying papers.			
Mr. Crampton to Mr. Marcy, with an accompaniment, May 24, 1856	12	49	2
Lord Napier to Mr. Cass, with an accompaniment, August 2, 1857	12	49	3
Same to same, with accompaniments, September 16, 1857	12	49	5
Captain Conover to Mr. Toucey, with accompaniments, October 19, 1857	12	49	10

Subject.	Vol.	No.	Page.
Reports from the Secretary of State—Accompanying papers—Cont'd.			
Lord Napier to Mr. Cass, with accompaniments, December 24, 1857	12	49	11
Same to same, with an accompaniment, December 26, 1857	12	49	29
Same to same, with accompaniments, January 7, 1858	12	49	30
Same to same, with accompaniments, January 17, 1858	12	49	34
Same to same, February 28, 1858	12	49	39
Mr. Cass to Mr. Hatch, March 8, 1858	12	49	39
Mr. Hatch to Mr. Cass, March 18, 1858	12	49	40
Mr. Cass to Lord Napier, April 10, 1858	12	49	42
Mr. Mason to Mr. Cass, with an accompaniment, February 19, 1858	12	49	55
Communicating the correspondence with the Peruvian minister in relation to the boarding and detention of the American vessel the "Dorcas C. Yeaton," by the Peruvian armed steamer the "Tumbes," and the capture of two other American vessels, the "Georgiana" and "Lizzie Thompson"	13	69	1
Communicating information as to whether any efforts have been made by the authority of the Executive department to induce the Mexican government to annul or impair the grant of February 5, 1853, for the construction of a plank road or railroad across the Isthmus of Tehuantepec, as recognized in the treaty of June 30, 1854, and to obtain a new grant of like character for other parties	13	72	1
Reports from the Secretary of the Treasury, viz:			
On the state of the finances	1	1	3
Accompanying documents, viz:			
Statement of the receipts and expenditures for the year ending the 30th June, 1857	1	1	33
Statement of the receipts and expenditures for the quarter of the fiscal year ending 30th September, 1857	1	1	38
Statement of the exportations from and importations into the United States of certain articles during the quarter ending September 30, 1857	1	1	38
Statement of the amount of importations annually, from July 1, 1849, to 1857; the amount of customs each year, and the expenses of collection during the same period	1	1	40
Statement of the expenses of collection in the Pacific ports, from July 1, 1850, to June 30, 1857	1	1	40
Statement of the amount of the public debt on the 1st July, 1857; the amount paid and redeemed since, and the amount outstanding November 17, 1857	1	1	41
Statement of the amount of the public debt on the 3d March, 1857; the amount redeemed and paid to July 1, 1857; the amount since, and the total amount redeemed and paid, and the amount outstanding November 17, 1857	1	1	42
Statement of periods when the United States stock is redeemable; the amount redeemed, and Texas debt paid since the 3d March last; the amount of interest to maturity, and the amount saved by anticipating the day of payment	1	1	43
Statement of the capital paid in; the amount of debt due; the net income; annual interest on debt, and available income of the railroads of the United States for the year 1857	1	1	44

Subject.	Vol.	No.	Page.
Reports from Secretary of the Treasury—Continued.			
Statement of the deposits and coinage at the Mint of the United States, branches, and assay office during the first six months of 1857; report of the director of the Mint, and explanatory tables	1	1	46
Circular instructions to the Treasurer of the United States, the assistant treasurers of the United States, the treasurers of the Mint and the branch mints, charged by law with the duties of assistant treasurers and the public depositaries, designated under the 15th section of the act of August 6, 1846	1	1	78
Circular instructions to the disbursing officers and disbursing agents employed under the direction of the Treasury Department	1	1	79
Letter of the Secretary of the Treasury to the First Auditor, respecting the contingent fund of the House of Representatives	1	1	82
Report of the engineer in charge on construction of custom-houses, court-houses, post offices, marine hospitals, and other public buildings, confided to the charge of the Treasury Department	1	1	90
Statement of the receipts and expenditures of the marine hospital fund for the relief of sick and disabled seamen in the ports of the United States for the fiscal year ending June 30, 1857	1	1	138
Report on the condition of the Louisville and Portland canal	1	1	149
Report of the First Auditor on the operations of his office	1	1	151
Report of the Second Auditor on the operations of his office	1	1	153
Report of the Third Auditor on the operations of his office	1	1	154
Report of the Fourth Auditor on the operations of his office	1	1	162
Report of the Fifth Auditor on the operations of his office	1	1	163
Report of the Sixth Auditor on the operations of his office	1	1	165
Report of the First Comptroller on the operations of his office	1	1	170
Report of the Second Comptroller on the operations of his office	1	1	171
Report of the Commissioner of Customs on the operations of his office	1	1	174
Report of the Treasurer on the operations of his office	1	1	177
Report of the Solicitor on the operations of his office	1	1	179
Report of the Register on the operations of his office	1	1	184
Report of supervising inspectors of steamboats	1	1	212
Report of the Light-house Board	1	1	229
Statement of amount due under treaties with various Indian tribes payable on time	1	1	260
Statement of amount of stock held in trust by the United States for several of the Indian tribes, and Smithsonian Institution	1	1	270
Statement of balance of various other trust funds	1	1	271
Statement of the gold and silver coinage at the Mint of the United States annually, from its establishment in 1792, and including the coinage of the branch mints and the assay office (New York) from their organization to September 30, 1857	1	1	272
Statement of the amount of coin and bullion imported and exported annually from 1821 to 1857, inclusive; also the amount of importation over exportation, and of exportation over importation, during the same years	1	1	274
Statement of the gross value of exports and imports from the beginning of the government to June 30, 1857	1	1	275
Statement of the amount of the tonnage of the United States, annually, from 1789 to June 30, 1857; also the registered and enrolled and licensed tonnage employed in steam navigation each year	1	1	277

Subject.	Vol.	No.	Page.
Reports from the Secretary of the Treasury—Continued.			
Statement of the revenue collected from the beginning of the government to June 30, 1857, under the several heads of customs, public lands, and miscellaneous sources, including loans and treasury notes; also the expenditures during the same period, and the particular tariff, and price of lands under which the revenue from those sources was collected	1	1	279
Statement of the value of manufactured articles of domestic produce exported to foreign countries from June 30, 1845, to June 30, 1857	1	1	282
Statement of the value of foreign merchandise imported, re-exported, and consumed annually, from 1821 to 1857, inclusive; and also the estimated population and rate of consumption *per capita* during the same period	1	1	284
Statement of the total value of imports, and the imports consumed in the United States, exclusive of specie, during each fiscal year from 1821 to 1857; showing also the value of foreign and domestic exports, exclusive of specie, and the tonnage employed during the same periods	1	1	285
Summary view of the exports of domestic produce, &c., of the United States annually from 1847 to 1857, inclusive	1	1	287
Statement of the value of certain articles imported annually from June 30, 1844, to June 30, 1857, (after deducting re-exportations,) and the amount of duty which accrued on each during the same periods, respectively	1	1	288
Statement of the value of foreign merchandise and domestic produce, &c., exported annually from 1821 to 1857, inclusive	1	1	292
Statement of the quantity of wine, spirits, &c., imported annually from 1843 to 1857, inclusive	1	1	294
Statement of the value of imports annually from 1821 to 1857	1	1	296
Statement of the value of dutiable merchandise re-exported annually from 1821 to 1857, inclusive; and showing also the value re-exported from warehouse, under act of August 6, 1846	1	1	297
Statement of the aggregate value of breadstuffs and provisions exported annually from 1821 to 1857	1	1	298
Statement of the quantity and value of cotton exported annually from 1821 to 1857, inclusive, and the average price per pound	1	1	299
Statement of the quantity and value of tobacco and rice exported annually from 1821 to 1857, inclusive	1	1	300
Statement of the values of iron and manufactures of iron, and iron and steel, steel, wool and manufactures of wool, manufactures of cotton, silk and manufactures of silk, flax, linen and linen fabrics, hemp and manufactures of hemp, manila, sun and other hemps of India, and silk and worsted goods, imported from and exported to foreign countries from 1840 to 1857, inclusive; and also showing the domestic exports of like articles for the same periods	1	1	302
Statement of the value of iron, manufactures of iron and iron and steel, steel, sugar, wines, and all fabrics of which wool, cotton, silk, flax, or hemp is a component part, imported annually from 1847 to 1857, inclusive, with the duties which accrued thereon during each year, respectively, and brandies for the years 1856 and 1857	1	1	309

Subject.	Vol.	No.	Page.
Reports from the Secretary of the Treasury—Continued.			
Statement of the exports to and imports from Canada and other British possessions in North America from the 1st July, 1851, to the 30th June, 1857	1	1	313
Statement of the amount of goods in warehouse on July 1, 1856, and on the first of each succeeding month, until July 1, 1857	1	1	314
Synopsis of the returns of the banks in the different States at the dates annexed	1	1	317
Comparative view of the condition of the banks in different sections of the Union in 1853–'54, 1854–'55, 1855–'56, and 1856–'57	1	1	321
General statement of the condition of the banks, according to returns dated nearest to January 1, 1857	1	1	324
Comparative view of the condition of the banks of the United States, according to returns nearest to January 1, 1837, 1841, 1842, 1843, 1844, 1845, 1846, 1847, 1848, 1849, 1850, 1851, 1854, 1855, 1856, and 1857	1	1	326
Statement of the amount of moneys in the United States treasury, amount of drafts outstanding, amount subject to draft, amount of receipts, and amount of drafts paid, as shown by the Treasurer's weekly exhibits, rendered during the year ending June 30, 1857	1	1	328
Statement of the quantity and value, value per bushel, pound, &c., of certain articles imported in 1856 and 1857, with the increase or decrease in quantity and value of 1857 as compared with 1856	1	1	329
Statement of the quantity and value of pig iron produced in the United States from 1820 to 1855, inclusive, together with the foreign imports and exports; domestic exports; consumption of foreign imports; consumption of foreign imports, less domestic exports of iron and iron and steel, and the manufactures thereof, and the total consumption of domestic iron and imports of iron and steel, and the manufactures thereof, in the United States, annually, for the last 35 years	1	1	330
Statement of the values of home production and importations of iron in the United States, with the increase or decrease compared with the preceding year, from 1824 to 1857, inclusive; the different tariffs under which the aforesaid production and importations were made; aggregate values of production and importations during the operation of each tariff; increase, less decrease, of the same, and the annual average of the same exhibits	1	1	332
Statement of the quantity and value of anthracite coal sent to market from the different regions in Pennsylvania from the commencement of the trade, in 1820, to 1856, inclusive, together with the foreign imports and exports; consumption of foreign imports; consumption of foreign imports, less domestic exports, and the total consumption of domestic coal, (reaching market,) and foreign imports thereof, for the last 32 years	1	1	334
Comparative statement of the United States tariffs of 1846 and 1857	1	1	336
Comparative statement of the import duty on United States domestic exports to Great Britain, France, Spain, Holland, Belgium, and Brazil; also the duty on like articles imported into the United States	1	1	364

Subject.	Vol.	No.	Page.
Reports from the Secretary of the Treasury—Continued.			
Statement of the number of American and French steam and sailing vessels engaged in trade between the United States and France, and *vice versa*; also those (steam vessels) in contemplation; the number of 200-horse power and upwards, tonnage, crews, and the aggregate entered and cleared at the ports of Boston, New York, and New Orleans, during the fiscal year ending June 30, 1857	1	1	379
Communicating copies of accounts of persons charged with the disbursement or application of moneys, goods, or effects for the benefit of the Indians, during the year ending June 30, 1857, together with a list of the names of the persons to whom goods, moneys, or effects have been delivered during that period	7	20	1
Communicating a statement of the amount of revenue collected in each collection district for each of the years 1852 to 1857, inclusive, the amount expended, and the number of persons employed in its collection during those years	7	25	1
Communicating information in relation to the printing, binding, and paper ordered by Congress for each year, beginning with December, 1845, and ending with March 4, 1857	7	27	1
Communicating statements of the amount paid annually during the last five years for printing for the executive departments	12	50	1
In relation to the present condition of the finances of the government, and recommending a resort to loans	13	60	1
In relation to the appointment and compensation of Alexander G. Penn and Emile La Sere as disbursing agents at New Orleans	13	64	1
Communicating information in relation to the fees or charges that the consul general for Canada is authorized to make and receive on goods or articles imported into the United States from Canada	13	71	1
Communicating statements of the commerce and navigation of the United States during the year ending June 30, 1857	14	------	1
Accompanying papers.			
General statement of the exports of domestic produce, the quantity and value shipped to each country, the amount in American vessels, and the aggregate value	14	------	8
Summary of the same, with the articles and their value, classified under the several heads of production	14	------	52
General statement of articles of foreign merchandise exported, and the quantity and value shipped to each country	14	------	56
Summary of the value of foreign merchandise exported, with the amount in American vessels, in foreign vessels, and the aggregate value	14	------	142
General statement of imports, the countries from whence imported, with the quantity and value of each class of merchandise	14	------	152
Summary of the value of imports in American vessels, in foreign vessels, the value from each country, and the aggregate value	14	------	272
Statements of the quantity and value of domestic produce exported from each collection district of the country	14	------	284
Statement of the quantity and value of foreign merchandise exported from and imported into each collection district	14	------	328 370
Statements of American and foreign vessels cleared and entered	14	------	490 494
Statement of the tonnage and national character of foreign vessels entered and cleared	14	------	498
Statistical views of the commerce of the United States, and of each State and Territory	14	------	510 514

Subject.	Vol.	No.	Page.
Reports from the Secretary of the Treasury—Continued.			
Statements of tonnage of American and foreign vessels cleared from and entered into each district	14	------	518 522
Statements of countries to which and from which American and foreign vessels cleared from and arrived in each district	14	------	526 552
General and summary statements of indirect imports	14	------	578 608
Statement of the tonnage of the several districts of the United States, and condensed view of the same	14	------	612 620
Statement of the number and class of vessels built in 1857	14	------	624
Comparative view of the registered and enrolled tonnage from 1815 to 1857	14	------	632
Statement of the number and class of vessels built from 1815 to 1857	14	------	636
Communicating the annual report on the coast survey, (in quarto)	15	33	1
Reports from the Secretary of the Interior, viz:			
Communicating a statement of the appropriations for the service of the Interior Department for the fiscal year ending June 30, 1857	1	6	1
Accompanying the President's annual message on the state of the Union, (part 1,) with statements of the operations of the Interior Department	2	11	57
Communicating the report of John Claiborne, esq., special agent appointed to collect statistics on the consumption of cotton in Europe	7	35	1
Communicating information in relation to the progress of the Report of Major Emery on the United States and Mexican Boundary Survey	12	37	1
Communicating the report of J. Ross Browne on the late Indian war in Oregon and Washington Territories	12	40	1
Communicating information relative to the United States reserved sections in township 89, range 47, in the State of Iowa	12	51	1
Upon claims for depredations by Indians in the Territory of New Mexico	12	55	1
In relation to the claim of the St. Regis Indians to land in Kansas	13	73	1
Reports from the Secretary of War, viz:			
Transmitting an estimate for a fort at New Inlet, North Carolina	1	7	1
On the operations of the War Department, relating to the army, Utah expedition, the staff, report of general-in-chief, Indian hostilities, railroad to the Pacific, explorations and surveys, military roads and reserves, artesian wells, military asylum, national foundry, ordnance, national defences, pensions, military bands, Oregon and Washington claims, breech-loading arms, topographical bureau, aqueduct, Capitol and Post Office extension, and Quartermaster General's bureau, accompanying the President's annual message, (part 2)	3	11	1
Accompanying documents			
Report on the Utah expedition	3	11	21
Report from the Bureau of Explorations and Surveys	3	11	38
Report on the Capitol extension, reconstruction of dome, and Post Office extension	3	11	40
Report of the Commanding General of the army	3	11	48
Report of the Adjutant General of the army	3	11	58
Report of the Quartermaster General of the army	3	11	153
Report of the Commissary General of the army	3	11	161

Subject.	Vol.	No.	Page.
Reports from the Secretary of War—Continued.			
Report of the Paymaster General of the army	3	11	162
Report of the Surgeon General of the army	3	11	165
Report of the Chief Engineer	3	11	168
Report of the Chief Topographical Engineer	3	11	283
Report of the Chief of Ordnance	3	11	535
Communicating estimates for the improvement of certain harbors on Lake Erie	1	15	1
Communicating estimates for certain rivers and harbors in the State of New York	1	16	1
Transmitting a statement of expenditures for contingent expenses of the War Department, its offices and bureaus, during the year ending June 30, 1857	6	18	1
Communicating a statement of the number of troops stationed in Kansas for each quarter from January 1, 1855, down to December 31, 1857	7	22	1
Communicating a statement of amount expended under the direction of the Engineer Department, for the support of the Military Academy during the year 1857	7	23	1
Communicating the report of the commission on the war claims of Oregon and Washington Territories	7	24	1
Communicating a statement of the appropriations applicable to the War Department during the fiscal year 1856 and 1857, the amount drawn by requisitions, the balances on the 1st of July, 1857, and such appropriations as have been carried to the surplus fund	7	29	1
Communicating a statement of contracts made under the authority of the War Department during the year 1857	7	31	1
Communicating a report of Captain Woodruff, of the Topographical Bureau, of the survey and examination of the channel of the Potomac river, in the vicinity of Georgetown and Washington city, accompanied by a chart thereof	7	34	1
Communicating lists of clerks and other persons employed in the War Department, other than officers of the army during the year 1857	12	36	1
Communicating a statement showing what officers of the army belonging to the several regiments in service in the field, or at remote or frontier stations, are now absent from duty, and the cause of such absence in each case	12	39	1
Communicating a statement of the expenses of the armories, and of the number of arms and appendages made and altered thereat, during the year ending June 30, 1857	12	41	1
Communicating the report of Lieut. Col. Graham in relation to the improvement of harbors on the northern and northwestern lakes, with copies of the maps therein referred to, except those of the harbors of New Buffalo and Chicago, to be transmitted as soon as received from him	12	42	1
Communicating a report of Edward F. Beale of his exploration for a wagon road from Fort Defiance, in New Mexico, to the western borders of California	12	43	1
Communicating a letter from the Chief of the Bureau of Yards and Docks, with a list of contracts made under its cognizance for furnishing naval supplies for the fiscal year ending June 30, 1858	12	44	1
Communicating information in reference to the sale of the military reservation at Fort Crawford	12	45	1
Communicating a copy of the contract made with Russell, Majors, & Waddell, for beef cattle; and also a statement of contracts made by the department, or under its authority, during the present session of Congress, in connexion with the Utah expedition, without public notice	12	46	1

Subject.	Vol.	No.	Page.
Reports from the Secretary of the Navy, viz:			
On the operations of the Navy Department during the past year relating to the movements and stations of the different squadrons and government vessels; return to the British government of the barque Resolute, late of the Arctic expedition; manning and arming the ordnance ship Plymouth; a code of regulations for the navy; survey of the Atrato and Truando rivers with a view to a ship canal between the Atlantic and Pacific oceans; exploration of the Parana, and the tributaries of the Paraguay river; late expedition to the North Pacific and Behring's Straits; the additional force of the navy; marine barracks at Brooklyn and Pensacola; condition of the marine barracks at Boston, Philadelphia, and Norfolk; coal depot at Key West; war steamer building at Hoboken; naval depot at Blythe island; Naval Academy at Annapolis; medals to Doctor Kane and officers and men; naval court of inquiry; shortening the period of cruises in remote seas; increase of landsmen and boys in national ships; the five steam sloops authorized to be built; appropriation for testing improvements; reports of navy bureaus; estimates, expenditures, &c., accompanying the President's annual message, part 3	4	11	573
Documents accompanying the above.			
List of deaths, resignations, and dismissals since the last report	4	11	588
Report of the annual board of naval officers of the examination of the organization and condition of the Naval Academy at Annapolis	4	11	593
Report of the superintending engineer of the coal depot for naval purposes at Key West, and his estimate for its completion	4	11	596
Letter of superintendent of Naval Academy, and report of Commandant Green, of midshipmen, of the cruise of the practice ship Preble	4	11	598
Report of the superintendent of the Nautical Almanac relating to its progress	4	11	600
Report of Commander Dahlgreen of the cruise of the ordnance ship Plymouth	4	11	603
Estimate for support of office of Secretary of the Navy for the fiscal year ending June 30, 1859	4	11	621
Report and detailed estimates of Bureau of Yards and Docks	4	11	623
Report and detailed estimates of Bureau of Ordnance and Hydrography, including those of Naval Observatory and Naval Academy	4	11	791
Report and detailed estimates of Bureau of Construction, Equipment, and Repair	4	11	802
Report and detailed estimates of the Bureau of Provisions and Clothing	4	11	900
Report and detailed estimates of Bureau of Medicine and Surgery	4	11	927
Report of the commandant of the marine corps, and detailed estimates from the paymaster and quartermaster of the corps	4	11	938
General estimate of the office of the Secretary of the Navy, and the several bureaus of the Department	4	11	944
General estimate of the southwest executive building	4	11	944
Summary statement of the estimates for the navy, the marine corps, and special objects	4	11	945
General estimate for the support of the navy	4	11	948

Subject.	Vol.	No.	Page.
Reports from Secretary of the Navy—Continued.			
General estimate for the support of the marine corps	4	11	949
General estimate for the special objects under the Navy Department	4	11	950
Second Comptroller's statement of the appropriations for the Navy Department, viz: balances of appropriations on 1st of July, 1856; appropriations for the fiscal year 1856–'57; repayments and transfers in the same time; the amount applicable to the service of the year 1856–'57; the amount drawn by requisition from the treasury in the same period; and the balances on the 30th June, 1857, with the sums specially designated that have been carried to the surplus fund	4	11	952
Abstract of expenditures under the head of "contingent expenses" settled and allowed at the office of the Fourth Auditor of the Treasury from July 1, 1856, to June 30, 1857, inclusive	4	11	956
Communicating a statement of the number and tonnage of government vessels employed in the Pacific ocean; also private vessels employed by the government in transporting coal or other supplies for the United States, and the annual expense thereof	12	38	1
Communicating information in relation to the condition of the United States ship Susquehanna on her arrival at the island of Jamaica, and the reception and assistance extended to her officers and crew by the British authorities at that island	12	48	1
Communicating information in relation to the publication of the results of the United States naval exploring and surveying expedition to the North Pacific ocean and China seas; and also of the results of the United States naval expedition to the La Plata river	12	52	1
Communicating information as to the measures taken for the establishment of a naval depot on Blythe island, Georgia	12	57	1
Communicating information concerning the pay of the retired naval officers whose cases were acted upon by the late naval courts of inquiry and the President, and who have been advanced to a higher grade or position as to pay, though not restored to the active list, than that assigned them by the late "retiring board," together with a list of such officers, with the positions assigned them by the said board, and those now held by them	13	62	1
Communicating information as to the time at which each of the vessels of the navy were built, the original cost thereof, the cost of repairs, and their present condition, &c	13	70	1
Communicating instructions to Commodore McCauley, commander of the home squadron, (end of volume 13)	13	1	Sp. ses.
Reports from the Postmaster General, viz:			
On the operations of the Post Office Department, relating to the number of post offices established, with those discontinued at different periods showing their increase, &c; transportation statistics; extension of railroad service; revenue and expenditures; estimates of receipts and expenditures in 1858; remittance of small amounts through the mails by orders drawn by postmasters on each other; increase of number and amount of money orders issued in Great Britain and Ireland every fifth year since 1840; ocean steamship and foreign mail arrangements; city posts; express agents; New Orleans and New York route; mail service on the Mississippi river below the Ohio; fines; claim of George Chor-			

Subject.	Vol.	No.	Page.
Reports of the Postmaster General—Continued.			
penning, jr.; overland mail service to California, with an abstract of the bids; contract with John Butterfield and others, and relative merits of the different routes proposed; re-examination of the questions arising out of fines imposed on contractors on route from New Orleans to Cairo; mail service abroad; New York and Liverpool, New York and Chagres, and Astoria and Panama lines; postal convention and mail arrangement with France; postal convention with Hamburg	4	11	961
Accompanying documents.			
Statement showing the character of the service, number of miles of transportation, and the cost thereof, as it stood at the close of the year	4	11	1052
Statement showing the number of mail routes in operation, the number of mail contractors, route agents, local agents, and mail messengers in the service of the Department on the 30th June, 1857	4	11	1054
Statement of the service of the New England and New York sections as it stood at the close of the contract year, June 30, 1857, and at the close of the 1st quarter of the current year	4	11	1054 1055
Statement of railroad service as in operation June 30, 1857; also the cost per mile in each State	4	11	1056
Statement of railroad and steamboat service for the current year, showing the particulars of each railroad and steamboat route	4	11	1068 1080
Report of the Auditor of the Post Office Department, with statements relating to its revenue derived from foreign and domestic postages, with stated postage accounts between the United States and foreign governments; receipts from the several lines of steamers; classification of suits to recover balances due from postmasters, &c.	4	11	1083
In relation to lists of post offices, regulations, &c., published by George S. Gideon in 1855, and by John C. Rives in 1857	13	65	1
In relation to the authority of a postmaster to refuse to deliver letters to a person authorized to receive them by the person to whom the letters are addressed	13	66	1
SUBORDINATE DEPARTMENTS, VIZ:			
Reports from the Commissioner of the General Land Office, viz:			
On the operations of the General Land Office during the fiscal year ending June 30, 1857, and for the quarter ending September 30, 1857, (part 1)	2	11	78
(*Schedule of accompanying papers page* 101 *of the above.*)			
A.—Statement of lands sold, &c., in the first half of the fiscal year ending June 30, 1857	2	11	102
B.—Similar statement for second half of said fiscal year	2	11	108
C.—Estimate of appropriations for office of Commissioner of the General Land Office	2	11	114
D.—Estimate of contingent appropriations for same	2	11	115
E.—Estimate of appropriations for surveying department	2	11	115
F.—Estimate of appropriations for surveying public lands	2	11	117
G.—Estimate of same for supplying deficiencies	2	11	118
H.—Reports of Surveyor's General, and accompanying documents	2	11	119

Subject.	Vol.	No.	Page.
Report from the Treasurer of the United States, viz:			
Copies of his accounts for the third and fourth quarters of the year 1856, and the first and second quarters of the year 1857	6	19	1
Reports from the Commissioner of Patents, viz:			
On the operations of the Patent Office during the year ending December 31, 1857, (Mechanical, part 1)	8	30	1
On the operations of the Patent Office during the year ending December 31, 1857, (Mechanical, part 2)	9	30	1
On the operations of the Patent Office during the year ending December 31, 1857, (Mechanical, part 3)	10	30	1
On the operations of the Agricultural department of the Patent Office during the year ending December 31, 1857, (part 4)	11	30	1
Reports from the Commissioner of Pensions, viz:			
On the operations of the Pension Office for the past year, accompanying the President's annual message on the state of the Union, (part 1)	2	11	698
(*List of accompanying papers at page* 698 *of the above.*)			
Report of the Superintendent of Public Buildings, viz:			
Showing the condition and improvements of the public buildings during the year 1857	1	4	1
Reports of the Commissioner of Indian Affairs, viz:			
Accompanying the President's annual message, (part 1,) showing the operations of the Office of Indian Affairs, with accompanying reports and statements from the several superintendents, agents, and school teachers in regard to the condition and prospects of the various Indian tribes	2	11	289
Accompanying reports, &c.			
New York agency. Reports, &c., of the— No. 1. Marcus H. Johnson, agent for the Indians in the State of New York; 2. Philip E. Thomas respecting the Seneca Indians; 3. N. H. Parker, interpreter, as to the condition of the Senacas at Cattaraugus; 4. To the "Society of Friends," by a committee of said society, respecting the Indians of New York	2	11	308
Mackinac agency. Reports, &c., of the— No. 5. A. M. Fitch, agent for the Indians in the State of Michigan; 6. N. F. Murray, teacher at Sheboygan; 7. Timothy Hegney, teacher at Grand Portage; 8. Stephen D. Caley, teacher at L'Anse; 9. William O'Donovan, teacher at Garden island; 10. John B. Weikamp, teacher at Cross Village	2	11	315
Agency for the Indians in the vicinity of Green bay. Reports, &c., of the— No. 11. Frederick Moscowitt, agent for the Indians in that vicinity; 12. Joseph M. Ostrop, teacher of music to the Menomonees; 13. Jane Dousman, teacher to the Menomonees; 14. Rosalie Dousman, teacher to the Menomonees; 15. Frederick Haas, farmer to the Menomonees	2	11	328
Northern Superintendency. Reports, &c., of the— No. 16. William J. Cullen, superintendent; 17. David B. Herriman, agent for the Chippewas of the Mississippi; 18. Charles E. Flandrau, agent for the Sioux; 19. James Mag-			

Subject.	Vol.	No.	Page.
Reports of the Commissioner of Indian Affairs—Continued. ner, farmer to the Lower Sioux; 20.* Captain Bernard E. Bee, United States army; 21. Superintendent Huebschmann; 22. Superintendent Huebschmann; 23. Agent Flandrau to newspaper "Pioneer and Democrat"; 24. Agent Flandrau to Superintendent Huebschmann; 25. Superintendent Huebschmann to Governor Medary; 26. Superintendent Huebschmann to Colonel Alexander, United States army; 27. Agent Flandrau; 28. Commissioner of Indian Affairs to Superintendent Cullen: 29. Superintendent Cullen to Commissioner Indian Affairs; 30. Commissioner of Indian Affairs to Superintendent Cullen; 31. Commissioner of Indian Affairs to Agent Flandrau; 32. Commissioner of Indian Affairs to K. Pritchette, appointing him special agent; 33. Superintendent Cullen; 34. Special Agent Pritchette; 35. Special Agent Pritchette; 36. Special Agent Pritchette; 37. Special Agent Pritchette; 38. A. J. Campbell, interpreter; 39. Individual Indians; 40. Ta-te-yoh-he; 41. Se-see-toan and Wahpay-toan warriors; 42. From Superintendent Cullen; 43. To Superintendent Cullen; 44. Special Agent Pritchette; 45. To Special Agent Pritchette; 46. To Superintendent Cullen; 47. Special Agent Pitchette; 48. Superintendent Cullen; 49. Special agent Pritchette; 50. First council held with Sioux; 51. Second council held with Sioux; 52. Third council held with Sioux; 53. Jonathan E. Fletcher, agent for the Winnebagoes	2	11	334
Central Superintendency. Reports, &c., of the— No. 54. Alfred Cumming, superintendent; 55. Alfred J. Vaughan, agent for the Blackfeet Indians; 56. A. H. Redfield, agent for the Indians of the Upper Missouri; 57. Malcolm Clarke, relative to certain conduct of a party of Assinaboines; 58. "Long Hair," chief of the Gros Ventres; 59. Thomas S. Twiss, agent for the Indians of the Upper Platte; 60. Robert C. Miller, agent for the Indians on the Arkansas; 61. Col. Sumner, United States army, to Agent Miller; 62. John B. Robertson, agent for the Omahas; 63. Charles Sturgiss, superintendent of Omaha school; 64. Wm. W. Dennison, agent for the Ottoes and Missourias and Pawnees; 65. D. A. Murdock, superintendent of the Ottoe and Missouria school; 66. John Lorton, farmer to the Ottoes and Missourias; 67. Daniel Vanderslice, agent for the Iowas and the Sacs and Foxes of the Missouri; 68. S M. Irvin, superintendent of the Iowa and Sac and Fox mission; 69. Royal Baldwin, agent for the Kickapoos; 70. E. M. Hubbard, superintendent of the Kickapoo mission; 71. B. F. Robinson, agent for the Delawares; 72. John G. Pratt, superintendent of the Delaware school; 73. A. Arnold, agent for the Shawnees and Wyandotts; 74. Simon D. Harvey, superintendent of "Friends'" mission to the Shawnees; 75. Thomas Johnson, superintendent of the Shawnee Methodist school; 76. Wm. E. Murphy, agent for the Pottawatomies; 77. J. B. Deurinck, superintendent of the St. Mary's Pottawatomie manual labor school; 78. John Jackson, superintendent of the Baptist Pottawatomie manual labor school; 79. Burton A. James, agent for the Sacs and Foxes of the Mississippi; 80. Jno. Montgomery, agent for the "Kaws," or Kansas Indians; 81. Maxwell McCaslin, agent for the Weas and Piankeshaws, Kaskaskias and Peorias, and Miamies	2	11	405

* NOTE.—Papers from No. 20 to No. 52, inclusive, relate to the massacre at Spirit Lake by a party of Sioux.

Subject.	Vol.	No.	Page.
Reports of the Commissioner of Indian Affairs—Continued.			
Southern superintendency. Reports, &c , of the—			
No. 82. Elias Rector, superintendent; 83. Andrew J. Dorn, agent for the Osages, Quapaws, Senecas and Shawnees, and Senecas; 84. John Shoenmakers, superintendent of the Osage manual labor school; 85. J. L. French, farmer for the Quapaws; 86. George Butler, agent for the Cherokees; 87. D. D. Hitchcock, marshal of Cherokee temperance society; 88 S. A. Worcester, missionary to the Cherokees; 89. W. A. Duncan, superintendent of Cherokee public schools; 90. John Ross, principal chief of the Cherokees, to the national council; 91. Wm H Garrett, agent for the Creeks; 92. Josiah W. Washburn, agent for the Seminoles; 93. John Lilley, superintendent of the Seminole mission; 94. Douglas H. Cooper, agent for the Choctaws and Chickasaws; 95. Cyrus Byington, missionary to the Choctaws at Stockbridge; 96. O. P. Stark, missionary to the Choctaws at Good Land station; 97. C. C. Copeland, missionary to the Choctaws at Bennington station; 98. William and Lewis Cass and Simon Hancock, native Baptist preachers; 99. J. D. Chamberlain, superintendent of Iyanubi female seminary; 100. H. Balentine, superintendent of Koonsha female academy; 101. C. Kingsbury, superintendent of the Chuahla female seminary; 102. T. W. Mitchell, superintendent of Fort Coffee and New Hope academies; 103. Ebenezer Hotchkin, missionary, and principal of the Living Land school; 104. John Edwards, superintendent of Wheelock female seminary; 105. Gaylord L. More, superintendent of Spencer academy; 106. W. R. Baker, superintendent of Armstrong academy; 107. J. H. Carr, superintendent of Bloomfield Chickasaw academy; 108. J. C. Robinson, superintendent of Chickasaw manual labor academy; 109. F. M. Paine, teacher in Chickasaw manual labor school; 110. E. Canch, superintendent of the Colbert institute; 111. A. H. Mc Kissick, agent for the Wichitas and other wild tribes	2	11	479
Texas agency. Reports, &c., of the—			
No. 112. Robert S. Neighbors, supervising agent for the Indians in Texas; 113. Supervising Agent Neighbors to Major General Twiggs; 114. M. Leper, agent for the Indians of the Comanche agency; 115. S. P. Ross, agent for the Indians of the Brazos agency; 116. Samuel Church, farmer at the Brazos agency; 117. Jonathan Murray, farmer at the Brazos agency; 118. James M. Taylor, blacksmith at the Brazos agency	2	11	550
New Mexico superintendency. Reports, &c., of the—			
No. 119. J. L. Collins, superintendent; 120. Christopher Carson, agent for the Mohuache Utahs; 121. Samuel M. Yost, agent for the Pueblos; 122. Diego Archuleta, agent for the Utahs, Capotes, and Apache Jicarillas; 123. M. Steck, agent for the Indians within the Apache agency; 124. Superintendent Collins, transmitting copies of letters from Agent Steck and Colonel R. C. Bonneville, United States army; 125. Agent Steck, relative to an interview held with a deputation of Coyetero Apaches; 126. Colonel Bonneville, describing the region watered by the Gila river 127. Lieutenant Sylvester Mowry, describing the Territory of Arizona, or the "Gadsden Purchase," and the tribes inhabiting the same	2	11	561
Utah superintendency. Reports, &c., of the—			
No. 128. Agent Garland Hurt, relative to Mormon missionaries; 129. Acting Commissioner of Indian Affairs to the Secretary of the Interior upon the subject of these mission-			

Subject.	Vol.	No.	Page.
Reports of the Commissioner of Indian Affairs—Continued.			
aries; 130. Acting Commissioner, for consideration by the Secretary; 131. George W. Armstrong, agent for the Indians in Utah; 132. Brigham Young, governor, to the Commissioner of Indian Affairs; 133. Commissioner of Indian Affairs to Governor Young	2	11	593
Oregon and Washington superintendency. Reports, &c., of the— No. 134. J. W. Nesmith, superintendent; 135. E. C. Fitzhugh, special agent for the Neuk-sack, Samish, and Lummis tribes; 136. G. A. Paige, local agent at the Fort Kitsah reservation; 137. M. T. Simmons, agent for the Indians of Puget's Sound district; 138. R. C. Fay, local agent at Penn's Cove; 139. Thomas S. Hanna, special agent for the Indians on Puget's Sound; 140. W. B. Gosnell, agent for the Nisqually, Puyallup, and other Indians; 141. Sidney S. Ford, sr., special agent for the Indians in the western district of Washington Territory; 142. J. Cain, agent for the Indians on the Columbia river, from its mouth to the Dalles; 143. A. Townsend, local agent at White Salmon reservation; 144. A. H. Robie, special agent for the Indians between the Columbia river and the Cascade mountains; 145. William Craig, sub-agent for the Cayuses and Nez Percés; 146. W. W. Raymond, sub-agent for the Indians within the Astoria district; 147. R. B. Metcalfe, agent for the Indians within the Siletsa agency; 148. E. P. Drew, sub-agent for the Indians within the Umpqua sub-agency; 149. John F. Miller, agent for the Willamette tribes; 150. John Ostrander, teacher of the Rogue River and Umpqua school; 151. Mary C. Ostrander, teacher of Willamette school; 152. Amasa Howe, superintendent of farming for Willamette tribes; 153. A. P. Dennison, agent for the Indians of the northeastern district of Oregon; 154. R. H. Lansdale, agent for the Flat Head district; 155. William Tichnor to Superintendent Nesmith; 156. Superintendent Nesmith to Wm. Tichnor; 157. Brigadier General Clarke to Superintendent Nesmith; 158. Superintendent Nesmith to Brigadier General Clarke; 159 Assistant Adjutant General Mackall to Superintendent Nesmith; 160. Assistant Adjutant General Mackall to Major Garnett	2	11	603
California superintendency. Reports, &c., of the— No. 161. Thomas J. Henley, superintendent; 162. H. P. Heintzelman, sub-agent for the Klamath reservation; 163. Vincent E. Geiger, agent for the Nome-Lackee reservation; 164. H. L Ford, sub-agent for the Mendocino reservation; 165. M. B. Lewis, sub-agent for the Fresno farm; 166. J. R. Vineyard, agent for the Indians of Tejon; 167. Reconnoissance through the country around Cape Mendocino, by James Tobin; 168. Commissioner of Indian Affairs to Superintendent Henley, relative to the concentration of the Indians upon the reservations in California	2	11	675
In relation to the claim of the St. Regis Indians to lands in Kansas	13	73	1
Report of the Second Comptroller, viz:			
A statement of the appropriations for the service of the Indian department for the year ending June 30, 1857	1	6	1

Subject.	Vol.	No.	Page.
Reports of the Auditor of the Post Office Department, viz:			
Statement relating to the revenue of the Post Office Department from foreign and domestic postages; postage accounts with foreign governments; revenue from the several lines of steamers; classification of suits instituted for the recovery of balances from delinquent postmasters, &c	4	11	1083
Reports of the Engineer Office, viz:			
An estimate for a fort at New Inlet, North Carolina	1	7	1
Estimates for the improvement of certain harbors on Lake Erie	1	15	1
Estimates for the improvement of rivers and harbors in New York	1	16	1
Report of the Commissioner of Public Buildings, viz:			
On the operations of his office during the past year, accompanying the President's annual message, (part 1)	2	11	718
Report of the Resident Physician of the Washington Infirmary, viz:			
On the operations of his office during the past year, accompanying the President's annual message, (part 1)	2	11	730
Reports of the Board of Visitors of the Government Hospital for the Insane, viz:			
Second annual report accompanying the President's annual message, (part 1,) and accompanied by the report of the superintendent, &c., for the continuation of the buildings for said hospital	2	11	733 740
Reports of the president of the Columbia Institution for the deaf, dumb, and blind, viz:			
On the condition of said institution on the 1st day of July last, accompanying the President's annual message on the state of the Union, (part 1)	2	11	744
Report of the Warden of the Penitentiary of the District of Columbia.			
Accompanying the President's annual message on the state of the Union, (part 1)	2	11	750
Report of the Engineer in charge of the Little Falls bridge.			
Accompanying the President's annual message on the state of the Union, (part 1)	2	11	774

35TH CONGRESS, 1st Session. } SENATE. { Ex. Doc. No. 30.

REPORT

OF THE

COMMISSIONER OF PATENTS

FOR THE YEAR 1857.

ARTS AND MANUFACTURES.

IN THREE VOLUMES.

VOLUME II.

WASHINGTON:
WILLIAM A. HARRIS, PRINTER.
1858.

IN THE SENATE OF THE UNITED STATES.

March 16, 1858.

Resolved, That there be printed, in addition to the usual number, ten thousand copies of the Annual Report of the Commissioner of Patents on Arts and Manufactures, for the year 1857, eight thousand of which for the use of the Senate, and two thousand for the Interior Department for the purposes of official distribution; and that the Secretary of the Interior be, and he is hereby, directed to cause the Annual Report of the Commissioner of Patents on Mechanics, hereafter to be made to the Senate, to be prepared and submitted in such manner as that the plates and drawings necessary to illustrate each subject shall be inserted, so as to comprise the entire report in one volume, not to exceed eight hundred pages.

Attest:

ASBURY DICKINS, *Secretary*.

By W. HICKEY, *Chief Clerk*.

ERRATA IN CLASSIFIED LIST OF PATENTS FOR 1857.

On page 181, instead of 18326 read 18325.

On page 188, instead of 17355 read 17350.

On page 188, instead of 18140 read 18148.

On page 189, instead of 18109 read 18104.

On page 190, instead of 18525 read 18524.

On page 194, insert between 18598 and 17839 the following: 18604.—*Tree-protector.* P. C. Rowe.—November 10, 1857.

On page 194, instead of 17732 read 16732.

On page 195, instead of 16864 read 16868.

On page 198, instead of 17792 read 16792.

On page 199, instead of 18582 read 18542.

On page 216, instead of 18439 read 18430.

On page 226, instead of 17017 read 17016.

On page 226, instead of 18085 read 17085.

On page 231, insert between 17959 and 18352 the following: 16696.—*Dry Docks, floating, sectional.*—John Seely.—February 24, 1857.

On page 247, instead of 18926 read 18927.

On page 247, instead of 17555 read 17565.

On page 257, instead of 17139 read 17130.

On page 263, instead of 16566 read 16556.

On page 263, instead of 16559 read 16659.

On page 266, instead of 18526 read 18546.

On page 271, instead of 17738 read 16738.

On page 277, instead of 17101 read 17107.

On page 279, instead of 17553 read 17573.

On page 281, instead of 17147 read 17179.

CONTENTS.

IV.—DESCRIPTIONS AND CLAIMS—Continued.

	Page.
VI.—Steam and gas engines	1
VII.—Navigation and maritime implements	39
VIII.—Mathematical, philosophical, and optical instruments	67
IX.—Civil engineering and architecture	84
X.—Land conveyance, comprising carriages, cars, &c	134
XI.—Hydraulics and pneumatics	171
XII.—Lever, screw, and other mechanical power	206
XIII.—Grinding-mills and mill-gearing	225
XIV.—Lumber, including machines and tools for preparing and manufacturing	251
XV.—Stone and clay manufactures	327
XVI.—Leather, including tanning, dressing, and manufacture	341
XVII.—Household furniture, machines and implements for domestic purposes	361
XVIII.—Arts, polite, fine, and ornamental	404
XIX.—Fire-arms and implements of war	462
XX.—Surgical and medical instruments	489
XXI.—Wearing apparel, including implements for manufacturing	500
XXII.—Miscellaneous	508
Appendix to descriptions and claims	527
Claims of inventions for which patents were reissued in the year 1857	533
Claims to additional improvements granted during the year 1857	555
Claims of extensions granted in the year 1857	560
Claims of designs for which patents were granted during the year 1857	564

ILLUSTRATIONS.

I.—Agriculture, including implements and operations	579

VI.—STEAM AND GAS ENGINES.

No. 17,636.—WILLIAM G. PIKE and ISAAC R. SCOTT, of Waltham, Mass.—*Improvement in Safety Apparatus for Regulating Steam Boiler Furnaces.*—Patent dated June 23, 1857.—The steam is carried from boiler A, through pipe C, to the radiators which heat the building, and the safety valve *b* is set to blow off at a definite pressure; and when this valve is raised, the steam passes through pipe M and nozzle F into the fire-box, and dampens the fire. Should the valve *b* fail to operate, the pressure of the steam will blow the mercury which is in the top of pipe O out of said pipe into the jacket P, and the steam escapes, through pipes N and O and nozzle F, into the fire-box, and extinguishes the fire.

The inventors say: We do not claim regulating the intensity of furnace fires by closing the dampers in the draught and smoke pipes by means of a float within a water chamber.

But we do *claim* the described arrangement of the bent mercury tube O, with its float and the parts immediately connected therewith, and the steam pipe *f*, whereby the pressure within the boiler is indicated to the eye. The dampers are regulated to suit the pressure required, and when the pressure within the boiler becomes excessive, the fire is extinguished by the escaping steam, thereby forming a safety regulating apparatus not requiring the supervision of the attendant.

No. 17,436.—JAMES EDWARD MCCONNELL, of Wolverton, England.—*Improvement in Locomotive Boilers.*—Patent dated June 2, 1857; antedated December 2, 1856.—The object of having the fire-box A extending into the barrel B, is to diminish the length of the tubes C. As the locomotive is in motion, a current of air enters the funnel P, passing into chamber O in the smoke-box, and thence through pipe N into the fire chamber, whereby the products of combustion are consumed in a perfect manner. The vertical tubes E serve to connect the bottom and top of the extended portion of the fire-box, thereby increasing the heating surface and allowing a free circulation of water.

The inventor says: I do not confine or restrict myself to the precise details or arrangements which I have had occasion to describe or refer to, as many variations may be made therefrom without deviating from the principles or main features of my invention.

What I consider to be novel and original, and therefore *claim*, is the fire-box increased in size, so as to extend into the barrel of the boiler, and, in connexion therewith, the tubular stays conveying a supply of fresh air into the extension described, whereby the products

of combustion are consumed in a more perfect manner, substantially as set forth.

I also claim the water tubes E, arranged in relation to the fire-box and the surrounding boiler in the manner and for the purpose specified.

No. 17,661.—SILVESTER BENNETT, of New Orleans, La.—*Improved Machine for Riveting Boilers.*—Patent dated June 30, 1857.—The rivet being inserted in the holes made to receive it, and placed with its head upon the die *a*, and its point upwards, steam is admitted above the piston of the lower cylinder A, by which means the set F is forced downward upon the metal surrounding the rivet; and while the set remains upon the metal, steam is admitted above the piston of the upper cylinder A^1, which brings down the punch F^1 upon the point of the rivet, and at once completes the operation.

The inventor says: I do not claim, of itself, the employment of a set or tubular punch to close the metal around the rivet before the riveting operation, when such set is uncombined with the riveting punch or other devices, by which the upsetting or heading up of the rivet is effected, and has to be removed before the said punch or other device can be operated, as such sets are used in riveting by hand.

I *claim* the employment, in combination with a riveting punch or plunger, of a hollow set, fitted to slide upon the exterior of the same, and operated to close or set the metal around the rivet before the operation of the punch or plunger commences, and hold the same closed during such operation, substantially as described.

No. 16,693.—JASON J. PALMER, of Flushing, N. Y.—*Improvement in Steam Boilers.*—Patent dated February 24, 1857.

The inventor says: I am aware that the circulation of the water in steam boilers has been and is effected by the use and arrangement of heating flues; and therefore I do not claim generally producing such a circulation by the use of such flues.

I *claim* the particular arrangement of the flues B *b*, B *b*, substantially as described, close to the fire shell of the boiler, and admitting only a thin but continuous sheet of water between them and the fire shell; this thin sheet of water also connecting freely at top and bottom with the main body of water in the boiler, by which arrangement a more rapid and complete circulation is produced; this thin sheet of water being constantly forced towards and in contact with the sides and crown of the fire shell—*i. e.*, the hottest part of the boiler—and thus heated more rapidly and made to circulate the faster.

I also claim the arrangement of the perforated plate E, it being interposed between the furnace and low exit into the smoke box or stack.

No. 16,959.—SMITH BALDWIN, of St. Louis, Mo.—*Improvement in Steam Boilers.*—Patent dated April 7, 1857.—The fire on the grate B acts by radiation on a large portion of the exterior of the tubes *d d;* and the gaseous products of combustion circulate among and around the said tubes and around the interior of the cylinder *b*, which, with the exterior of the tubes, is all heating surface, and from thence escape

through the connexions *k* and flues *j j*, which are all heating surfaces, into the arched flue *m*, and from thence through the flue *n* to the chimney *q*.

Claim.—The arrangement of the cylinders *a b*, the water tubes *d d*, flues *j j*, *m* and *n*, in the manner substantially as described, to operate as set forth.

No. 17,042.—NELSON JOHNSON, of Jasper, N. Y.—*Improvement in Steam Boilers.*—Patent dated April 14, 1857.—The nature of this invention will be understood by reference to the claim and engraving.

Claim.—In combination with the employment of a direct internal flue B, and a direct passage F under the bottom of the boiler A, both leading from the fireplace C to the chimney E, the arrangement of the two dampers G and H, substantially as herein described, for the purpose of controlling the direction of the products of combustion, and using the boiler as a direct draught cylinder boiler or direct flue boiler.

No. 17,648.—HARRY WHITAKER, of Buffalo, N. Y.—*Improvement in Steam Boilers.*—Patent dated June 23, 1857.—The products of combustion pass upwards from the annular grate N to the top of the chamber P, and then descend the tubes F to the smoke-box Q, from whence they rise through the tubes H to the chimney.

The inventor says: I do not claim generally surrounding the fire by a water jacket. An example may be seen in E. Andrus's withdrawn application, May 27, 1850.

Nor do I claim annular fire chambers in boilers.

Nor do I claim, irrespective of the arrangement I have described, the employment of ascending and descending fire flues. Examples of such flues may be seen in the withdrawn applications of Thomas Greer, October, 1847, and Thomas E. Warren, July 19, 1852; but the arrangement of flues and parts therewith connected, in the above examples, is quite different from mine.

I *claim* the arrangement in an upright cylindrical boiler of an annular fire chamber P, a series of descending fire tubes F F, a smoke-box Q, and a series of ascending fire tubes H H, substantially as described, to convey the products of combustion from an external fire through the centre of the boiler.

No, 17,924.—ROBERT FERGUSON, of New Orleans, La.—*Improvement in Steam Boilers.*—Patent dated August 4, 1857.—The construction of the flues P^1 and P^2 and the water-spaces A A^1 A^2 furnishes a large amount of heating surface, and the form of the water-spaces renders them capable of sustaining a very high degree of pressure without the use of stays.

Claim.—The eccentric arrangement of the water-spaces A A^1 A^2 connected with each other, and alternating with the flues of lune cross section, substantially as and for the purpose specified.

No. 18,276.—WILLIAM M. ELLIS and JONAS B. ELLIS, of Washington, D. C.—*Improvement in Boilers.*—Patent dated September 29,

1857.—This invention consists in strengthening the body of the boiler at its junction with the water-legs in such a manner that the usual internal stays may be dispensed with, thus leaving more space for the tubes or flues, while, at the same time, the passages remain open, as before, for the circulation of the water through the legs and body of the boiler.

The accompanying drawings represent a portable steam boiler, embracing the improvement. The furnace is surrounded by the water-legs K, which, in this instance, rise perpendicularly to the boiler, so as to unite with it just above the low water line. The legs are connected with the cylindrical part of the body in the following manner: A strong stay plate N, of the same length as the shell of the boiler, is placed between the flanges of the water-legs and the shell of the boiler, and strongly riveted to both; holes are made through the stay-plate N to permit the water to circulate freely through the legs.

The inventors *claim* connecting the upper and lower parts of the shell of the body of the boiler by means of a strong perforated plate N, which performs the double office of staying the boiler and forming a passage for the circulation of the water and steam through the legs and body of the boiler.

No. 18,467.—William George Norris, of Philadelphia, Pa.—*Improvement in Steam Boilers.*—Patent dated October 20, 1857.—In the engravings, F is the furnace, constructed in the usual way. A is the water-wall, connected on all sides with the water-space. B is the flue or perforations through which the heat passes from the fire-box. The chamber F^1 is formed between the tube-sheet of the boiler and the abovementioned perforated water-wall, and is for the purpose of effectually preventing the contact of the fuel with the tubes G, terminating at the tube-sheet C. G are the tubes of the boiler; D^1 the smoke chamber; the whole constructed in the ordinary manner.

The inventor says: I am aware that boilers have been constructed with a supplementary combustion chamber, forming part of the fire-box, having valves for the admission of the atmosphere, for the purpose of more effectually consuming the gases evolved from the combination of the furnace; but I disclaim any such arrangement; the chamber in my improvement, between the fire-box and tube-sheet, being *closed*, and for the express purpose of preventing any combustion from going on in actual contact with the tubes G of the boiler, and for the purpose of reverberating, and thereby equalizing, the heat before it reaches the tubes of the boiler.

I *claim* the combination with the ordinary steam boiler and fire-box of a close chamber, separated from the fire-box by a partition or perforated water-wall, constructed and operating as and for the purposes set forth.

No. 18,822.—David Matthew, of Philadelphia, Pa.—*Improvement in Steam Boilers.*—Patent dated December 8, 1857.—In this invention a boiler A^2 is constructed of the usual form of shell, and furnace B^2, with combustion chamber C, running through the whole length of waist, having a flue-tube sheet, so as to have the flue tubes running

diagonally from the bottom to top, as shown in engravings. D thus forming, by means of tubes *a*, upper and lower chambers for gases, while the water has a regular ascending current or circulation, the fire and gases are drawn with great rapidity, by the exhaust steam and draught pipe, into the smoke-box, through, amongst the flue tubes in its passage from the furnace to the smoke-box. The draught or current is made to be equally divided the whole length of the tubes and combustion chamber by the draught-sheets *e f*, in its passage to the smoke-box and draught-pipe or sectional chimney in the smoke-box.

Claim.—The arrangement of the draught-plates *e* and *f* in relation to the inclined tubes or flues D, as and for the purposes set forth.

No. 18,875.—F. R. WALKER, of Tulley, Mo.—*Improvement in Steam Boilers.*—Patent dated December 15, 1857.—A is an upper water chamber. B is a lower water chamber. These two chambers are connected together and a communication formed between them by the flues C. These flues are made in the ordinary manner, and are fastened into the flue sheets D and E; one of these flue sheets forms the bottom of the upper water chamber, and the other forms the top of the lower water chamber. F F are partitions through the flues for the purpose of turning the fire in proper directions, to produce an equal and perfect circulation of heat among the flues.

Claim.—The arrangement of the vertical deflecting plates F, in relation to the water tubes C, the water spaces B and A, and the furnace and up-take, as set forth.

No. 18,897.—BENJAMIN L. GRIFFITH, of Hazleton, Pa.—*Arrangement of Air Tubes in Fire-Boxes of Steam Boilers.*—Patent dated December 22, 1857.—This invention consists in an improved method of admitting atmospheric air into the gas or combustion chamber of steam boilers. This is done by means of air tubes B, as shown in the engravings. These tubes are placed within the water table, and are closed at the inner or lower ends, but are open at the outer or upper ends, where the size of the opening is regulated as required by sliding dampers or other proper means. These tubes communicate with the interior of the fire-box by means of small hollow stay bolts, by which they are held in position. The atmospheric air is thus distributed or mixed with the gases through numerous small jets.

Claim.—The placing of air tubes within the water tables or series of water tubes, as described.

No. 17,288.—SYLVANUS V. LOWE, of Reading, Pa.—*Improved Machine for Boring Flue Sheets of Steam Boilers.*—Patent dated May 12, 1857.—The square part of mandrel A is applied to any ordinary drill stock, and the point of mandrel A is screwed into the centre mark, where a hole is desired to be cut into the boiler. By turning hand wheel B the operator causes cutter head C and the cutters D, on said cutter head, to cut a concentric circle through the object to be bored, leaving the centre of the hole solid.

Claim.—The attachment and use of mandrel A, when constructed, arranged, and adapted to this purpose only, and made to operate in a manner as substantially described and set forth.

No. 16,664.—WILLIAM WEBSTER, of Morrisania, N. Y.—*Improvement in Damper Regulators for Steam Boilers.*—Patent dated February 17, 1857.—N is a pipe communicating with the boiler. The steam, acting through said pipe upon diaphragm A, operates the weighted lever F by means of standard D. The lever operates the damper in the chimney.

The inventor says: I disclaim the use of any cylindrical casing for the enclosing of the piston, and also the piston, as described in the specification and represented by the drawing of Wm. T. Gale, patented July 1, 1856.

But I *claim* the arrangement of the several parts, as described, and for the purpose set forth.

No. 17,533.—PATRICK WHITE, of Brooklyn, New York.—*Improvement in Damper Regulators for Steam Boilers.*—Patent dated June 9, 1857.—The use of this machine is to open and shut the damper in the flue or draught chimneys by the pressure of steam in the flexible pipe C, to which the steam pipe K is secured; said pressure can be regulated by means of weighted lever F acting upon the plate E and clamps D, which hold the flexible pipe C between them.

Claim.—Securing the ends of the flexible tube by the clamps D D and metallic plugs K M, substantially as described.

No. 16,662.—ANDREW J. VANDEGRIFT, of Delaware, Ohio.—*Improvement in Feed-Water Apparatus to Steam Boilers.*—Patent dated February 17, 1857.—When valve I is opened by eccentric J and lever S, and the heated water, by its own specific gravity, descends through pipe K into exchange chamber B when it is filled, and valves I and G close simultaneously, and valve L is opened by eccentric M and lever V, and the steam ascends through pipe N into the exchange chamber, and equalizes the pressure on both sides of valve O; when valve O is opened by eccentric P and lever U, and the water descends through pipe Q to the bottom of boiler C, the steam ascending through pipe N takes the place of the water in exchange chamber B, and valves O and L close simultaneously. Valves I and G operate alternately with O and L; and the exchange of steam for water continues until the water in boiler C rises to the mouth of pipe N, which extends down to high water mark; when the exchange ceases, and chamber B remains full of water, until the quantity of water in the boiler is diminished, and the surplus water passing through heater A passes off through waste-pipe R.

The inventor says: I am aware that the heater, the exchange chamber, and three valves and three pipes, have been used for like purposes; these I do not claim.

But I *claim* the fourth valve G and the escape pipe H, in combination with the above described devices, or their equivalents, combined, arranged, and operated for the purpose and in the manner set forth, or in any other substantially the same.

No. 16,604.—MIGHILL NUTTING, of Portland, Maine.—*Improvement in Gauges and Water Regulators for Steam Boilers.*—Patent dated February 10, 1857.

The inventor says: I do not confine myself to the use of water as the fluid to fill the expanding chamber, as alcohol, air, or other fluids may be used for this purpose.

I *claim* the arrangement of the expanding chamber B in relation to the opening for steam in the heating apartment A, so that the steam from the boiler, when it is admitted to this apartment, is suddenly brought into contact with the surface of the lower part of the chamber within the apartment, and remains in contact with the same until the water in the boiler rises to the top of the opening which admitted the steam, when the contact of the steam with the chamber is suddenly cut off, as described.

No. 17,046.—ROBERT MCCAFFERTY, of Lancaster, Pennsylvania.—*Improvement to Prevent Incrustations in Steam Boilers.*—Patent dated April 14, 1857.—Gum caoutchouc is put into a steam boiler in the proportion of half a pound to a one hundred horse power boiler, so that the water may be tinged light brown. Said gum will prevent or remove incrustation of the boiler.

Claim.—The application and use of gum caoutchouc to prevent and remove the incrustations in steam boilers and steam generators, in the mode and quantities described.

No. 16,596.—LUCIUS J. KNOWLES, of Warren, Massachusetts.—*Improvement in Safety-Indicators for Steam Boilers.*—Patent dated February 10, 1857.—By connecting pipe I with the feed pipe B, instead of with the boiler, it receives cool water from the pipe, instead of hot water from the boiler; the same tending to cause the expansion apparatus to operate to better advantage than it would were the hot boiler water to flow into it.

The inventor says: I do not claim arranging and connecting a tubular or elongated vessel C with a steam boiler, substantially as described, in combination with so supporting the said vessel C at one end or part of it, and applying to it a lever or other proper means, that it may expand and contract and operate said lever or means, essentially in manner and for the purpose specified.

I *claim* connecting the pipe I with the boiler by means of the feed pipe B, the same being productive of an advantage, as stated.

No. 17,472.—DATUS E. RUGG, of New York, N. Y., assignor to DEXTER N. FORCE and DATUS E. RUGG, aforesaid.—*Improvement in Water Gauges for Steam Boilers.*—Patent dated June 2, 1857.—The glass tube *g*, which surrounds the pipe *b*, is filled with water; when the water in the boiler *a* descends below the level of the tube *g*, the water in said tube is heated to a boiling heat, and can, by its ebullition, serve to indicate the water level in boiler *a*.

The inventor says: I do not claim a metallic pipe connecting with the steam and water spaces of the boiler in itself. Neither do I claim a transparent water gauge in itself.

But I *claim* the combination of the metallic pipe, connected to the steam and water-spaces, with the surrounding transparent tube or

cylinder to indicate, by the ebullition of the fluid in said cylinder, the water level of the boiler, substantially as and for the purposes specified.

No. 18,420.—EDWARD WHITELEY, of Boston, Massachusetts.—*Improvement in Water Gauges for Steam Boilers.*—Patent dated October 13, 1857.—By this improvement the frequent breaking of the glass tube used in water gauges, caused by the unequal expansion of the tube and the metal, is remedied by placing a packing of India rubber, or other elastic substance, around the tube, where it is confined in the sockets C.

The inner end of each socket is formed with a screw *c*, on which screws the nut or cap E. Embracing the tube D, where it enters the sockets at each end, is a tube of India rubber, or other suitable elastic substance *f*, which forms a packing between the tube and the socket. One or more elastic washers *g* and a metal washer *i* are placed between the cap E, and the end of the socket and the cap is screwed down, as shown in the drawings, when the washers expand by the pressure of the cap, and firmly embrace the elastic tube *f*. This secures the tube D, allows a slight motion longitudinally to compensate for unequal expansion, thereby preventing the breakage of the glass tube.

The inventor says: I *claim* the arrangement of the elastic tube or packing around the glass tube, and the elastic disks or washers around the first, in the manner and for the purpose substantially as set forth.

I also claim the within described method of constructing and attaching the cage or guard which surrounds and protects the tube D.

No. 18,425.—F. B. FOURNIER and DAVID HINMAN, of Berea, Ohio, assignors to Themselves and J. MUNROE, of the same place.—*Improvement in Water Indicators for Steam Boilers.*—Patent dated October 13, 1857.—In this improvement, in case of high water, the float A will rise to A^1, which raises the arm N^2 and rod N, so that the valve is opened or raised from L^1 to L, which allows the steam to pass through the pipe to the whistle, and thereby indicate too much water.

In case of low water, the float drops to A^2, the lever B then acts on the end of the rod N, and raises the valve in the manner as in high water, which gives a warning signal of low water.

The inventors say: We claim the rod N and arms N^1 and N^2, in combination with the pipe J and valve L, when the same is arranged in relation to and operated by the lever B, so as to signal high or low water by the whistle K, substantially as set forth.

No. 18,861.—THOMAS PROSSER, of New York, N. Y.—*Improvement in Surface Condensers.*—Patent dated December 15, 1857.—The claim and engravings explain the nature of this invention.

Claim.—The application of condensers, consisting of two hollow slabs, connected together by concentric tubes, and communicating with each other by means of the annular spaces formed by them, when, and at the same time, such condensers are combined with and placed in cisterns, so as to form one complete condensing apparatus, and operated in the manner and for the purposes set forth and described.

No. 18,532.—HENRY W. BILL, of Cuyahoga Falls, Ohio.—*Arrangement of Feed-Water Pipe in the Bed of a Steam Engine.*—Patent dated November 3, 1857.—The engraving and claim explain the nature of this invention.

The inventor says: I am aware that steam and water passages have been made through the frame and bed of a steam engine; this I do not claim.

But I *claim* making the bed of a steam engine hollow, and so as to form a steam chamber, and arranging the feed water pipes in or through said chamber, so that the exhaust steam in the chamber shall heat the feed water in the pipes, as set forth.

No. 18,933.—GAMBRILL SPRENKEL and THOMAS W. BASFORD, of Harrisonburg, Va.—*Arrangement of Oscillating Engine and Pumps.*—Patent dated December 22, 1857.—The nature of this invention consists in locating the pump in the side of the main cylinder, so that it forms a portion of the same casting; the plunger of the same being attached to an extension of the crank pin, and the water being received and discharged through openings in the sides of a single trunnion. This invention also consists in the peculiar arrangement, whereby the trunnion receives and discharges the steam, allowing it to flow from the boiler through the trunnion to one end of the cylinder, while it escapes through the same trunnion from the other end, thus leaving the other trunnion at liberty to be used for the induction and eduction of water for the pump.

The inventors say: We *claim* the arrangement of the pump, in such relation to the main cylinder and crank of an engine, that its pistons and valves shall be operated simultaneously with the piston and valves of the cylinder, and by the same means that actuates them.

Second. The peculiar arrangement consisting of boxes, with inlet and outlet passages C^5 C^6, hollow trunnion with two chambers d d^1, formed by diagonal partition e, and with two sets of ports c^1 c^2 c^3 c^4, substantially as and for the purposes set forth.

No. 17,213.—HORACE GRAY, of Boston, Mass.—*Improvement in Locomotive Engines.*—Patent dated May 5, 1857.—The object of this invention is to increase the grate and fire surface to any extent necessary to an economical application of fuel, and to generate the steam of a quantity and tension desired by the extent of the grate and fire surface, with a moderate fire, instead of by a small extent of grate and fire surface, and great intensity of fire.

Claim.—Constructing locomotive steam engines with two or more boilers, or with one boiler having two or more separate fire-boxes or furnaces connected, and operating on the principle and for the purpose substantially as specified.

No. 18,255.—D. C. TURNER, of Aztalan, Wis.—*Improvement in Rotary Steam Engines.*—Patent dated September 22, 1857.—A principal feature in this invention is the floating abutment, which, although answering all the requirements of a fixed one, will adjust itself to the changes caused by the wearing of the fans or other parts.

In this improvement the steam commences to operate on each piston just as it comes to the position shown in fig. 2—*i. e.*, as soon as it passes the valve K; until the piston reaches this position, the valve has been closed for a time by the projecting part *f* of the passage F, or by the piston itself. The piston continues to be acted upon by the pressure of steam until it arrives nearly at the eduction pipe L, by which time the projection *f* behind it will have arrived in contact with the valve and closed it, thus cutting off the supply of steam. The piston is returned to its recess in passing over the face of the piece H.

The inventor says: I do not claim making the engine with two sets of pistons working in separate steam channels.

But I *claim* the valve K, in its recessed seat, and the protuberant rim *f f*, as arranged with the steam channels, floating abutments, and hinged pistons, as fully specified.

No. 18,063.—Gerard Sickles, of Brooklyn, N. Y.—*Improvement in the Packing of Rotary Steam Engines.*—Patent dated August 25, 1857.—The nature of this invention will be understood by reference to the claim and engraving.

Claim.—The application of loose metal rings *g g*, in the manner substantially as described, to pack the revolving heads which carry the pistons to the stationary head of the cylinders of rotary engines and pumps.

No. 16,940.—Sylvanus James Wethrell and Eustis P. Morgan, of Biddeford, Me.—*Improvement in Shaping Engines.*—Patent dated March 31, 1857.—When the cutting tool *o* is in operation on a piece of work fixed on the mandrel P, the feed may be effected either by the operation of the double pawl *u*, or by the workman applying his hand to the hand-wheel *p*. When a piece of work placed on the platform B is to be planed, the pin *k* is inserted through the two gears *g* and *h*, which causes the feed of the tool over such work to take place either by the operation of the double pawl *u* or by moving the hand-wheel *p*.

The inventors say: We do not claim, for the purpose of feeding the main carriage along on its ways, a long revolving male screw, turned by a pawl and toothed wheel movement, (arranged at one end of the machine,) and made to revolve in a female screw fixed and made stationary on the main carriage.

Nor do we claim, for the purpose of turning the revolving mandrel, a rotary splined shaft, and an endless worm or screw made to work in a worm gear fixed on the mandrel—all the same making parts of the well known Whitworth's patent universal shaping machine.

But we *claim* to make the screw S a stationary male screw, and the female screw *c* (attached to the carriage D, and made to work on the screw S) a rotary screw, and to combine with them and the gear *g*, (by which and the gear X the shaft T is rotated) the gears Y and *h*, (the latter being made to rotate on the shaft *i*, and to be fixed to the former, as occasion may require, by a pin K, or its equivalent,) a rocker arm *r*, and double pawl *u*, (or mechanical equivalents therefor,) applied to the shaft *i*, and operated essentially as described; the whole being to enable a workman to control the operations of the machine

as stated, without being obliged to go to the end of the frame, or leave his work in order to adjust or change the feed motion of the cutting tool, whether it be planing either plane or cylindrical work.

No. 16,781.—JOHN F. ALLEN, of New York, N. Y.—*Improvement in Cut-Offs of Steam Engines.*—Patent dated March 10, 1857.—This arrangement serves to cut off the steam instantaneously without any previous unnecessary contraction of the opening of the port, at any point between the commencement of the stroke and the half stroke of the piston.

The inventor says: I *claim*, first, the arrangement of the sliding cut-off valves A A^1, to work on a separate seat arranged inside of the seat of the main valve, and having a precisely similar arrangement of ports to the seat of the main slide valve, substantially as described.

Second. Though I do not claim the closing of the cut-off valves by steam pressure, I claim the foot pieces k k^1, and levers l l^1, attached to opposite ends of the main slide valve, and operating in connexion with pistons E E^1 that are attached to the cut-off valves, and working in cylinders connected with the main steam passages, and with spring catches j j^1, that retain the said pistons and adjustable sliding pieces n n^1, or their equivalents, substantially in the manner specified.

No. 18,919.—LEWIS MARTIN, of New York, N. Y.—*Improvement in Feed-Water Attachments for Steam Engines.*—Patent dated December 22, 1857.—The object of this invention is to force feed water, oil, spent steam, or other fluid into the boiler or steam chest F, against the pressure of the steam, by means of a cylinder or cylinders D, arranged so that they are free to oscillate in an annular rim of a disk or wheel A, which is enclosed in a tight chamber C, and revolves through an auxiliary feed channel; said cylinders having each a plunger d, which is connected to a fixed point e, and coincident with the centre of the wheel A, so that each plunger is successively drawn inward and made to leave an open chamber in the outer extremity of the corresponding cylinder during the half of each revolution that it is presented to the feed channel, and is forced outward and made to discharge the contents against the full pressure of the boiler during the other half of the revolution.

Claim.—The within described arrangement of the oscillating cylinders D, and plungers d, within a wheel A, whereby the plungers, when moving outward, are subjected to the full boiler pressure in every direction, or held in perfect equilibrium, in the manner above described and for the purpose set forth.

No. 18,997.—H. N. THROOP, of Pultneyville, N. Y.—*Improvement in Governor for Steam Engines.*—Patent dated December 29, 1857.—This invention consists of a wheel with a series of connected segments D, so applied as to be capable of moving from and towards its centre, or to form an expanding and contracting rim, and combined with a spring K, or springs acting in opposition to the centrifugal force generated in said segments or expanding rim by the revolution of the wheel, so that the segment or rim will have a tendency to move from

or towards the axis, as the velocity of the wheel increases or diminishes with the increasing or diminishing velocity of the motor, and thus will act upon the regulator to diminish or increase the supply of steam.

Claim.—The combination A, or their equivalents, the expanding segments and links forming the expanding rim, and the springs, to operate as described.

No. 17,200.—George W. Cotton, of St. Louis, Mo.—*Improvement in Metal-Packed Pistons for Steam Engines.*—Patent dated May 5, 1857.—The thrust on this packing can be tightened in a true or radial direction by the introduction of a wedge behind any one or more of the sliding inner steps or blocks *a*.

Claim.—The arrangement for operation together on a single ring packing of the wedge *b*, with its sliding block M and radial stretchers *r*, spiral springs *n o* and inner sliding steps or blocks *x*, substantially as shown and described.

Further, forming the joint or break of the single ring packing with overlapping tongues *g* K and wedges *l*, of less depth than the packing, and fitting loosely between the bevelled ends of the packing and the tongues *g* K at the top and bottom on opposite edges of the packing ring, as set forth.

No. 18,136.—George H. Corliss, of Providence, R. I.—*Improvement in Metallic Packing for Pistons of Steam Engines.*—Patent dated September 8, 1857.—The cylindrical springs D exert a perfectly uniform outward pressure on all parts of the packing A of the piston.

The inventor says: I am aware that springs of circular form have been employed to force out the packing rings; but such springs have in their normal condition been either straight or nearly so, and their elasticity produces merely a tendency to straighten themselves, and acts with greater force at two opposite points than at any other points of the packing ring, and these springs cannot be considered as elastic in the direction of their circumference. To the invention of such springs, however, I lay no claim.

Nor do I claim the employment of air vessels placed within the piston, in order to assist the packing thereof, as in R. A. Stratton's device, rejected in 1851.

But I *claim* the arrangement within a piston of the cylindrical springs D, in the manner and for the purposes substantially as described.

No. 18,235.—Patrick Clark, of Rahway, N. J.—*Improvement in Metallic Packing Rings for Steam Engines.*—Patent dated September 22, 1857.—To make these rings, there is first prepared sheet metal in long strips of the requisite width, and sufficiently thin to be readily bent into the desired circle, or folded up, as shown in the drawing, by the fingers of the operator.

No. 36 "roll brass," of that kind denominated by the trade "low brass"—*i. e.* about 85 per cent. copper and 15 per cent. zinc—answers very well. Other alloys capable of being rolled to the requisite thin-

ness may be used, and even pure copper or tin may answer under certain circumstances. These strips are tinned on both sides by drawing them through a belt of melted tin, which serves the important purpose of making the layers adhere to each other when the ring is in use, and thereby preventing the thin layers of metal from dragging out when worn through in any part by friction.

In the drawings, D is the rod; A A the packing ring; B B a little hemp or cotton wick above and below the ring, to prevent the India rubber from touching the rod; and C C the India rubber which serves to fill the balance of the stuffing box and compress the ring to the rod.

The inventor says: I *claim* constructing packing rings of a number or series of layers or lamina of sheet metal in the manner described, for the purpose of securing that flexibility necessary to enable me to bend around a rod a metallic ring having a sufficient quantity of material in it to insure the requisite durability.

No. 17,903.—JOHN WALLACE, of Pittsburg, Pa.—*Improvement in Oscillating Steam Engines.*—Patent dated July 28, 1857.—The stationary side pipes E are kept in steam-tight contact with the oscillating steam ports *g* by the application of elastic wedges A, which, at the expansion of the metal, can yield sufficiently to prevent a too great degree of friction between the working parts.

The inventor says: I wish it to be distinctly understood that I disclaim all such means that have been used before for adjusting and keeping up the "side pipe" against the seat surfaces on the cylinder, such as set screws, gib, and key, or any other devices which allow no yield to the side pipe.

But I *claim* the use of the elastic wedges A A, in contradistinction to the abovementioned unyielding devices, and as an improvement thereon, when constructed and arranged and operating on the side pipes substantially as described, and for the purpose set forth.

No. 17,422.—PATRICK CLARK, of Rahway, N. J.—*Improvement in Packing Pistons and Stuffing Boxes of Steam Engines.*—Patent dated June 2, 1857.—The nature of this invention consists in surrounding the rod A to be packed with several thicknesses of metal foil D in such a maner that the whole mass comes under the pressure of the surrounding hemp C, and constitutes a plastic mass of metal capable of being continually compressed to the rod A until it is all worn out.

Claim.—The foil or plastic sheet metal packing, as set forth.

No. 17,788.—GEORGE W. HOAGLAND, of Port Jervis, N. Y.—*Improvement in setting out the Packing of Pistons for Steam Engines.*—Patent dated July 14, 1857.—By screwing down the cone *c*, the arms B are expanded, and the packing A of the piston is set out.

Claim.—The setting out the packing by means of a tapering mandrel C placed in the centre of the piston rod, constructed and arranged substantially as described.

No. 16,613.—JOHN B. ROOT, of Buffalo, N. Y.—*Improvement in Rotary Steam Engines.*—Patent dated February 10, 1857.—The general

features of this improvement will be understood from the claims and engravings.

Claim.—First, the central hub A, when used as a support for friction rollers, in the manner and for the purpose set forth.

Second. The arrangement of friction rollers within the piston H upon the central hub A, substantially in the manner described.

Third. The piston H, when used and acting upon friction rollers, substantially in the manner described.

Fourth. The combination of the sliding-frame J, the self-adjustable boxes *i i*, the driving ring K, and the wedge L, for the purpose of regulating the bearing of the friction rollers upon the piston H and central hub A, substantially as set forth.

No. 18,989.—JOHN B. ROOT, of Youngstown, N. Y.—*Improvement in Rotary Steam Engines.*—Patent dated December 29, 1857.—The steam is admitted into the valve chamber *c*, through the steam-pipe S, and, when the valve V is opened, passes from the pipe into the cylinder through the port *p*, and presses upon the piston P, forcing it around in the direction of the arrows until it passes the opening *b* under the abutment, and from there exhausts through the opening *b* into the abutment chamber D, and from thence passes off through the exhaust pipe E. While the piston is passing the abutment, there is no force exerted, which makes a dead point; this is overcome by the balance wheel B, which carries the piston past the port *p*, when it receives the pressure of the steam again, as before, and the motion of the engine is continued.

Claim.—The arrangement of means for operating the oscillating abutment and the valve, as set forth.

No. 17,271.—C. B. GALLAGHER, of Allegheny City, Pa.—*Improvement in Semi-Rotative Steam Engines.*—Patent dated May 12, 1857.—A reciprocating rotary motion is imparted to piston J and sleeve I by the steam entering through ports R and escaping through chamber Q. This motion of sleeve I is converted into a continuous rotary motion by the arrangement of the wheels F and F^1, disks L ,pawls M, and wheels G. Wheel F is keyed on to shaft E, while wheel F^1 runs loose on the same, the disks L being keyed on to sleeve I.

Claim.—The arrangement of means set forth for producing continuous rotary motion from the semi-rotative piston of the engine.

No. 16,779.—JOHN T. ACKLEY, of Philadelphia, Pa.—*Improvement in Stop-Motions for Steam Engines.*—Patent dated March 10, 1857.—In case of an accident to the machinery, it is probable that the piston will ascend or descend beyond its usual originally regulated limits, and then the lug *b*, attached to the cross-head D, will strike either the upper or lower nut *e* or e^1. Should e^1 be struck, the fork *i* becomes the fulcrum of lever H, (see fig. 4;) should the lug strike nut *e*, the fork *h* becomes the fulcrum, (see fig. 3.) In both instances the projection *m* on lever L will be released, and spring M will be free to act on the lever L, so as to raise the rod N.

Claim.—The rod G, with its nuts *e* and e^1, in combination with the

spring lever H, having two fulcrums *h* and *i*, and the spring catch lever L, the said rod G being operated, in case of accident, by the cross-head of the steam engine or other convenient working part of the same, and the said catch lever L being connected to the eccentric rod or to a stop valve in the steam pipe, and the whole being arranged and constructed substantially in the manner and for the purpose set forth.

No. 17,879.—Frederic W. Howe, of Newark, N. J.—*Improvement in Governor for Engines, &c.*—Patent dated July 28, 1857.—When the speed of the engine is too great, the balls U will be thrown outward; this will gradually compress the spiral spring c^1, and by degrees increase the friction of the cone B with the conical cavity of the column; and as the cone B is feathered and turns with shaft F, the increasing friction will retard the motion of shaft F, starting the hub S by the differential wheels I, which, by the cogged sector S^1, moves the sliding rack M, lifting weight P, which operates the valve to admit less steam.

The inventor says: I am aware that the arrangement of wheels described has been employed to regulate the admission of steam to an engine or water to a wheel, for the purpose of regulating the velocity by the motion of the intermediate wheel, induced by the difference between the motion of the motor and that of the governor.

And I am also aware that the centrifugal force of the pendulum ball of a governor has been employed to make friction to retard the motion of the governor, and the differential motion to regulate the supply of steam or water.

I am also aware that it has been proposed to regulate the supply of steam to steam engines by an arrangement which enables the fly ball governor, by an intermediate mechanism, to increase or decrease the throw of the eccentric which operates the valves; the governor slide being connected with a friction brake, so as to increase or decrease the friction thereof, to make it greater or less than another friction, thus determining the throw of the eccentric by the relations of the two frictions determined by the position of the fly balls as they are elevated or depressed by the velocity of the engine; but it will be seen that the arrangement and combination of these are materially different from what I have described as constituting my invention. I do not, however, wish to be understood as making claim broadly to the modes of operation above pointed out.

But I claim the arrangement of the vertical shaft-receiving motion from the motor by the differential motion, substantially as described, to regulate the supply of steam to an engine or water to a wheel; the said shaft having arms, to which are suspended the arms of the fly balls, provided with cam-like projections, in combination with the sliding cap on the shaft, the friction cone feathered to the shaft, and fitted to a conical cavity of the column or standard, and the spring interposed between the friction cone and the cup, substantially as and for the purpose specified.

No. 17,817.—A. F. WARD, of Louisville, Ky.—*Improvement in Governors of Steam Engines, &c.*—Patent dated July 14, 1857.—When this governor has been adjusted to run the engine at a given speed, the clutch *p* will continue to rotate clear of the pins *n o*, so long as the variation of the speed is only very slight, and the regulation of the engine will be effected by the action of the balls C, without varying the length of connexion. If, however, the speed increases considerably, the balls will fall far enough to carry down the clutch *p*, till the pin O strikes it and carries rod *f* in the opposite direction to the governor, causing the screw f^1 to work in the screw socket *h*, and to force said socket downward, thus elongating the connexion with the valve, until the engine receives steam enough to bring it up to the desired velocity.

Claim.—The arrangement of the friction socket D, the female-screw socket H with its arms $q\ q^1$ and the clutch *t* on the governor rod *f*, the whole combining to operate as described, so that the female-screw socket *h* may be prevented from turning till the full supply of steam is given, or till the steam is cut off entirely, and afterwards be caused to turn with the governor rods.

No. 17,623.—FRANCIS GUSTINE, of Medford, Mass.—*Improvement in Vane Governor for Steam Engines, &c.*—Patent dated June 23, 1857.—As the speed of the engine increases, the bars C with the vanes E are revolved rapidly, and the resistance of the atmosphere against said vanes causes them to be thrown back, as represented in figure 2, turning the arms D and raising the toes *e*, which lift the sleeve F; by the vertical motion of this sleeve, the closing of the steam valve is regulated.

Claim.—The disks or vanes E, operating directly upon the valve rod toes, as described, whereby the valve is actuated by the varying deflections of the vanes, as set forth.

No. 18,563.—CHARLES WHITTIER, of Roxbury, Mass.—*Improvement in Vane Governor for Steam Engines, &c.*—Patent dated November 3, 1857.—The claim and engravings show the nature of this invention.

Claim.—Suspending the fans or vanes D on the crank (or its equivalent) attached to the spindle of the regulator valve, whereby the resistance of the atmosphere causes them to operate the valve in the manner as set forth.

No. 17,560.—JOSEPH L. EASTMAN, of Boston, Mass.—*Improvement in Steam Pressure Gauges.*—Patent dated June 16, 1857.—The pressure of steam acting upon the sheet of India rubber I causes it to bulge and bear upon disk M, which, being connected with bent lever O, recedes a short distance, its motion being checked by the spring R at the same time. Rack V operates pinion W, and turns the index X.

The inventor says: I do not claim the elastic diaphragm, nor the disk bearing thereon, nor the multiplying lever bearing upon the disk, nor the compensating spring acting upon the lever, nor the mechanism which actuates the index.

But I *claim* the arrangement of diaphragm I, disk M bearing against

the diaphragm, multiplying lever C, compensating spring R, and index, substantially as set forth.

No. 17,988.—D. G. WELLS, of New York, N. Y.—*Improvement in Steam Gauges.*—Patent dated August 11, 1857.—The pressure to be measured is applied within the flattened elastic tube A, which is folded so as to present a series of layers of tubes, each layer operating against the succeeding layer in such a manner that the closed end of the tube will have a motion proportionate to the number of layers used. The motion thus attained is transmitted through toothed sector F, and a pinion shaft to an index which moves over a dial.

Claim.—The use of a flattened tube when constructed and arranged in layers, substantially as described and for the purposes set forth.

No. 16,428.—E. G. ALLEN, assignor to HENRY O. ALLEN, of Boston, Mass.—*Improvement in Steam Pressure Gauges.*—Patent dated January 20, 1857.—The steam is admitted to the interior of the India rubber capsule C by means of cock G, and entering the capsule exerts its pressure on all parts thereof; but as the capsule C is confined laterally by spiral spring D, it can only be extended in an upward direction, in which direction the spring D yields. This movement operates rack *g*, and pinion *b*, which latter may be connected with a dial to indicate the degree of pressure.

The inventor says: I am aware that the use of elastic bags or capsules in steam gauges is old. It is seen in the rejected applications for patents of J. Lowe, October 17, 1851, and R. Lapham, August 2, 1855. I therefore distinctly disclaim the use of an impervious bag or capsule composed of rubber or other pliable material.

But the employment of a metallic helical spring dome D, in connexion with a capsule in steam gauges, forms an important and highly valuable improvement; and therefore disclaiming the use of springs in steam gauges, unless constituting a dome D, and disclaiming every part of my device described which is seen in any other steam gauge or analogous instrument,

I *claim* the helical dome D, constructed, arranged, and operating in the manner and for the purposes substantially as described.

No. 17,607.—JOSEPH H. MILLER and JOHN KAILEY, of Canton, O., assignors to Themselves and JOHN DANNER, of the same place.—*Improvement in Steam Pressure Gauges.*—Patent dated June 16, 1857.—The pressure of the steam in the steam boiler causes the steam to pass through pipe K into chamber I, pressing against the India rubber diaphragm E on which the mercury rests, and forcing the mercury upwards in the mercury tube D.

Claim.—The bell-shaped end of the mercury tube *d*, and the manner of fastening the gum elastic floor to the bottom of said bell-shaped tube *d* by being clamped between the glass *d d* and the metal P P, thus securely protecting the mercury from air, steam, and water; this we claim, when arranged and combined substantially as set forth for the purpose specified.

No. 18,272.—HENRY BATES, of New London, Conn.—*Improvement in Steam Pressure Gauges.*—Patent dated September 29, 1857.—This improvement consists in the arrangement of the sector with teeth on its side face, and a radial bearing projection near its axis, on an axis which is at right angles to the shaft of the pinion that actuates the pointer, and in proper relation for united action to said pinion, and to a controlling stud I, which terminates in an eccentric curve. By this arrangement the necessity of employing a spring to return the sector and pointer to their original or starting positions, when pressure is withdrawn, is avoided, as the sector returns by its own gravity. Another advantage is also secured; namely, a compensation is provided for the decreasing specific action of the section on the pointer, under increased pressure, as the bearing projection changes its point of bearing, and thereby lengthens the leverage and increases the movement of the dial simultaneously and correspondingly with the increase of the pressure of steam, and the decrease in the movement of the disk not yielding equally in proportion to the different degrees of pressure, but requiring, as the pressure increases, a greater amount of additional pressure, owing to its capability of being extended, to produce the movement of the pointer to a position which will tell the true pressure of the steam.

Claim.—I do not claim an elastic disk for actuating the gearing which gives motion to the pointer.

Neither do I claim a sector for actuating the pointer, except it be arranged to return to its original position by its own gravity without the aid of a spring.

But I *claim* the arrangement of the sector with teeth on its side face, and radial bearing projection near its axis on an axis which is at right angles to the shaft of the pointer pinion, and in proper relation for united action to said pinion, and to a controlling stud which terminates in an eccentric curve, substantially as and for the purposes specified.

No. 18,526.—E. G. ALLEN, of Boston, Mass., assignor to HENRY O. ALLEN, of Malden, Mass.—*Improvement in Steam Pressure Gauges.*—Patent dated October 27, 1857.—The volute spring *b b* is of peculiar shape, as it has an increasing width and thickness, as shown in the engraving, from its centre to its circumference. By giving this spring this peculiar shape it will at all times receive very nearly the same degree of play or movement from a stated number of pounds pressure, at whatever degree of compression of the spring the addition of the said number of pounds pressure be applied.

The inventor says: I *claim* the volute spring, as set forth, which increases both in width and thickness from its centre to its circumference, in combination with a disk of rubber or other elastic material, substantially in the manner and for the purpose specified.

No. 18,655.—JOHN E. WOOTTON, of Philadelphia, Pa.—*Improvement in Steam Pressure Gauges.*—Patent dated November 17, 1857.—A represents a steam-tight pressure chamber, formed by securing at their edges two elastic metallic disks B C, one upon either side of a

metallic ring D; to the ring D is attached a shank or stem E, through which is an opening F, by means of which communication is made between the pressure chamber and the steam boiler or other vessel containing pressure. P P P P are four legs, their purpose being to secure the exterior case to the instrument. G H are bars extending across the face of the disks B C; the bar G is firmly attached at its centre to the centre of disk B, the bar H extends across the face of the disk C, but at some little distance therefrom.

The inventor says: I do not claim separately the elastic metallic disk, as that, in one form or another, has for some time been in use.

But I *claim* the combined arrangement of the duplicate elastic metallic disks B C, with the bars G H, as described; for the purpose of giving motion to the index O, in the manner and for the purpose described.

No. 18,129.—E. H. Ashcroft, of Boston, Mass.—*Improvement in Tubes for Steam Pressure Gauges.*—Patent dated September 8, 1857.—Steam being admitted through passage *a*, it passes into the closed tube A, and the pressure of the steam within said tube increases the tendency of said tube to straighten, and will move the outer end at *b*, and will indicate the amount of pressure on a suitable dial. To obtain the required strength without a sacrifice of the proper elasticity, the tube is constructed of two thin tubes, one within the other, as represented in the engraving.

I *claim* as an improvement in pressure and vacuum gauges the described tube, formed by incasing one tube within another, as set forth for the purpose specified.

No. 16,458.—John Allcroft and Thomas Mighten, of New York, N. Y.—*Improvement in Steam and Pressure Gauges.*—Patent dated January 27, 1857.—The pressure of the steam entering the gauge through pipe *a* acts upon disk *c* and through it upon disk *d*, which assists in supporting and sustaining disk *c*, and transmits the pressure to lever *h*, which acts upon an index in the usual manner.

The inventors say: We do not claim the combination of two or more springs for any purpose when the springs are laid close together in the form of what are known as leaves.

But we *claim* the arrangement in pressure gauges of two or more corrugated elastic metal disks *c d*, at a distance apart, with an interposed ring or rings *g* between their edges, and one or more central bearings *i* between their centres, substantially as and for the purpose set forth.

No. 17,847.—Nathan Scholfield, of Norwich, Conn.—*Improvement in Governor for Water, Steam, and other Power.*—Patent dated July 21, 1857.—When the balls of the governor stand in a given position, so that the stud V shall revolve between the studs *t* without contact, and so that the clutch *g* shall revolve between the dogs *m n*, also without contact therewith, if the speed is reduced so that the balls of the governor descend, the stud V locks in with stud *t* of revolving thimble *h*, and the clutch *g* will also lock in with dog *m*, carrying with it

wheel M, through which the supply of motive power is increased, and the thimble S soon returns to its normal position, by screwing upward on shaft C, where it remains, while the position of the governor is unchanged, and the stud V revolves between the studs I, but the clutch *g*, by the action of the differential screw *e*, will have returned through only part of the distance, moved by the normal action of the governor.

Claim.—The application of a compensating adjustment for so changing the normal or medium rate of action of a governor or regulator while in action to rectify a disturbed motion, that it shall cease to act on the supply of the motive power, while the speed of the wheel or machinery is returning from any extreme of variation, and before reaching its proper rate, or that in which its action commenced; and also that it may commence a reverse action thereon to counteract or anticipate any excess thereof, if the return of the speed is so rapid as to induce a tendency to pass its proper medium.

No. 18,578.—J. L. EASTMAN, of Boston, Mass.—*Improvement in attaching Steam Gauges to Locomotive Boilers.*—Patent dated November 10, 1857.—In the engravings A is the gauge. B is an upright metal tube attached to the guage, and serving to convey the steam into it; said tube having a tight collar or shoulder *a* near the top to rest upon the spring C, which is secured within a cylindrical box D, the tube passing entirely through the box, and having another shoulder *c* near the bottom, against which a ring or detachable collar *b* is secured by a nut *e*, screwing on to the bottom of the tube to attach the tube to the spring C.

The spring represented is made of India rubber, but may be of metal. It rests upon the bottom of the box, and is confined therein by a ring *d*.

Claim.—Interposing between the gauge and the boiler the elastic cushion or spring, so that the jar or vibrations of the engine shall not be transmitted to the gauge, as set forth and described.

No. 18,348.—JAMES MITCHELL, Osceola, Iowa.—*Improvement in Locomotive Cow-Catchers.*—Patent dated October 6, 1857.—The nature of this invention consists in a secondary catching apparatus behind the ordinary angular track clearer, which is brought into action when an obstruction lifts the clearer.

The object is to lift obstacles from the track that may be passed by the cow-catcher, thus preventing the engine being thrown from the track. The drawings will give an idea of the invention.

The inventor says: I *claim* the combination cow-catcher, composed of clearer A and grating C, so constructed that the latter will be brought into action by the lifting of the clearer, and all parts be made to resume their original position by the forward movement of the engine, substantially as set forth.

No. 18,966.—GEORGE S. GRIGGS, of Roxbury, Mass.—*Improvement in Locomotive Engine Wheels.*—Patent dated December 29, 1857.—The wheel is cast with the dovetail *c* upon its periphery; these dove-

tails are wider upon one side of the wheel than upon the other, and thus tapering recesses are formed between them, into which are driven the blocks *b b*. The wheel is then placed in a lathe, and the blocks turned off. The tire is then heated, and the wheel is dropped into it. This part of the operation is performed in a tight box, water in sufficient quantity to pour in, so soon as the wheel is in place.

The inventor says: I do not claim the introduction of wood between the rim and tire of locomotive and other railroad wheels.

But I *claim* confining the blocks of wood upon their sides, in the manner substantially as described, for the purpose of preventing them from being forced out and destroyed, as set forth.

No. 18,712.—AARON SMETHURST, of Philadelphia, Pennsylvania.—*Arrangement of Cylinders and their Connexions for Locomotive Engines.*—Patent dated November 24, 1857.—This invention consists in the arrangement of two cylinders A, on two cross section braces 4, in the centre of the frame-work commonly used for the working of steam engines, so as to drive two pistons D in each cylinder connected by the main rods G to two crank axles H, one ahead and the other aft the engine. In this arrangement the valve openings have two end openings Y Z in the steam chest B, and a centre opening 1; by which means the two pistons D^1 operate in one cylinder, and give direct power to two sets of drivers at the same time, ahead and aft the engine, thereby acquiring increased power and saving friction by avoiding an extra steam chest and valve gearing.

Claim.—The arrangement of the two double piston cylinders described, with their connecting means, in relation to the frame of the engine, as set forth.

No. 19,000.—FRANZ WINDHAUSEN, of Duderstadt, Hanover.—*Improvement in Locomotive Engines for Producing Increased Adhesion to the Rails when required.*—Patent dated December 29, 1857.—The nature of this invention consists in providing the smoke pipe D of locomotive engines with a fan blower, which is put in rapid motion by the escape of steam, which blows the smoke down on the rails in advance of the front wheels through pipes *c c*, the lower opening of which is within two inches of the upper surface of the rails.

The inventor says: In combination with the exhaust steam pipes of locomotive engines, I *claim* the apparatus described for drawing from the smoke box and forcing upon the rails in front of the driving wheels the products of combustion, when said apparatus is revolved to operate by the reaction due to the escape of steam from the cylinder, substantially as set forth.

I also claim the arrangement described for regulating the supply of hot air, smoke, and other products of combustion upon the rails, by causing the draught either through the chimney D or the pipes E, or both the chimney and the pipes, substantially in the manner specified.

No. 17,834.—JOHN M. HARTNETT, of Waukegan, Illinois.—*Arrangement of Means for Regulating the Fire of Coal-Burning Locomotives.*—Patent dated July 21, 1857.—When an intense heat is required, the

valves *c* in the pipes M are closed, and the valve *b* in the pipe J is also closed, and consequently the valve b^1 in pipe K will be open; the fire will then be supplied with a blast, which passes down the pipe I, through pipe H, into fan box *c;* thence through pipe K into fire chamber D, below the grate L, and through flues C into smoke pipe B. When the temperature of the boiler requires to be reduced, the valves *a* b^1 are closed, and the valve *b* in pipe J and the valves *c* in pipes M are opened. The blast will then pass down the smoke pipe B, through flues C, into the upper part of the fire chamber D, and through pipes M into the fan box *a*, from whence it is discharged through pipe J.

Claim.—The fan F placed within the box G, connected with the pipes I H, M M, and J K, provided with valves, and arranged substantially as shown for the purpose set forth.

No. 18,953.—WILLIAM H. BULLOCK, of Boston, Massachusetts.—*Arrangement of Deflecting Plates and Spark Receiver in Locomotives.*—Patent dated December 29, 1857.—A is a frame which supports the parts; B is a portion of the boiler; C the smoke arch, from which rises the chimney D; E the cylinders, from which the exhaust pipes lead to the central blast pipe F; *b* is the tube plate, the upper row outletting into the smoke arch at 2. Beneath the boiler and to the rear of the cylinder is suspended a reservoir G. This is provided with an outlet *c*, by which it may be emptied, and communicates with the bottom of the smoke arch by means of the bent pipe H, which enters the arch immediately in front of the tube plate. The front of the smoke arch, or that part furthest from the tube plate, is banked or built up as indicated by the curved lines 3 and 4. This backing inclines from all sides to the orifice of the pipe H; so that any cinders or ashes that may be drawn through the boiler tubes, and fall into the smoke arch, will be conducted by the inclined surface into the pipe, and through it to the reservoir G, from whence they may be removed at any convenient time.

The inventor says: I am aware that a high blast pipe has been used; but it is found it is not practicable in coal-burning engines as now constructed, without a means substantially such as described for freeing the smoke arch. Therefore, I do not claim the high or elongated blast pipe; but I *claim* the reservoir G, in connexion with the elongated blast pipe F, substantially as set forth.

No. 18,786.—JOHN E. WOOTTON, of Philadelphia, Pennsylvania.—*Improvement in Driving Box for Locomotives.*—Patent dated December 1, 1857.—The divided journal box B B is fitted into the bevelled seat in such a manner as to leave a space for the adjusting plate C between the top of the divided journal box and the dividing box A.

Claim.—The adjusting plate C, or its equivalent, in combination with the divided journal box B B, as described, for the purpose and in the manner set forth.

No. 17,215.—ROBERT HALE, of Roxbury, Mass.—*Improvement in means for directing the Exhaust of Locomotives.*—Patent dated May 5, 1857.—In the engravings A represent the blast pipe, which enters the

chimney for the purpose of producing a blast therein. The block *b*, which slides between the ledges *a*, can be moved to one or the other side by means of a lever F; and thus the blast in the exhaust pipe A can be divided off by pipe D, so as to use a part of it for heating the feed-water of the boiler, while the greater portion of it passes up through the chimney of the locomotive.

Claim.—The described device for the purpose of leading off a portion of the exhaust steam, to heat the feed-water, without interrupting or changing the direction of that portion of the exhaust not so employed, in the manner substantially as set forth.

No. 18,373.—EDWARD R. ADDISON, of Baltimore, Md.—*Rotary Exhaust Regulator for Locomotives.*—Patent dated October 13, 1857.—In the drawings, fig. 2 is a section of this exhaust regulator in the line *y y* of fig. 1; and in connection therewith the said drawing also represents the respective parts of a locomotive with which said invention may be combined for the purpose of regulating the escape of steam from its engines into its chimney A in such a manner as may be required to increase or diminish its draught.

The claim gives a correct idea of this invention in connexion with the drawings.

The inventor says: I do not claim the employment merely of revolving nozzles of varying size to effect the change of the escape through them alone, as in the patent of A. W. Roberts, dated May 8, 1855; nor do I claim a sliding series of conical openings, as in the variable exhaust pipes of F. Espanshade, patented March 14, 1854.

But I *claim* the arrangement of a variable series of openings in a revolving skeleton wheel, moved by gearing from the outside of the locomotive steam boiler, substantially in the manner described, when combined with the close case for excluding the ashes from the wheel, and thus securing its perfect operation in the manner described.

No. 17,208.—PETER S. EBBERT, of Chicago, Ill.—*Improvement in Heating Feed-Water Apparatus of Locomotives.*—Patent dated May 5, 1857.—The exhaust steam of the cylinder passes through the pipes B, in the usual manner, up through the chimney C; a part of said exhaust steam, though, passes through the branch pipes *c* up into the casing E F, which is closed tightly at both ends by means of the heads *a b*. This casing E F contains a series of tubes or coiled pipes G, which are all in communication with each other, and through which the feed-water of the boiler passes. The exhaust steam through the pipes *c* fills the casing E F, heats the pipes G, and finally escapes through the pipes *d*, while the condensed water collects in a groove of the bottom *b*, and is carried off by pipe *f*.

Claim.—In combination with the chamber enclosing the heating pipes, the inlet and exit pipes *c d*, so arranged as to cause the steam to circulate over, around, or through the heating pipes before it escapes, as set forth and explained.

No. 18,315.—JOHN KIMBALL, of Concord, N. H., assignor to ROBERT HALE, of Roxbury, Mass.—*Improved Tank for Locomotives.*—Patent dated September 29, 1857.—The drawing represents the tank, near one end of which a well or depression B is formed, into which a partition C descends, which divides them into two chambers D and E, between which there is no communication, except through the trap thus formed. The feed-water, being introduced into the chamber D, will flow through the trap and rise in chamber E. The exhaust steam is thrown into chamber D, the oil which it carries with it rising to the surface of the water; and the water for the engine is drawn off from chamber E, which will be constantly supplied through the trap from the bottom of the other chamber. No oil will pass into chamber E, as the trap will be constantly full of water, even when the tank is emptied for the purpose of cleaning.

In stating what he claims, the inventor says: I *claim* dividing the water tank into two compartments, thus introducing a trap between the two for the purpose of intercepting the passage of the oil to the boiler, as set forth.

No. 17,913.—LEVI BISSELL, of New York, N. Y.—*Improvement in Trucks for Locomotives.*—Patent dated August 4, 1857.—When the engine runs on a straight track, the blocks *n* rest in the lowest part of the double inclines *o*, thereby preventing any vibrations of the engine; and on coming on to a curve, the inertia of the engine is expended in going up the inclines *o*, as the truck moves laterally towards the inner part of the curve.

Claim.—Attaching trucks having four or more wheels to locomotive engines, in the manner substantially as described, so that the said truck is allowed a lateral motion under the engine, and moves upon a centre *h*, located between the drivers and the centre of the truck, in such a manner that the relative positions of the four or more truck wheels with the driving wheels, as determined by the straight or curved track, shall cause the body of the engine to assume the correct position relatively to said track, substantially as specified.

Also the inclined planes *o* or *q*, and blocks *n n* or *p*, or their equivalents, in combination with a truck of four or more wheels having a lateral motion under the locomotive engine; the whole constructed and acting substantially as and for the purposes specified.

No. 18,304.—HENRY SKINNER, of Fulton, N. Y.—*Improvement in Window for Locomotives, &c.*—Patent dated September 29, 1857.—The nature of this invention consists in providing the front part of a locomotive engine house, or the head light to a locomotive engine, with a window, the glass of which, by being heated with steam or hot air, will remain transparent when exposed to vapor or frost.

The inventor, in describing his improvement, says: I construct a tube in a cylindrical or any other desired form of about twelve inches in diameter and ten inches in length, I enclose within this another of about thirteen inches in diameter, and the two I enclose in another of about fourteen inches in diameter; all of the same length, as shown at *m, m, m,* in the drawings. To one end of these cylinders I adapt

a strong, firm piece of plate glass, as shown at A. The chamber or cavity C, between the inside cylinder and the cylinder next thereto, I fill with steam or hot air so as to heat the glass or glasses A adapted to the ends of the cylinders. The chamber or cavity B, between the outside and middle cylinder, I fill with charcoal, or some other non-conducting substance, so as to prevent the rapid condensation of steam. I surround the perimeter of the glass with woollen cloth, or some other non-conductor, that the glass or glasses may heat gradually. I adapt to the cylinder one or more glasses, as convenience may require. I communicate to chamber C steam from the boiler upon the locomotive, or heat from any other source, through the faucet H^1. I hang the glass upon the hinge in any ordinary form, or adapt it permanently to the tube. I construct in the bottom a sink shown at T to conduct off whatever may collect in the tube, with an aperture, as shown at E, to discharge the same. The elasticity of the heated air is so great, as to tend to keep out of the cylinder falling sleet or snow while the locomotive is in motion, which also aids in preserving the transparency of the glass.

Claim.—The inventor claims the application of heat to glass to prevent vapor or frost from collecting thereon, substantially as described.

No. 17,859.—JOHN F. PAGE, of Philadelphia, Pennsylvania, assignor to Himself and JAMES LANDY, of the same place.—*Improvement in Spark Arresters.*—Patent dated July 21, 1857.—The sparks, in passing up pipe A, will be deflected downward by the deflectors E F, and will pass through the side openings F, and through the openings E, in the bottom of part A, into the chamber H, which may be removed from the pipe and cleaned at any time.

The inventor says: I do not claim the arranging of a series of screens above, and so as to overlap one another, as in the spark arrester patented by George Holbrook in 1835.

Neither do I claim the use of two drums, placed one above the other, and each furnished with a screen, as in the spark arrester of Johannes Oberhauser.

But I *claim* the arrangement of parts relatively to one another, as specified, so as to effectually arrest the sparks of a locomotive, without obstructing the draught, as set forth.

No. 17,884.—ETHELRED MAY, of Boston, Massachusetts.—*Improvement in Spark Arresters.*—Patent dated July 28, 1857.—The nature of this invention will be understood by reference to the claim and engravings.

The inventor says: I do not claim combining with a chimney of a railway locomotive steam-boiler woven netting to prevent the escape of sparks and cinders therefrom.

Nor do I claim arranging a perforated or woven wire cone in a chamber placed over a smoke-box of a locomotive engine boiler, and made to communicate with such a flue, surrounded and being concentric with such chamber, the same being shown in the patent of R. A. Wilder, dated October 31, 1854.

Nor do I claim surrounding the exhaust pipes with two cylinders, perforated or not, and having the outer one connected with rings, with the side of the smoke arch, as described in J. Williams's patent of March 6, 1855.

Nor do I claim prolonging an unperforated tubular smoke-stack down to near the bottom of the smoke-box, and providing it (the said stack) with one large opening for the reception of the smoke and products of combustion.

But I *claim* my arrangement of the spark arrester within the smoke-box of the locomotive steam-boiler, so that the stack or chimney shall be prolonged down into the smoke-box, and made of wire gauze or perforated plates, and otherwise so constructed as specified, that the entire track of the smoke shall be through the gauze or perforated plates.

No. 17,875.—Henry H. Graham, of Paterson, New Jersey.—*Improvement in Spark Arresters.*—Patent dated July 28, 1857.—The sparks, as they are deflected by the core *d* through the conductors *e*, travel in opposite directions to the mouths between the slats 1; but as they cannot escape, they are thrown against the deflectors *g*, by which they are slightly checked, so that they scatter and fall into the outer casing *b*, while the smoke and gases pass between the slats 1, through screens 2.

The inventor says: I do not claim radial spark conductors, screens, or slats, in themselves, nor their use in smoke pipes and spark arresters.

But I *claim* placing the slats 1 1 in the vertical sides of the radial spark conductors *e*, at a higher elevation than the screens connecting the bases of said conductors, and with the mouths between said slats opening towards the angle between said spark conductors, and in the opposite direction to the accelerated motion of the products of combustion, substantially as and for the purposes specified.

No. 18,613.—William Mt. Storm, of New York, N. Y.—*Improvement in Generating Anhydrous Steam.*—Patent dated November 10, 1857.—In the engravings, *a* is the steam space, X the water line, *b* the fire-box, *c* the grate, *d* the flues, *e* the feed-pipe for supplying water to the boilers, *f* the chimney; d^1 is a large flue, *h* is a long cylindrical vessel, or boiler, passing from the front of the main boiler, through the fire-box, directly on through the great flue, until it reaches the smoke-box I; *h* also has a steam dome *k* at the front of the main boiler, and is provided with a safety valve, or more properly a pressure valve *l*; the safety valve *m* of the main boiler acting as the common safety to both. *h* has also gauge cocks, feed pipe, &c., and in fact whatever may be necessary to render it complete as a separate boiler. The branch *n* of the feed-pipe supplies *h* with water. Z Z is the water line of *h*.

Claim.—The arrangement of means, substantially such as set forth, for rendering steam anhydrous, without the exposure of the tubes or drying vessel to the direct action of the fire or hot products of combustion.

No. 17,372.—ADOLPH HAMMER, of Reading, Pa.—*Improved Sugar Boiling Apparatus.*—Patent dated May 26, 1857.—The pipes of this apparatus are arranged as represented in the engraving, the steam entering pipe B, and passing successively through pipes *b*, *c*, *d*, *e*, *f*, *g*, *h*, *i*, *k*, and escaping at *l*, as represented by the arrows. The main pipe rests in the bearings M and N, and, together with the branch pipes, can be turned into the upper part of the boiler, thus affording an opportunity of cleaning the bottom of the boiler without removing the pipes from said boiler.

The inventor says: Disclaiming connecting a series of branch pipes with and on to a main pipe, upon which said branch pipe may be rotated, in the manner described by Alfred Stillman, in his patent of May 16, 1846;

I *claim* the peculiar arrangement of pipes described, whereby the steam is caused so to travel as to force one continuous and unbroken stream through the pipes, and to form a proper compensation or equalization of temperature throughout the whole surface of the coil, substantially as set forth.

No. 17,142.—BOWEN EATON, of Roanoke, Ind.—*Arrangement of Ports in Steam Cylinders.*—Patent dated April 28, 1857.—The steam enters the cylinder A through one of the end ports *a*, which are opened and closed in the usual manner; and acting on piston B, it forces along said piston until it passes the escape orifice J, when the steam escapes. The steam then enters at the other end of the cylinder, and the motion of the piston is reversed.

Claim.—The arrangement of the central exhaust and end steam ports as set forth, for the admission of steam at each end of the cylinder only, and its eduction from the central port only, the latter being controlled entirely by the piston of the engine cylinder.

No. 16,747.—CHARLES F. POND, of Hartford, Conn.—*Improvement in Generating Steam.*—Patent dated March 3, 1857.—E are the top plates of boxes, which boxes communicate with each other by means of pipes G, and with the steam in the boiler A by means of pipe C.

The inventor says: I do not claim, either singly or in combination, the boiler pumps, steam chest, or the surrounding of the same with steam or heated air; nor do I claim any part of said apparatus by itself, or the generation of steam by bringing water, either in large or small quantities, in contact with metal heated directly by fire.

I *claim* the method of generating steam from water introduced in numerous fine jets I, and thrown upon heated metallic surfaces E, substantially as described, when this is combined with the heating of the said metallic surface on which the jets of water are to be thrown to be evaporated by the contact of steam, generated in a separate boiler A connected therewith, for circulation and other purposes, substantially as described.

No. 18,319.—JULIEN FRANÇOIS BELLEVILLE, of Nancy, France, assignor to ROBERT MURPHY, of New Orleans, La.—*Improvement in Steam Generators.*—Patent dated October 6, 1857.—This improvement

relates to generators evaporating water or any other liquid without danger of explosion, at a pressure that can be varied at pleasure. The chief peculiarity of this improvement consists in the arrangement of the tubes for generating steam. The tubes are arranged in a horizontal position with respect to the furnace. The generator consists of tubes or coiled pipes, in any suitable number, bent into any desired form, and having a greater or less number of cylindrical, elliptical, or other convolutions, and they may be either horizontal, vertical, or inclined.

The inventor *claims* the general disposition and arrangement of the steam generator, and the parts connected therewith, consisting of tubes in which water or other liquids are converted into steam, substantially as specified.

No. 18,460.—ALEXANDER B. LATTA, of Cincinnati, Ohio.—*Improvement in Steam Generators.*—Patent dated October 20, 1857.—The engravings and claim explain the nature of this invention.

The inventor says: I *claim* the application of the pump E to a coiled boiler, in combination with the pipes G and strainers D, the whole being arranged and operated in the manner substantially as described, for the purpose of causing the water to circulate through the coils from the lower part of the water jacket, and of separating the steam generated in the coils from the water, and then conducting it into the steam chamber or upper part of the water jacket, and of returning the water unconverted into steam back into the lower part of the water jacket, as set forth.

No. 17,675.—ROBERT HALE, of Roxbury, Mass.—*Improved apparatus for Separating the Oily Particles held in suspension by Steam.*—Patent dated June 30, 1857.—The steam entering by pipe B is thrown against the partition C, upon the surface of which the particles of oil which it contains are condensed, and running down the partition C, the oil passes through opening *a*, into chamber G and passage H, whence it escapes through outlet K to a suitable reservoir. Any particles of oil that may have fallen below the shelf D will be impelled against the partition C, and will pass through opening *b*. The steam passes to the centre of case A between partitions and shelves E^1, C^1, D^2, D^3; the remaining particles of oil pass through apertures a^1, b^1, into pipe K; while the steam escapes through pipe I.

Claim.—The described apparatus for separating oil from steam, operating in the manner substantially as set forth.

No. 17,683.—DANIEL LASHER, of Brooklyn, N. Y.—*Improvement in Metallic Packing for Steam Pistons.*—Patent dated June 30, 1857.—The nature of this invention will be understood by reference to the claim and engravings.

The inventor says: I do not claim metallic springs intervening between the piston and the packing rings.

But I *claim* the manner described of constructing the bent or folded metallic springs *g*, to take an even and extended bearing on the inner side of the packing ring or rings *e f*, when provided with the lips or

projections 2, to keep the springs properly in place, substantially as specified.

No. 18,048.—LUCIUS J. KNOWLES, of Warren, Mass.—*Improvement in Steam Pressure Regulators.*—Patent dated August 25, 1857.—When the pressure of the steam in pipe *b* is less then the amount indicated by weight B, then the apparatus is in the position as represented in the engraving, but as the pressure of the steam increases it acts upon the elastic disk *c*, thereby lifting cup H and lever F.

Claim.—Supporting the disk C by concentric rings I and rods *p*, in the manner substantially as set forth.

No. 17,855.—WILLIAM S. GALE, of New York, N. Y., assignor to PETER POILLOU, of the same place.—*Means for Rendering Joints Steam-tight.*—Patent dated July 21, 1857.—The steam, as it is let into the cylinder, rushes in between the piston and cylinder, and fills up the grooves *i* and the intervening spaces between the piston and cylinder, where it practically forms a complete packing.

The inventor says: I wish it to be understood that I do not claim the grooved surfaces in themselves, as these have before been used for other purposes, and have been used in connexion with air engines.

I *claim* the method described of causing steam to become a packing to itself in steam cylinders or other parts of steam machinery, by allowing the steam to act in one or more grooves, substantially as specified.

No. 17,069.—JOHN AVERY, jr., of Lowell, Mass.—*Improvement in Steam Traps for Relieving Steam Pipes of Water.*—Patent dated April 21, 1857.—The operation of this steam trap is as follows: When the engine is at rest, and the fires go down, the mercury in the holder B contracts by being cooled and falls within its holder. This allows the elastic diaphragm *d* to drop from collar *k*, and there is then a continuous opening through the trap by means of the openings *m*, holes *i* in the ring *e*, diaphragm *d*, and flange *c*, and the passages k^1, and the condensed water may escape. When steam is generated, or the boilers are heated up, the mercury in holder B forces diaphragm *d* against collar *k*, and closes up the opening *m*.

The inventor says: A pipe coupling has been made so that the expansion of a long pipe may be made to close or partially lose the opening between it and its fellow. But it is not convenient, except for certain purposes, to have this long pipe; and a short one will not, on account of its limited expansibility, serve the purpose. Besides, this only regulates the flow of water or steam, and does not admit of allowing the water of condensation to pass off whilst the steam is retained, and is not a steam trap in the sense in which I claim one. I make no claim to such an arrangement.

I *claim*, in combination with the outer case A, the enclosed mercury holder B, and diaphragm and openings *m* K^1, for the purpose set forth.

No. 17,656.—SYLVESTER W. WARREN, of Brooklyn, (E. D.,) N. Y., assignor to DEXTER N. FORCE, of New York, N. Y., and SYLVESTER W. WARREN, aforesaid.—*Improvement in Steam Whistles.*—Patent dated June 23, 1857.—The steam from pipe *a* passes through passages *c*, and, escaping at the mouth 1, acts upon the whistling mouths *e*, the lower one of which serves to let off any condensed water, while the others are sufficiently high above cap *b* for the steam to act upon with a higher pressure, and to give a distinct sound.

Claim.—The cap *d*, and whistling mouth or mouths *e*, connected to the steam pipe, substantially as specified.

Also placing two or more whistling mouths or edges in the whistle at different distances from the orifices for the escape of steam; so as to adapt one whistle to different pressures without changing the position of any of the parts, substantially as specified.

No. 18,641.—J. R. HOPKINS, of Lincoln, Me., assignor to Himself and GUSTAVUS F. SARGENT, of Bangor, Me.—*Improved Mechanism for Operating Pilot Bells on Steamers.*—Patent dated November 17, 1857.—This invention is intended for communication between the pilot house of a ship and the engine room or other place. It is so constructed that by pulling a knob C in the pilot house, a cylinder I is rotated in the engine room, on which cylinder is painted the desired signal, at the same time calling attention by a bell H. There are also two bell hammers N, which are arranged in such a way that the striking of them assures the rotation of the cylinder to the desired signal.

Claim.—First. The arrangement of the knob C and slotted plate B, substantially as shown, so that the several orders may be transmitted to the engineer, or the cylinder I rotated as desired, to present such orders by moving one and the same knob in different directions.

Second. The bars *o p q r u*, levers q^1, provided with pins u^1, plates L and o^1, segment rack K, pinions C^1, and rods *v*, on the shaft *w*, when the whole is arranged to operate as and for the purpose set forth.

Third. The employment or use of the two levers M M^1, provided with bell hammers N N, and operated by means of the bar x^1 attached to the plate L, and provided with springs z^1 z^1 and the plate P, the bar and plate being provided respectively with the projections or shoulders y^1 y^1 f^2 f^2, and the whole arranged as shown and described.

No. 18,847.—MOSES C. HAWKINS, JACOB W. GOODWIN, and JAMES CUMMINGS, of Erie, Pa.—*Improved Spring Valve Cock.*—Patent dated December 15, 1857.—By this invention, in connexion with the ordinary air cock, there is employed, first, the air valve *z* as shown in the engravings; second, the valve gauge *y* and spiral spring *v*. These several parts form, in combination with each other and with the ordinary air cock, the peculiar mechanical contrivance called by the inventors a "valve air cock."

The inventors say: We do not claim any part of the air cock, constructed as described, when taken separately.

But we *claim* the valve Z, valve gauge *y*, with spiral spring V, in combination with the ordinary air cock, in the manner described and for the purpose set forth.

No. 17,583.—BENJAMIN L. PHILLIPS, of Providence, R. I.—*Improvement in Valve Connexions for Steam Engines.*—Patent dated June 16, 1857.—By means of lever P the cams O and O^1 can be adjusted simultaneously to such a position that the rods L and L^1 will come in contact with them at different points of the strokes of the piston, and thereby cause the rods to be bent far enough for the centres *e* to pass the line of culmination between the centres of the connecting pins *f g;* then, by the action of the weights N and N^1, the steam valves I and I^1 are suddenly closed. The rods L and L^1 are straightened again by returning the movement of the connecting block F; thus, by adjusting the cams O and O^1 nearer the rods L and L^1, the steam will be cut off earlier in the stroke, and vice versa.

Claim.—Interposing the jointed bars or rods L L^1 to be operated upon by the cams O O^1, or their equivalents, between the valves and the connecting block F, substantially as and for the purposes set forth.

No. 18,211.—JOHN C. PENNINGTON, of Paterson, N. J.—*Improvement in Valve Gear for Oscillating Steam Engines.*—Patent dated September 15, 1857.—When this engine is in operation, a reciprocating motion is given to rod *h* and arc *k l*, and the valve rod *p* is operated by means of rod *n*, which is pivoted to slide *o*, which is secured to valve rod *p*. By operating rod *s* the crank lever *x r* can be turned on its fulcrum, and the position of pin *m*, within the slot of arc *k l*, may be adjusted, whereby the steam may be cut off at any desired point, and the motion of the machine may be reversed.

Claim.—A valve gear for an oscillating steam engine, composed of an eccentric set, substantially as described, and a slotted arc, the curve in which is concave towards the shaft, and provided with a sliding pin, which is connected with the valve, or the equivalents thereof; and this I claim whether the slot be long enough for reversal, or of such length as may be sufficient for running the engine in one direction only.

No. 18,258.—NORMAN W. WHEELER, of New York, N. Y.—*Improvement in Valve Gear for Oscillating Engines.*—Patent dated September 22, 1857.—In describing his improvement the inventor says: Upon the rock-arm M I place a secondary rock-shaft or arm, which can oscillate upon the bearing L, and takes hold of the valve-rod I at K. This secondary rock-shaft is actuated independently of the rock-arm M by means of the lead lever J, which is connected with and moved by the piston-rod through and by means of the link S and stud R. The motion in this manner derived from the piston-rod should equal the lap and desired lead of the valve F. The remainder of the desired valve-throw is derived directly from the oscillation of the working-cylinder, by means of and through the rock-shaft and rock-arms M and N, and the radius-rod O.

The inventor, in stating what he claims as new in this invention, says: I am aware that the "eccentric throw" and "piston head," and that the "oscillating throw" and "eccentric" or "cam lead," have been used before. These I do not claim.

But I *claim* actuating the valves of oscillating steam engines by the combined movements of the cylinder and piston-rod, substantially as described.

No. 17,689.—SIDNEY MALTBY, of Dayton, O.—*Improvement in Valve Gear for Steam Engines.*—Patent dated June 30, 1857.—The valve crank-wrist H is secured to the sliding-plate *b* by moving the rod C in the direction of the arrow; the elbow-link *d* will be moved in the direction of arrow 2; this movement carries the valve crank-wrist from the centre of the crank to any point between said centre and the periphery of the same, and the throw of the valve will be changed; and by moving the plate so as to carry the wrist from one point near the periphery to another point directly opposite the same, the engine will be reversed, and the lead transferred to the opposite motion of the engine. By moving the sliding-plate I, by means of set-screw F, in the direction in which the engine is running, the wrist of the valve-crank will be thrown forward of a point at right angles to the engine crank-wrist.

The inventor says: I do not claim effecting the reverse and cut-off by having the wrist adjustable on a link or slotted arm; because with the first device great complication is necessary in order to produce the desired results, and in the second a like complication is necessary in order to effect the reverse and cut-off while running.

But I *claim* the means described for effecting the reverse cut-off and lead, when said means are arranged directly on the wrist of the engine crank, and used as a substitute for the common link and hook motions, substantially as and for the purposes set forth.

No. 16,809.—JAMES P. ROSS, of Lewisburgh, Pa.—*Improvement in Valve Gear of Direct-Action Steam Engines.*—Patent dated March 10, 1857.—This is an improvement upon the invention of James C. Ross, patented on the 22d day of January, 1856. By the action of the elastic lever I on the yoke H, a movement is suddenly given to start or give a lead to the valve, just at the termination of the stroke of the piston, in either direction, to admit steam to the cylinder for the return stroke of the piston. This elastic lever is applied instead of the two counterpoise levers and the weight described in said letters patent. The amount of lead given to the valve can be increased or diminished by adjusting the nuts n n^1 upon the rods l l^1.

Claim.—The elastic lever I, applied and operating substantially as described, in combination with the oscillating yoke H, the traveller p^1, and the roller r, or its equivalent, for the purposes set forth.

No. 17,585.—SAMUEL SWARTZ, of Buffalo, N. Y.—*Improvement in Valve Gear of Steam Engines.*—Patent dated June 16, 1857.—In order to vary the cut-off to any point of the stroke, the thimble P on the sleeve r of valve-stem I is raised or depressed, and consequently the outer end of valve-toe L is raised or depressed, and the point where the tappet a leaves the valve-toe is varied.

Claim.—First. The tappet or valve-lifter upon a wheel or segment, and giving said wheel or segment a rotary motion in combination with a reciprocating motion, for the purposes substantially as set forth.

Second. Arresting the reciprocating motion of the said wheel or segment, and commencing its rotary motion at a point where its rotary motion will cause the tappet to strike the valve-toe on a line,

(or nearly so,) drawn through the centre of the joint, and perpendicular to the line of reciprocating motion, for the purposes and substantially as described.

No. 18,837.—HORATIO ALLEN, of New York, N. Y.—*Improvement in Cut-off Valve Gear of Steam-Engines.*—Patent dated December 15, 1857.—The claim and engravings explain the nature of this invention.

The inventor says: I do not claim the use of a controlling chamber or dash pot, to break the fall of the valve, as they have long been used in connexion with valve gear.

But I *claim*, as an improvement on the cut-off valve gear, patented by Horatio Allen, February 9, 1849, and by Samuel H. Gilman, December 10, 1850, the combination of a plunger operating to force a fluid through an orifice, or of the dash pot with secondary chamber with the loose toe, whereby the fall of the toe, when tripped, is controlled, substantially in the manner and for the purpose set forth.

No. 16,515.—PETER S. WEIMER and SAMUEL P. FRANCISCO, assignors to SAMUEL P. FRANCISCO, of Reading, Pa.—*Improvement in Operating the Valves of Steam Hammers.*—Patent dated January 27, 1857.—The object of the slots *d* and blocks *f* are to admit of the spreading or expanding of the levers V W, whilst they continue to be vibrated by the wrist pin *e* passing through them into the crank V. An eccentric *h* is arranged on the end of the shaft Q, which eccentric works in an open eccentric in the lever W, so that the turning of the shaft Q by the lever S^1 on one of its ends will also turn the expanding lever W on its other end. On the shaft P is also another eccentric *i*, which works in a similar manner with the expanding lever V; the shaft P being turned by its lever R on one end, also turns the expanding lever V on its opposite ends.

On the valve rod K are two toes *m m*, between which the levers V W vibrate. One of the levers V W represents the inlet port, and the other the escape, and consequently, just as they are spread apart, will they increase the motion of the slide valve L. The levers V W can be set independent of each other, so that the inlet and exhaust may be varied at pleasure.

The inventors say: We are aware that expanding wedges in a vibrating arm have been used for working the valve, and that a rod made adjustable by screws and nuts has also been used for this purpose; these we do not claim.

We *claim* so arranging the crank U, and the expanding levers V W on the axes or trunnions of the hammer stock, as that they can be separately adjusted thereon; but at the same time worked with the rocking or rolling of the hammer shaft, for the purpose of regulating at any time the power and motion of the hammer, by or through the movement of the slide valve, as set forth.

No. 16,593.—WILLIAM H. ELLIOT, of Plattsburg, N. Y.—*Arrangement of Means for Controlling the Throttle Valve of Marine Engines.*—Patent dated February 10, 1857.—The chamber *a*, open at the bottom,

is placed in the deadwood as near the lowest line of the wheel or propeller as possible. The cylinder *d*, pipe *b*, and all but the lower portion of *a* contain nothing but air; and as the stern of the vessel sinks into or rises from the wave, the pressure of the water upon the air in *a b d* operates the diaphragm piston *e h*, which latter is held down by spring *s* and the throttle valve rod *j*, for the purpose of equalizing the motion of the engine.

The inventor says: I do not claim regulating and controlling the supply of steam admitted to the cylinder of a marine engine by the varying pressure of the water, caused by the varying depths to which the vessel may be immersed; neither do I claim the devices employed by me for that purpose, separate from the combination and arrangement in which I use them.

But I *claim* the chamber A, cylinder D, plunger H, and spring S, when arranged in relation to the engine, and to the hull of the vessel and to each other, in the manner described, and for the purposes set forth.

No. 17,718.—M. E. Stacy, of Flemington, Ga., assignor to W. John Way, of the same place.—*Arrangement of Valves in Steam Cylinders.*—Patent dated June 30, 1857.—When the beam *b* oscillates, the balls S will alternately close and open the steam ports *a* and a^1; and when the steam port is closed, the channel *m* is opened for the escape of the exhaust steam; but when the port is opened, and valve S is in its lowest position, the exhaust passage *m* is closed.

Claim.—The arrangement of valves in steam cylinders described, operating in the manner and for the purpose set forth.

No. 16,570.—George H. Reynolds, of Medford, Mass., assignor to Himself and D. B. Hinckley, of Bangor, Me.—*Improvement in Operating Cut-off Valves of Steam Engines.*—Patent dated February 3, 1857.—A is the steam chest B; an ordinary slide valve, with steam and exhaust ports *a b*; *s* is the valve stem. F F^1 are balance puppet valves, their stems being provided with rolls *f* f^1, which latter work against slides H H^1; these slides are controlled by the arms D D^1, which, by means of ring E, are connected to the governor rod C. The broken lines represent another position of the parts D D^1, E.

Claim.—Operating the cut-off valves F F^1, in connexion with an ordinary slide valve by the inclined sliding dogs H H^1, or their equivalents, in the manner substantially as set forth.

No. 17,643.—James H. Simmons, of Erwin, N. Y.—*Improvement in Cylindrical Throttle Valves for Steam Engines.*—Patent dated June 23, 1857.—On starting the engine, the latch *h* is set to such a position by raising lever 5, that the steam ports *b* shall be fully open, and the latch *h* is then in contact with the upper shoulder of recess K, in cap D. In the event of any sudden stoppage of the crank shaft, the weight of the lever 5 will cause a change of position of the latch from its contact with the upper shoulder to the lower shoulder of the recess K, and, in its turning, the ports *b* are closed, and the motion of the engine is stopped.

Claim.—The arrangement of the latch *h* upon the stem of the valve, playing in the recess *k*, within the interior of the head of the cylinder, as set forth.

No. 16,351.—CORNALL BRADLEY, of Manchester, Va.—*Improvement in Valves for Steam Engines.*—Patent dated January 6, 1857.—Steam being admitted into the steam chest B, it will press down the valve E^1 on its seat; but, as there is no part of the valve exposed to the action of the steam downwards except the part overlapping the ring D, there can only be as much pressure downwards as the area so exposed, at the same time the steam is pressing on the circular part of the same valve inwards into the ring or chamber, and the real pressure on the face of the steam valve is as the area exposed to downward pressure on the face G, less the area exposed to a contrary pressure into the chamber at G. The space between E^1 and E^2 is in communication with the atmospheric air by means of hollow stem J.

The inventor says: I do not confine myself to a circular chamber on the valve rod for the back of the valves to fit into, as any other form would work equally as well.

I am aware that valves have been made, heretofore, to work against the steam chest cover; this I make no claim to.

I *claim* making the valves of steam engines with two surfaces—one being exposed to the action of the steam downwards against the valve seat, the other surface exerting a contrary pressure into the chamber, the inside of said chamber being in communication with the atmosphere; the whole being arranged substantially as specified, for the purpose set forth.

No. 16,765.—NORMAN W. WHEELER, of Cincinnati, Ohio.—*Improvement in Operating Valves for Steam Engines.*—Patent dated March 3, 1857.—Steam being admitted through throttle valve 30, it will pass through 8, the openings *d d d d* in 15, through 11 and 5 into 1, thence out through 23 and 27 into 29, and press upon 16; and the area of 16 being greater than the opposing area of the opening in the seat 13, and the working piston standing over and closing the opening of 6 into 1, so that no steam can pass into the space between 12 and 16, 16 will be forced to its seat, and 17 opened, which, being accomplished, steam will pass through 30, 8, *d d d d*, 11, 5, 1, 7, 13, 9, and 31. This escape of steam will immediately cause 15 to be closed and 14 to be opened, for the sum of the areas of *d d d d* is less than any part of the passage beyond, and the area of 15 is greater than the opposing area of the opening in 10; hence the pressure in 8 will be greater than the pressure in 11 and 5. Let *a* equal the pressure in 8, and *x* that in 11 and 5; let *c* equal the area of 15—$d+d+d+d$, and *e* the area of the opening in 10; then, when $a-x \times c$ is greater than $a \times e$, 15 will be seated, the escape of steam arrested, 14 opened, and steam introduced into 1 upon the opposite side of the working piston, and move it towards the right hand; soon after 23 is covered by the passage piston over it, 22 will be opened immediately before 6 is opened in like manner, and a pressure will be obtained in 29 before steam can pass through 6 into the space between 12 and 16, thus

causing 16 to remain closed until the piston shall have passed over and beyond 20, when steam will pass into 28, close 17, open 16, release through 6 and 12, and cause the differential pressure to act upon 14 in the same manner as described for 15, thus procuring a continuous reciprocating motion of the piston.

The inventor says: I do not claim actuating simultaneously the induction and education valves by means of steam derived from the working cylinder. I do not claim the passage of the piston over the exhaust port at the termination of a stroke, when the object is merely to cushion and arrest the motion of the piston.

I *claim*, 1st, actuating the release valves of a steam engine by means of steam pressure derived from the working cylinder, and released therefrom by the passage of the working piston over and beyond appropriate ports, when the receiving valves are actuated by other means substantially as described, or in any equivalent way.

2d. Actuating the receiving valves of such engine by means of the differential pressure of steam flowing into the steam cylinder, when the resistance to be overcome arises in whole or in part from steam pressure upon one of a pair which are connected together substantially as described, or in any equivalent way.

3d. Opening the exhaust passages into the cylinder near each end thereof, but within the stroke of the piston, for the purposes set forth.

4th. Connecting puppet valves together in pairs, so that steam pressure upon the one which is closed will hold its fellow open, as set forth.

No. 18,925.—Horatio O. Perry, of Buffalo, N. Y.—*Improvement in Giving Motion to Valves of Steam Engines.*—Patent dated December 22, 1857.—The inventor says: My improvement applies to such engines, and such only, as employ semi-rotating or rolling valves, which are released and allowed to shut automatically. It relates to the means of shutting such valves when they are detached from the positive mechanism, and of stopping the motion without shock at the right point. Its effect is to shut such valves rapidly and quietly without necessitating any dash pots or air cushions to stop the motion.

Claim.—1st. The above described method of shutting a rolling or partially rotating valve by pulling on a link so attached that its effect in rotating the valve decreases as the valve assumes its most desirable shut position, and tends to revolve it in the reverse direction, when the valve revolves by momentum past such position, when operated substantially as and for the purpose set forth.

2d. The above described method of operating said link by the pressure of the steam, so that the whole amount of power available in shutting shall be always proportional, or very nearly proportional, to the resistance for the purpose of enabling the valve to stop in the proper position under all pressures of steam, as set forth.

No. 16,668.—Samuel R. Wimot, of Watertown, Conn.—*Improvement in Operating Valves of Steam Engines.*—Patent dated February 17, 1857.—The valve rod G is twisted at *f* and at *g*; its end being

pivoted in an arm *d* projecting from guide H, which guides the piston rod. *C* is the cylinder. The valve rod is twisted to an extent equal to the angular motion of the cone *m* of the valve. The flattened portion of the valve rod, between *f* and *g*, forms a traverse rod, which is traversed by a slide I that is pivoted in an arm *h* projecting from cross-head B; the movement of this slide is limited by stops *e* and *i*. The operation will be understood from the engravings. Pipe *a* leads to the boiler, *b* to the exhaust pipe, passage *j* into the cylinder, as also *k*, by means of pipe *c*.

Claim.—The valve motion described for operating the valves of steam engines, consisting essentially of a twisted traverse rod, of a travelling slide, and of the stops which limit the turning of the slide, or their equivalents, combined together, and operating substantially as set forth.

No. 18,197.—Robert H. Fletcher, of Brooklyn, N. Y.—*Improvement in Operating Valves of Steam Engines.*—Patent dated September 15, 1857.—The steam passes from steam chest F, through channel *d*, into space O, and forces piston K, together with piston P, to the right, thereby opening channel *a*. As the steam presses on piston B, the latter is moved to the right, the exhaust steam escaping through channels *b*, *x*, *p* and *g*. When the piston has arrived at the end of its course, the valve E is suddenly moved by an eccentric, or otherwise, so as to close passage *d* and to open passage *c*, when the movement of the valves will be reversed.

Claim.—The arrangement of the slide valve E with the pistons P and K and valves Z and M with their respective steam ways, operating together in the manner and for the purposes described.

No. 18,311.—S. Lloyd Wiegand, of Philadelphia, Pa.—*Improvement in Variable Eccentrics for Operating the Valves of Steam Engines.*—Patent dated September 29, 1857.—This improvement consists in the arrangement of a double oblique slide upon the shaft A, which carries the eccentric. The permanent eccentricity is produced in the example of this invention, represented in the drawing, byma king the slot in the eccentric which receives the double oblique slide out of the centre of the eccentric, as will be seen by reference to fig. 3. But the same eccentricity may be obtained by making the said slot in the centre, and making the double oblique slide eccentric in the proper direction to the shaft. The claim will complete the description of this invention.

The inventor says: I do not claim broadly the invention of variable eccentrics; an example of such a device is seen in B. H. Wright's patent, October 26, 1854. In this device the throw of the eccentric is varied by means of a pair of angular arms which pass through the eccentric. This method does not allow the stroke of the eccentric to be reversed; but in my improvement the eccentricity is at all times permanent, in consequence of placing the whole eccentric at right angles to the direction of the motion of adjustment, and the eccentricity is thus rendered unvarying, while the length and "lead" of

the throw can at all times be changed by the simple movement of a lever without stopping the engine.

I *claim* the arrangement of the double oblique slide B upon the shaft A, said slide passing through the eccentric C, and otherwise operating substantially as set forth.

No. 17,348.—GEORGE P. CLARKE, of Newark, New Jersey, assignor to Himself, and WILLIAM M. LITTELL, of the same place.—*Arrangement of Safety-Valves within Steam Boilers.*—Patent dated May 19, 1857.

Claim.—The arrangement of the inverted valve *c* in globe A, pressed to its seat by the spring D, from below the clevis K and the escape pipe I, extending through the boiler P; all constructed and arranged within the boiler as described, and for the purpose set forth.

No. 17,712.—THOMAS WINANS, of Baltimore, Maryland.—*Improvement in Slide Valves for Steam Engines.*—Patent dated June 30, 1857.—The object of this improvement is to diminish the wire-drawing of steam, which occurs when a cut-off valve is closing, which is accomplished by connecting the two passages *c d* of the slide valve by a channel *b*, thereby allowing the steam to pass through both openings alternately into either end of the cylinder, the valve being so constructed as to close and open each opening at the same instant.

Claim.—The connecting of the passages through the ends of the main valve, denominated the Meyer's valve, by the channel or opening described.

No. 18,667.—NATHAN ATHERTON, of Philadelphia, Pa.—*Improvein Slide Valves for Steam Engines.*—Patent dated November 24, 1857.—The claim and engravings explain the nature of this invention.

Claim.—The construction of the slide valve with curved edges, *a, b, c, d, e, f, g, h,* arranged with such a lap over the faces of the steam chest that the steam shall be admitted in front of the piston an instant before the stroke has been completed, and so that the exhaust shall not be made behind the piston until after the stroke has been entirely completed, substantially as described.

No. 16,358.—ROBERT H. FLETCHER, of Brooklyn, N. Y.—*Improvement in Operating Slide Valves of Steam Engines.*—Patent dated January 6, 1857.—As represented in fig. 1, the steam passes from the induction chamber *a*, through passage 3, into chamber 6, keeping the slide, composed of pistons 7, 8, 9, and 10, and stems J, in its position; the steam enters the cylinder A, through passages 2 and *e*, and operates the piston, which, at the end of its stroke, operates lever *d*, moving the different parts into position of fig. 2, when the steam passes from passage 1 into chamber 4, and through passage *f* into cylinder A.

Claim.—The arrangement of the slide valve F and stem J, with their operative parts within the steam chest, as described, so that they may

be operated from the piston head within the steam cylinder, by means such as set forth.

No. 18,225.—BARNABAS RUBERTS and ALEXANDER CRUMBIE, of Brooklyn, N. Y., assignors to Themselves and JOHN BENSON, of the same place.—*Improvement of Passages and Means for Working Steam Valves by the direct action of Steam.*—Patent dated September 15, 1857.—Steam being admitted to the steam chest A^1, it passes down into cavity *e*, at the left side, and thence under cavity *d* and cylinder A, as indicated by arrows, and starts the piston to the right, while the steam contained to the right of the piston is passing out at the exhaust port G; when the piston H has passed the opening *a* on the right, the steam passes up through channel *a*, moving piston J to the right, and operating valve H for the next stroke.

The inventors say: We are aware that the valves of steam engines actuated by steam pressure applied to pistons, other than the main working pistons, have been used, and therefore we disclaim such use. We are also aware of the patent of Norman W. Wheeler, July 31, 1853, and we therefore claim no part, device, or thing patented to him.

But we *claim* the arrangement of the steam channels *a*, *b*, *c*, which are opened and closed by the travel of the main piston, connecting the steam chest and cylinder as described, in combination with the pistons J J, of equal areas, or their equivalents, substantially as described and set forth.

No. 17,893.—JOHN A. REED, of Jersey City, N. J.—*Arrangement of Valves and Passages to the Cylinders of Steam Engines.*—Patent dated July 28, 1857.—When this arrangement is applied to an oscillating steam engine, the steam enters the cylinder through trunnion B, passages *a* and *i*, and ports *h*, the latter being opened or closed by means of ring valve E. The steam escapes through ports 1 and *k*, passage *b*, and trunnion C, the escape of the steam being governed by means of ring valve F.

Claim.—The employment in each cylinder head for the induction, cutting off, and eduction of steam, of two ring, valves with an arrangement of seats, ports, and passages, substantially as described.

VII.—NAVIGATION.

No. 16,776.—EDWARD L. SEYMOUR, assignor to JAMES G. WRIGHT, CHARLES WRIGHT, and HENRY J. GEYER, of New York, N. Y.—*Nautical Alarm.*—Patent dated March 3, 1857.—The frame *a* is placed upon a buoy or boat, the motion of which will cause the pendulum *d* to swing upon its axis *e*. The ring *f* will then actuate the arms *g* of the hammer rods *h*, and the hammers *h* will strike the gongs *k*.

The inventor says: I *claim* the combinination of frame, rods, hammers, axles, springs, pendulum, levers, and gongs or bells, substantially as above described, to be placed upon buoys, floats, or vessels of any kind, for the purpose of causing alarms, and giving warning of rocks, shoals, or other dangers upon the coast or at sea; and I do not mean to confine myself to any particular materials in the construction of the same, nor to the placing of the ring, levers, and springs above or below the centre of oscillation, but to vary the position of the same, and of the gongs and their number, as I may deem desirable, so long as I adhere substantially to the description.

No. 16,821.—GEORGE GILMAN, assignor to Himself and HENRY R. CLINKARD, Chelsea, Massachusetts.—*Second Anchor Shackle.*—Patent dated March 10, 1857.

The inventor says: I do not claim a hoisting block made with a pawl and tripping lever, so applied to the pawl as to enable a person to elevate the latter out of engagement with a chain when passing around the shear of the block.

But I *claim* my new improved anchor shackle, as made with a spring pawl D and trigger, or latching apparatus F F, &c., arranged with reference to the roller B, and made to operate substantially as described.

I also claim making the pawl forked, or with a recess C, so as to enable it to straddle the chain, as described.

No. 17,182.—JOHN B. HOLMES, of New York, N. Y., assignor to JOHN R. PRATT and JOHN B. HOLMES, aforesaid.—*Improvement in Anchor Trippers.*—Patent dated April 28, 1857.—The chain, and the anchor attached to it, is kept suspended when the pin D passes through the link G of said chain, as represented in the engraving. By turning handle F half a revolution to the right, the screw E upon shaft D will cause the pin D to recede and disengage itself freely and with perfect safety from the chain.

The inventor says: I do not claim the various parts, when separately considered.

But I *claim* the combination of the thread or screw E, working in a spiral groove or nut, with the shaft or bolt D, when arranged in the manner and for the purpose substantially as described, whereby I am enabled to relieve the chain and trip the anchor at an instant, in the manner set forth.

No. 16,356.—THOMAS L. DALTON, of New York, N. Y.—*Improvement in Anchors.*—Patent dated January 6, 1857.—The nature of this invention consists in the formation of an anchor having only one fluke D, with a curved guard B attached to shank A in such a manner that the action of the curved bar against the ground, when drawn forward, will turn the anchor to the right position for the fluke to take effect into the ground, and also in so forming the neck C as to bring the fluke into such a relative position to the shank A that when weighing anchor the fluke will not be likely to catch the side of the vessel.

Claim.—An anchor constructed substantially as described.

No. 18,044.—HENRY GETTY, of Brooklyn, N. Y —*Improvement in Ships' Berths.*—Patent dated August 25, 1857.—The berth A can be turned into a horizontal or vertical position, as represented in figs. 1 and 2, by turning it on pivot *e* as its fulcrum, and when occupied it will swing freely as the ship swings by pulling the cords *r r'*; the berth will be placed into the position fig. 2, one side touching the back of the room, whereby it is prevented from swinging.

Claim.—Providing at each end or side of a state room of a steamer or vessel a pivoted bracket *d*, which is capable of vibrating in the path of a circle a certain distance, and connecting the berth to said brackets through swinging vertical screw rods *g g*, metal or rubber springs *t t*, and hollow standards *b b*, substantially as and for the purposes described.

No. 16,656.—RUFUS RODE, of Manchester, Pa.—*Improvement in Boat Oars.*—Patent dated February 17, 1857.—Lever *a* is inserted in the hand end of the oar. The lever *a*, when depressed, operates lever B, which latter operates a spring C, so as to turn the oar to an angular position.

The inventor says: I *claim* the means by which I back water, when the oar is to be used for that purpose, the oar to return to its place, when feathering, by means of lever fulcrum and springs, as described.

No. 16,904.—ROBERT C. BUCHANAN, of Baltimore, Md.—*Portable Boats.*—Patent dated March 31, 1857.—The skeleton frame A of this boat, (a top view and longitudinal section of which is represented in the engraving,) can be folded up into a small compass to make it adaptable for transportation by land. When this boat is to be used, the sides and bottom of the frame A are covered with unprepared canvas, which is lashed to the lash-rails on the sides of the frame, as represented in the engraving.

Claim.—The portable boat, as described, the same consisting of the portable skeleton frame work and unprepared canvas, secured to the frame work by lashings, in manner set forth.

No. 18,694 —REUBEN JANE, of Otsego, N. Y.—*Improvement in Attaching Paddle Wheels to Canal Boats.*—Patent dated November 24, 1457.—The claim and engraving explain the nature of this invention.

Claim.—The vertical slotted shaft N, hung on a pivot on the bow of the boat, arranged in relation to the wheel shaft C, to which is attached the twisted paddles B and gear wheel E, for the purpose of drawing boats on canals, &c., and which are put in motion by the engine by means of gear wheel H^1, arranged as set forth.

No. 18,107.—ANDREW SEAMAN, of Amsterdam, N. Y.—*Improvement in Means for Attaching Whiffle-Trees to the Tow Lines of Canal Boats.*—Patent dated September 1, 1857.—In case it is necessary to detach the horse suddenly from the tow-line G, the attendant moves loop *c* forward and raises lever F to the position shown in dotted lines, when the bow of bar E will be turned in a horizontal position, and free from the end of tongue D.

Claim.—The shaft C, with tongue D attached, in combination with the bar E, with lever F attached, the above parts being fitted to the rods B B, and the whole arranged substantially as and for the purpose specified.

No. 18,683.—JOSEPH C. DAY, of Jersey City, N. J.—*Improvement in Means for Stopping and Starting Ferry-Boats.*—Patent dated November 24, 1857.—In this invention a set of timbers G G of any strong elastic wood is prepared; the length of each piece of timber being sufficient to reach from the outer end of the slip back two-thirds, or of its depth, to the bridge; the width a foot, more or less; and the thickness at one end a foot or thereabout, and at the other end six inches. Enough of these timbers should be strongly riveted together edgewise with bolts *f, f, f,* to give sufficient vertical breadth for receiving the gunwale of the boat in all the variations of the tide.

In order to complete the elasticity and power of resistance to any shock, air cylinders M M are located behind the free inner ends of the shields, as shown in fig. 2. These are firmly secured to the sides of the slip, and their pistons N N may be provided with friction rollers *b b*, like those in the pistons I I of the boat.

A self-acting grapple should be attached to the bridge B, and act upon a notched rack on the deck of the boat. The grapple is indicated at *i* and the catch rack at *h*, to show the manner in which they are to act.

The inventor says: I do not claim the use of a buffer for lessening the concussion produced by the collision of a boat with a wharf or other object, as I am aware of the previous employment of such a device.

But I *claim* the elastic shields G G constructed and applied to the slip, in the manner and for the purpose described.

I also claim the arrangement of the pistons or buffers I I, grapple *i*, and shields G G^1, operating together as specified.

No. 17,192.—ROBERT BOGLE, of Rock Hall, Md.—*Improvement in Boats for Duck Shooting.*—Patent dated May 5, 1857.—The gunner within the boat A, having his legs in the leggings D, propels the boat by his feet or by means of the paddles E towards the game, and when within shooting distance he can pass his body between the India rubber covers *a* and *c*, and shoot the game.

Claim.—In combination with the hull the openings therein, and leggings attached, so that the gunner may propel his boat, substantially in the manner described.

No. 17,052.—ZACHARIAH ORAM, of Camden, N. J.—*Improvement in Ice-breaking Boats.*—Patent dated April 14, 1857.—The nature of this invention will be understood by reference to the claim and engraving.

The inventor says: I do not claim to be the inventor of the various parts described.

But I *claim* the arrangement of a series of pointed plungers operating vertically and in line with each other, whereby I have the advantage of the series for line or continuous splitting off the ice, instead of breaking in mass.

I *claim* the combination of the shoving pole or rod C directly with the piston *a* of a portable or moveable steam cylinder, when the parts are arranged and employed in the manner and for the purposes substantially as described.

No. 18,095.—RICHARD C. HOLMES, of Cape May, N. J.—*Improvement in Surf and Life-Boats.*—Patent dated September 1, 1857.—The weight of the water tank E keeps the boat in an upright position, while the water which she would ship in case of accident can escape through valves F.

The inventor says: I do not claim, separately, the buoyant chambers, the valves, or the water tank.

But I *claim* constructing a boat of the peculiar form described, and giving to a boat of that form buoyant end D D^1, ballasting tank, and freeing valves, all constructed and operating substantially as described and for the purposes specified.

No. 16,774.—JOHN B. HOLMES, assignor to JOHN R. PRATT, of New York, N. Y.—*Improvement in Ships' Capstans.*—Patent dated March 3, 1857.—The spaces between the welps W being widest in the middle, the chain will be free to slide easily toward the middle of the barrel as fast as wound upon the same, thereby preventing one part of the chain from passing over the other.

Claim.—The vertical recesses C and welps, extending the whole length of the barrel of the capstan, and allowing of two or more turns of the cable around the capstan, as set forth.

No. 17,715.—ROBERT DUNBAR and JOHN F. ROBERTSON, of Buffalo, N. Y., assignors to "THE BUFFALO EAGLE IRON WORKS COMPANY," of Buffalo aforesaid.—*Improvement in Ships' Capstans.*—Patent dated June 30, 1857.—If the pawls *e* are down upon the ratchet teeth *c*, on the upper end of the body C, and the pinion I is thrown out of gear with the stationary wheel A^1, on plate A, the cap D and body C will be connected, and both turn with each other; but if the pawls *e* be varied, and the pinion I thrown in gear with the wheel A^1, it will be seen that the cap D is connected with the body C, through the medium of the gearing *p*, J, I, A^1; and in the latter case the speed of the body C will be much slower than in the former case, when the cap was directly connected with the case.

The inventors say: We do not claim giving a variable movement to the capstan, irrespective of the particular means employed for effecting the purpose, for capstans have been so arranged as to have a variable movement.

But we *claim* the arrangement of the cam *j* and eccentric *h* upon the shaft G, operated by the lever *i*, for throwing in and out of gear the pinions J and I, as set forth.

No. 17,971.—DAVID KNOWLTON, of Camden, Me.—*Improvement in Ships' Capstans.*—Patent dated August 11, 1857.—When this capstan is to be used as a power capstan, the pawl *n* is lifted by its head *p* from contact with the top of the barrel, and the head C is rotated by

means of handspikes. As the head turns, pinion G turns pinions H and I in opposite directions, thereby operating pinions *u* and *v*. The pinions *u* and *v* have a tendency to turn the internal gear K, but that is prevented from turning, as pawl *n* bears against the teeth of ratchet M; and the consequence is, that the gears *u* and *v* themselves revolve around shaft B, and carry the barrel around in the same direction in which the power is applied to head C. By tripping pawl *p* into one of the notches on the top of the capstan barrel, the head and barrel turn together with the same speed, and the effect of the operation is the same as with the common capstan.

The inventor says: I do not claim making a power capstan to operate by means of a combination of gears, ratchets and pawls.

But I *claim*, in my improved capstan, the combination of the gear K, at the bottom of the capstan (when made and applied so as to be rotated or be made fast alternately, as described) with the gear or pinion G attached to and revolving with the capstan head C, they being connected by gears, and operating in the manner and for the purpose described.

No. 17,969.—Samuel Huse, of New York, N. Y.—*Improvement in Ships' Capstans.*—Patent dated August 11, 1857.—The bars L can be raised or lowered by means of handle *m*. When they are raised, they connect the head *a* with the barrel B, so that they turn together, and a rapid motion may be given to them, the plate G turning as rapidly as D and E. By turning handle *m* and lowering the bars L, the drum head *a* turns independently of the barrel B, carrying with it the cylinder D and cog-wheel E, the latter meshing into cog-wheel H on the under side of plate G, moves plate G, and with it barrel B; plate G and barrel B being coupled together by bars L, and the wheel H, in turn, meshes into I, thus a slower motion is given to B than to *a*, thereby increasing the power of B in proportion of the radius of E and I.

The inventor says: I am aware that capstans have been arranged to give a more rapid motion, or one with increased power, by connecting or disconnecting the drum and barrel, and at the same time throwing into play or out of play internal gearing, or by changing the direction of motion of the drum and barrel, and therefore do not claim generally the construction of a capstan to accomplish these ends.

But I *claim* the arrangement and use of the hollow shaft D attached at one end to the drum or head, and in combination therewith the movable gear-plate G, constructed substantially as described, and worked by a pinion on the lower end of D.

Also, in combination with such hollow shaft and movable gear-plate, the arrangement of the clutch levers, or an equivalent thereof, for the purpose of connecting such movable gear-plate to the barrel, and at the same time disconnecting the head and barrel, or *vice versa*, and thus changing the action of the capstan to a quicker or more powerful one in a moment, and without changing its motion or displacing any gear.

No. 18,053.—CHARLES E. MARWICK, of Portland, Me.—*Improvement in Ships' Capstans.*—Patent dated August 25, 1857.—When the capstan bar *m* is inserted within one of the holes *e* of the key ring D, and so that its bitt *l* may be forced through the bitt recess *f* of the said hole, and into one of the recesses *d* of the lip C, the ring D will be locked to the capstan barrel A so as to enable the same to be put in rotation. If it should be desirable to augment the power for rotating the barrel, each capstan bar is inserted in its hole in such a manner that the bitt *l* may pass into recess *g*, and the end of the bar into one of the sockets *h;* by this the key ring D will be locked to the head E ; and as both are turned, the shaft F will be rotated, and the rotary motion of the capstan barrel will be effected by means of the gearing G, H, I, K, M, N.

The inventor says : I do not claim a capstan having its barrel fitted to rotate either with or independently of a handspike or wheel, as this is not new.

Neither do I claim the application of gearing to a capstan, for the purpose of increasing the power by which the same may be put in operation.

But I *claim* the combination of the key ring D, the recessed lip C, and the socketed head E, as constructed, arranged together, and applied to the capstan barrel A and the driving shaft F, of the multiplying gearing, and operated by means substantially as specified.

No. 16,935.—JOHN SCHAFFER, of West Manchester, Pa.—*Improvement in Steamboat Capstans.*—Patent dated March 31, 1857.—The head H is secured permanently to shaft C; the drum E can be connected with shaft C by inserting pin K into the holes L and M. The drum D can be made to run with shaft C, by unshipping the wheel P, and fastening the drum E to the drum D by inserting a pin in the square socket N, one half of which is in the drum E and the other half in the drum D.

The inventor says : I do not claim the parts driving or driven, as separately considered.

Nor do I claim a capstan with a barrel divided into two or more drums rotated upon a stationary shaft.

I *claim* a capstan the shaft C of which rotates within the drums D and E, which can be rotated separately or in conjunction with and by, or independently of, said shaft, substantially in the manner and for the purposes described.

No. 18,260.—GEORGE WILLIAMSON, of Brooklyn, N. Y.—*Improvement in Diving Apparatus.*—Patent dated September 22, 1857.—By this invention, when the nautilus is suspended to the float K, the pull of the rope on the capstan *o* will tend to turn it with a force due to the sinking power of the nautilus, and the capstan is connected with the index-wheel *v* by the catch on the handle, and the index-arm *x* to the spring *y*, the pull on the rope due to the sinking force will be exerted on the spring which alone prevents the capstan from turning, and hence the index-hand *x* will indicate the weight actually suspended to the float; and if that be greater than the weight of an operative, he may get out of the nautilus without danger of its rising.

The inventor says: I do not wish to be understood as limiting my claim of invention to the special construction specified, as my invention of improvements may be applied by the substitution of equivalent means.

I *claim* the employment, in combination with the nautilus, of the channel-ways for the escape, at the sides, of the compressed air from the working chamber, substantially as described the said channel-ways being made in the thickness at the bottom of the nautilus—that is, between the floor of the working chamber and the outer bottom surface of the nautilus, as set forth and for the purpose specified.

I also claim combining the nautilus with, and suspending it to, a float or buoy, in the manner substantially as described, so that the apparatus for operating the connecting rope, or equivalent, may be worked from the inside of the nautilus, as described, and for the purpose specified.

And I also claim combining a spring balance or scale with the combined nautilus and float, substantially as specified and for the purpose set forth.

No. 18,458.—James O. Kelly, of Sag Harbor, N. Y.—*Improvement in Harpoons.*—Patent dated October 20, 1857.—When the harpoon is ready for use, it is in the position represented in the engravings 1 and 2. When driven into the body of the whale, the flukes *c c* prevent the instrument from being drawn back, and the motion of the whale, in attempting to escape, causes the line to be straightened and the pin *d* to be broken, and then forces the point B forward into the flesh until the eye E reaches the slide G. The barbs *b b* being thus gradually turned in, the flesh cannot return in the cut made by their insertion, and consequently take a strong hold in the flesh of the whale.

By using the connecting rod *i*, the sliding socket C and the slide G are enabled to slide over any bends in the rod *a*, which are frequently caused by the turning or other violent motions of the whale.

The inventor says: I *claim* the arrangement of the eye, or point of attachment, of the line D to the harpoon, and the eye in the slide G through which the line passes at different angles on the harpoon when prepared for throwing, substantially as described, whereby a twisting movement is given to the point of the harpoon in the act of being thrust further into the whale, for the purpose set forth.

I also claim the connecting rod *i* and guide G, in connexion with the sliding socket C, whereby the advantages of a long socket or bearing are attained without the disadvantage of a continuous tube, in case of bending the rod or shaft which slides therein, substantially as specified.

No. 16,555.—Warren A. Simonds, of Boston, Mass.—*Improvement in Life-Preservers.*—Patent dated February 3, 1857.

Claim.—A life-preserving float, composed of separate and independent sectional chambers or air vessels E, covered and surrounded upon all sides by exterior sectional floats *g* filled with cork or other solid buoyant material, arranged in the manner substantially as set forth.

No. 17,434.—JAMES KNIGHT, of New York, Y. Y.—*Improvement in Life-Preservers.*—Patent dated June 2, 1857.—The nature of this invention will be understood by reference to the claim and engravings.

Claim.—The construction of the supporter, to sustain the head in the position assumed by persons when swimming, thus relieving the wearer from muscular effort, and, attached to this supporter, a shield, to protect the mouth and nostrils from the violence of the waves, and this supporter and shield fitted to the ordinary life-preservers as worn around the body, by having attached to them sheaths, as represented, one of them fitted with a sheath to admit the stem of the supporter for adjustment to the wearer. The whole, when combined, constitutes my improvement.

No. 18,274.—CHARLES J. BUNKER, of New York, N. Y.—*Improvement in Life-Preservers.*—Patent dated September 29, 1857.—The form given to this improvement is that of a sack or shirt, which can be worn either as an outside or inside garment. The drawings represent a life-preserving shirt. Figures 1 and 2 of the drawings represent the outer and inner sheets of the fabric of which the life-preserver is made, and the cells of each. When these are placed together, the air cells of one occupy the spaces in the other not taken up by its air cells. The edges, marked 1 and 2, respectively, join each other. When intended for outside wear, this preserver can be made of India rubber cloth, or the like. Instead of being closed at the sides, under the arms, it may be open at the sides, fixed with straps and buckles, so as to be thrown over the head and secured to the person.

The inventor says: What I *claim* as new is a life-preserver constructed of two or more sheets of water-proof fabric, with the series of air cells arranged substantially as set forth, and so as to cover the vital parts of the body, for the uses and purposes set forth and described.

No. 18,809.—ABRAM J. GIBSON, of Worcester, Mass.—*Improvement in Life-Preservers.*—Patent dated December 8, 1857.—This invention consists of a deep belt constructed of some water-proof air-tight material, constructed with air chambers, and having combined with it hollow floats, of similar material, which are of sufficient length to reach along a person's extended arm, and which terminate in hollow paddles, made to fit the hands, for the purpose of aiding the wearer in swimming.

The inventor says: I do not claim the belt, nor do I claim the construction of an inflated life-preserver with separate air chambers; neither do I claim of itself the use of buoyant paddles, fitted and attached to the hands as an aid in swimming.

But I *claim* a life-preserver, composed of a belt A, arm-floats B B, and buoyant paddles C C, arranged and connected and furnished with straps, or their equivalents, to attach it to the person, substantially as described.

No. 18,869.—JAMES E. SERRELL and WILLIAM DAVIS, of New York, N. Y.—*Improvement in Life-Preservers.*—Patent dated December 15,

1857.—The inventors, in describing their improvement, say: We provide two pockets *f f* in the front of the jacket, and pockets *g g*, one under each arm, and also pockets *h h* on the back, similar to pockets *f f*. Into each of these pockets we insert a float of proper size and shape, made in the following manner: We take a bladder, or equivalent water-proof substance, and fill the same with shavings, and insert the same into the pockets, and sew the same into place.

Claim.—The manner described of forming floats for the pockets of life-preserving jackets, by filling bladders with shavings, or equivalent material, as and for the purposes specified.

No. 18,090.—ELBRIDGE FOSTER, of Hartford, Conn.—*Improvement in Life-Preserving Berths for Steam and other Vessels.*—Patent dated September 1, 1857.—When the berth A is used as a common bed, the valves *c* are opened for the escape of air. By turning the keels E to the position represented in fig. 1, the spaces E are filled with air, and the stops D are then turned, closing the openings *c* air-tight, thus imparting a high degree of buoyancy to the berth.

Claim.—The adjustable inflated keels, in the manner and for the purpose set forth.

No. 16,589.—LEWIS T. HOWARD, of Smith Mills, Mass.—*Improvement in Feathering Paddle-Wheels.*—Patent dated February 10, 1857.—It will be understood from the engravings that this improvement serves to keep the paddles *i* constantly vertical.

Claim.—Connecting the cranks of the paddle-shafts with each other around and with the stationary governing wheel E, by means of the connecting bars K K and the grooved rollers *l l*, or their equivalents, substantially as set forth.

No. 18,202.—LEWIS T. HOWARD, of Smith's Mills, Mass.—*Improvement in Feathering Paddle-Wheels.*—Patent dated September 15, 1857.—The nature of this invention will be understood by reference to the claim and engravings.

Claim.—Contracting the hub *h* of the paddle-wheel D, so as to dispense with an outside bearing, for the purpose of enabling me to place the feathering wheel *k l* outside of the paddle-wheel, and use any length of connecting arms *o*, between said feathering wheel and the buckets *i*, that may be deemed most effective, and as set forth and explained.

No. 17,943.—GEORGE W. SWARTZ, of Buffalo, N. Y.—*Improved Propeller-Blade.*—Patent dated August 4, 1857.—These propeller-blades, on their periphery, when revolving, describe the surface of a half globe, whatever may be the diameter of the wheel or the pitch of the blades; the blades are convex on their outer sides, and their inner surfaces are made slightly cylindrical.

Claim.—A propeller-blade constructed in such a manner as to embody said principles, substantially as set forth.

No. 17,276.—George Hibsch, of Buffalo, N. Y.—*Improvement in Propeller-Blades.*—Patent dated May 12, 1857.—This invention relates to the peculiar shape of the blades of a propeller-wheel, which shape is represented in the engravings.

Claim.—Constructing propeller-wheels having blades formed substantially as described and for the purposes set forth.

No. 17,017.—Jonas Bosenbury, of Cherryville, N. J.—*Improved Boring Machine.*—Patent dated April 14, 1857.—The object to be bored is clamped between the dogs H and F; the dogs H are adjustable by means of the set screws S, and the dog F, which is attached to rack *c*, can be adjusted by turning spiral cam D by means of crank E. The auger shaft *n*, which turns in a frame *d b*, can be adjusted in a lateral direction by means of slide *g*, which can be moved on frame *a* by means of a tongue and groove joint, while it can be adjusted in a vertical direction by frame *b d* sliding on frame *c*. The uprights I can be adjusted laterally by turning cranks L.

Claim.—The arrangement of devices, as described, for the purposes set forth.

No. 18,814.—Almer Johnson, of Buffalo, New York.—*Improvement in Propellers.*—Patent dated December 8, 1857.—The line L, in the engravings, indicates the division between the stern and the fan. The arrow indicates the entering edge of the propeller. The arrow 2 indicates the direction in which the wheel revolves. The lines 1, 2, 3, &c., show the direction which the curves take on each surface of the stern.

The line M indicates the circumferential line of the fan which falls outside of the stern.

Claim.—Constructing propellers, which embody the distinctive features of my invention, substantially as set forth.

No. 18,314.—Ethan Campbell, of Boston, Massachusetts, assignor to William P. Page, of Cambridge, Massachusetts, and Edward F. Hodges, of Boston Massachusetts, (in trust.)—*Improved Marine Propelling Apparatus.*—Patent dated September 29, 1857.—In the drawings, A represents a cylindrical case or vessel provided with two curved induction pipes, or passages, B and C, leading out of its lower part, and arranged, with respect to one another and the case, as shown in fig. 1. Through the axis of the said cylindrical case a shaft D extends and turns freely in the ends of the case. The said shaft has two circular heads E fixed upon it eccentrically, as shown in figs. 1 and 2, each of these heads being placed, as shown in fig. 2, in contact, or nearly so, with the adjacent head of the case A. A tubular cylinder F turns freely on the two heads E, it being arranged thereon as exhibited in figures 1 and 2. This cylinder has a wing or rectangular division plate G extended downward from it, and directly between the two passages B and C, such wing being constructed in its length to correspond to the distance between the heads of the case. This wing G is firmly attached to the cylinder F, and, when the apparatus is in operation, plays freely through a space arranged between the

conducting passages B and C, as shown in fig. 1, the side of such space being so formed as to be in contact with those of wing G, in whatever position such wing may be.

When the shaft D is in motion, it will cause the two eccentric heads E to revolve with it and within the case A, such a movement of the heads, operating in connexion with the space and the wing G, serving to create in the tubular cylinder E a peculiar movement within the said case, by which the cylinder will be carried around against the entire surface of the case.

The inventor says: Now, I do not claim an eccentric cylinder and a wing and valve, arranged so as to rotate together in a cylindrical case, the wing, during such rotation, being made to slide in a recess formed in the eccentric cylinder.

Nor do I claim the principle of propelling a vessel by an apparatus for forcing jets of water against the water in which the vessel may be floating.

But I *claim* my improved propelling apparatus, constructed and operating so that its wing cylinder F and wing plate G may not only simultaneously rise and fall in their case A, but at the same time have lateral motions in contrary directions, and the wing operate against a space *b*, so formed in and applied to the case as not only to be in contact, or nearly so, with the opposite sides of the wing, but allow the vibratory, as well as the up and down movement of the wing, as specified.

No. 17,156.—Thomas Kendall, sr., of San Francisco, Cal.—*Improvement in Submerged Propelling Wheels.*—Patent dated April 28, 1857.—When the wheel is in motion, the cam plates P, turning on their pivots T, pass from the inner circumference of ring *a* over the curved plates *z;* and by these transitions, the positions of the wings P are changed alternately, and each wing at proper intervals falls centreward, so as to encounter the resistance of the water outward and backward from the spaces between the arms, as the wing changes its position to enter the nich in its segmental form.

Claim.—The means described for feathering or changing the positions of the wings, consisting of the cam plates P, concentric ring *a a*, and curved plate Z Z, with its slopes or planes; the whole being arranged and operating substantially in the manner described.

No. 16,352.—A. B. Crossman, of Huntington, N. Y.—*Improvement in Rudders.*—Patent dated January 6, 1857.—The lower part of rudder A is provided with an extra extension piece B, which is attached to the cheek plates C; the piece B extending forward under the keel of the vessel and beyond the pintles of the rudder, and thus render the rudder self-balancing. The extension B can be raised on entering shoals, as represented in dotted lines.

The inventor says: I disclaim the making of a rudder in two parts, one of which is movable, for devices of this kind have long been known; an example is seen in "Newton's London Journal," conjoined series, vol. 26, page 158, plate 9, figs. 7 and 8. In this device the main rudder is provided with a movable attachment on its rear,

so arranged that when the rudder strikes a rock or shoal, the movable piece will rise and prevent injury either to the vessel or rudder. Another example is seen in a French work, published by the French government, at Paris, in 1824, entitled "Memoirs of American Steam Vessels, by M. M. Morriestier." This consists of a movable piece attached to the rear of the rudder, and so arranged that it can be raised and lowered, so as to extend at pleasure the length of rudder surface presented to the water, and thus cause the water to obey the helm quicker. In smooth water, this device is perhaps advantageous, but it is evident that the power required for steering will be much iu-increased by widening the rudder surface. This device, therefore, augments the very evil which mine is intended to obviate.

I *claim* the attachment to the rudder A of an extension piece B, when the said extension piece is so combined and employed as to render the rudder wholly or partially self-balanced, as set forth.

No. 17,572.—Robert S. Harris, of Galena, Ill.—*Improvement in Rudders.*—Patent dated June 16, 1857.—The nature of this invention will be understood by reference to the claim and engravings.

Claim.—The application of an outer or second rudder attached to and working on the common rudder.

Also, the short tiller held and worked by stationary chains or ropes, as above described, for the purpose named.

No. 16,969.—Washington F. Davis, of Winthrop, Mass.—*Improvement in Reefing Sails.*—Patent dated April 7, 1857.—In order to reef this sail from the deck, the rope I should be set free, so as to allow the upper yard to be drawn downward. The rope H is then to be pulled on, and while it draws the upper yard B down to the reef band E, the latter will be held up by the reefing ropes, and the sail folded in plaits against the yard B. Thus the sail will not only be reefed, but at the same time it will be folded up by one set of lines.

The inventor says: I do not claim reefing at either the head or foot of a sail or topsail; nor do I claim reefing at the foot of a topsail, by means of a series of buntlines fastened to the reef band, and extended downward through grummets or guides, thence underneath the foot of the sail, and thence upward on the front of the sail, and to and through blocks or sheaves applied to the topmast, the said buntlines extending from thence to the vessel's deck, for such is an old contrivance. Nor do I claim the plans or methods of reefing as recently patented by William H. Foster and Isaac Boss, the topsail in them being reefed at its head, while all that part of the sail which is below the reef band is held up by lines of suspension passing upward through blocks or sheaves, directly supported by the topmast, the said suspension lines descending from thence to the deck. In these plans the upper yard is lowered down, so as to reef the sail, the draught, however, on the reefing lines, operates to a considerable extent to prevent the descent of the yard.

I am also aware that reef tackles have been run along the yard toward the mast, and thence down through the yard toward the deck; consequently I do not claim such; the reef tackles in such cases being

used separately from the reefing lines, and for the purpose of drawing close up to the yard the outer edges of the sail after it has been reefed.

I *claim* arranging the ranges of folding eyes or grummets, and the reefing lines above the reef band, or with respect to the upper yard, as described, in order that the sail, when reefed, shall at the same time be folded or plaited against the upper yard, as specified.

I also claim the described arrangement of the lines of grummets or eyes, at unequal distances apart, in the manner as set forth, in order that the minor part of each fold of the sail may come underneath the yard, or the yard project beyond it, as described, when the sail is reefed.

No. 17,101.—FRANCIS C. LA CROIX and CHAUNCEY BARNES, of New York, N. Y.—*Improvement in Reefing Sails.*—Patent dated April 21, 1857.—If the topsail yard be lowered to the usual distance for a close reef, the act of lowering will take up the lines *b* and *f*, they being fastened at b^{11} and *o;* and the part of the sail below the close reef points will be kept as tightly stretched as if the yard were not in motion.

Claim.—Reducing sails by means of "tackles," arranged as described, both ends of the "falls" of which are secured to the yard, and which are operated in the manner set forth.

No. 18,219.—GEORGE W. LA BAW, of Jersey City, N. J., assignor to Himself and CHARLES A. DURGIN, of New York, N. Y.—*Arrangement of Means for Reefing and Furling Sails.*—Patent dated September 15, 1857.—By rotating shaft G, the vertical shaft D is also rotated; and by depressing lever J, the projections *g* can be moved into the notches of rollers E, and said rollers can be coupled with shaft D, when the sails can be wound up on said rollers.

The inventor says: I do not limit myself to any particular mechanism for operating the vertical rollers around which the sails wind, as such mechanism may be varied.

I *claim* the arrangement of vertical rollers in front or rear of the mast, and operated by mechanism from the deck of the vessel, and whereby I am enabled to operate separately or together the sails on each mast from the deck, substantially as described and set forth, irrespective of the mechanism employed for working the vertical rollers.

No. 17,616.—THOMAS BATTY, of Brooklyn, N. Y.—*Improvement in Means for Reducing Topsails.*—Patent dated June 23, 1857.—In reducing the sail, the yard D is lowered to the position represented in fig. 1, and then all the reef pennants are hauled tight to draw the edges of the sail close up to the yard, which causes the bunt of the sail to be plaited between the front of the yard and the still extended portion of the sail, as represented in fig. 2. As the yard D is lowered, the bunt of the sail is prevented from filling with wind by the position of the bunt pennants H, which are confined near the yard by the crane-neck piece I.

Claim.—1st. The arrangement of one or more bunt pennants H,

connected with the front of the sail, passing up the front thereof, and connected with the yard; and of a crane-neck piece I, or its equivalent, attached to the yard to work up and down said pennant or pennants, substantially as set forth, so that in lowering the yard the wind may be expelled from the bunt of the sail towards the sides, in the manner substantially as represented in fig. 2.

2d. The arrangement of the flat blocks *c c*, through which the reef pennants run on the top of the yard, substantially as and for the purpose set forth.

No. 17,365.—JAMES E. COLE, of New York, N. Y.—*Improvement in Means for Reefing Topsails.*—Patent dated May 26, 1857.—The sail A can be reduced by operating the supplementary shaft *e* from the deck of the vessel by windlass *h* and chain *g* passing over pulley *k*. The shaft *e*, as it is rotated, transmits motion to the roller spar *c*, whereby the sail is rolled up on said spar.

Claim.—The supplementary shaft, in combination with the roller-spar, for the purposes and in the manner substantially as set forth.

No. 17,977.—JAMES W. NORCROSS, of Boston, Mass.—*Improvement in Reefing Topsails.*—Patent dated August 11, 1857.—The nature of this invention will be understood by reference to the claim and engravings.

The inventor says: I do not claim carrying the reef-tackles from the reef-band upward through blocks placed at or under cross-trees, and from thence down to the deck, whereby all that part of the sail which is below the reef-band is suspended or drawn tightly up while the yard is being lowered down to or towards the reef-band.

Nor do I claim reducing sails by means of an arrangement of reef-tackles, wherein each reef is fastened at one end of it to the topsail yard, is thence led down through a leading-block fastened to the reef-band of the sail, thence carried upward to and through the yard, and around a sheave placed thereon, and thence carried toward the mast, and through a leading-block affixed to the topsail yard near to the middle thereof, thence upward from the said leading-block to and through a leading-block affixed to the cross-tree, thence downward therefrom and fastened to the topsail yard.

But I *claim* my arrangement of reef-tackles described, the same consisting in fastening the said reef-tackles to the sail at or near the reef-band, thence leading them upward through sheaves, or blocks *c*, or their equivalents, applied to the topsail yard C, and from thence extending the said reef-bands upward and through blocks *d*, suspended to the cross-trees E, or that part of the topmast just below them, and thence leading the reef-tackles downward and fastening them to the topsail yard at or near its middle, substantially as described.

No. 18,085 —THOMAS J. CHUBB, of New York, N. Y.—*Improved Ore-Separator.*—Patent dated September 1, 1857.—The material having been properly screened to the desired size is fed into the hopper Q, and received on the upper part of the inclined perforated table A.

The action of the bellows L, whose top plate J rises and falls at a rapid speed, causes the material to rise and fall at the same rate, rising always in a line perpendicular to the face of plate A, but falling vertically under the influence of gravitation, and consequently passing from the higher to the lower end of the inclined bed A. By this operation the heavier particles find their way in the channels *c*, towards the main channel D, while the lighter particles pass off through channels F into side channels G.

The inventor says: I do not claim the separation of substances of different specific gravity, by submitting them to the action of a blast of air through a screen.

But I *claim*, first, the employment, in combination with an inclined perforated table or bed, and a bellows, operating as specified, of a number of channels applied and arranged, substantially as described, relatively to the bed and to each other, to convey away the separated substances in different directions, as set forth.

Second. The division of a bellows, applied and operating in connexion with a perforated bed, for the separation of articles of different specific gravity into numerous chambers or compartments, each having its separate valve or valves, and constituting in itself a complete bellows, for the purpose specified.

No. 16,995.—WILLIAM RANDLE, of Florida, N. Y.—*Improvement in Strings for Musical Instruments.*—Patent dated April 7, 1857.—The nature of this invention will be understood by reference to the claim and engraving.

Claim.—The application of one or more springs applied to each string, as described, or its equivalent, and for the purpose set forth.

No. 16,707.—JOHN ALLENDER, of New London, Conn.—*Improvement for Sustaining Friction-Rollers in Ships' Blocks.*—Patent dated March 3, 1857.—The pieces F F are made of sheet metal and bent into the proper shape, as represented in figure 3. These pieces yield and spring so as to compensate for any difference there may be in the size of the rollers C.

Claim.—The pieces F F placed between the rollers, in combination with the flanges, or their equivalents, to hold the rollers in position endwise, substantially as described, and permit them to revolve, thereby dispensing with the pivots and rings heretofore used for that purpose.

No. 17,940.—CHARLES PERLEY, of New York, N. Y.—*Improvement in Compound-Capstans for Ships.*—Patent dated August 4, 1857.—The nature of this invention will be understood by reference to the claim and engravings.

The inventor says: I do not claim a capstan, windlass and wench combined; neither do I claim a horizontal heaver in itself.

But I *claim* the combination of the adjustable bearing block *o*, with the heaver or windlass *m*, so constructed as to receive the strain and weight of chain cable, and relieve the shaft *l* therefrom, leaving said shaft *l*, when disconnected from said heaver or windlass, free to rotate, and be used for other purposes without loss of power by the friction

of said heaver or windlass, even when the vessel is riding at anchor by said heaver, substantially as and for the purposes specified.

I also claim the power capstan *n* and its coupling *q*, fitted to slide endways of the shaft *l*, combined with the heaver or windlass *m* and bearing block O, whereby the said power capstan *n* connects the shaft *l* and heaver *m*, or is itself free for use as a power capstan or bit, when connected to, or disconnected from, said heaver or windlass *m*, substantially as and for the purposes specified.

No. 17,228.—ROBERT R. OSGOOD, of Troy, N. Y., assignor to JASON C. OSGOOD, of the same place.—*Improvement in Ships' Hawse-Holes.*—Patent dated May 5, 1857.—The nature of this invention consists in hanging the pulley D on a rotating bed-plate A, and connecting therewith a tubular guide F, through which the rope or chain passes on or off the pulley, and which, in yielding to the direction of the rope, causes the bed-plate to rotate in such a manner that the axis of the pulley shall at all times be at right angles to the direction of the rope, to prevent it chafing on the edge of the pulley.

Claim.—Supporting a pulley on a rotating bed, and combining therewith a guide tube hinged on its axis for the rope to pass through, substantially as and for the purposes set forth.

No. 16,845.—CALVIN KLINE, of New York, N. Y.—*Mode of Compensating the Local Attraction of the Magnetic Needle on Ship.*—Patent dated March 17, 1857.—This invention consists in surrounding the compass needle with an insulated shield or steel, which the inventor says he has found to protect the needle against all attractions, while it is left to travel freely by the natural magnetism of the earth; and it is found that, with his device, the compass traverses as freely and settles as quickly as the ordinary compass where no local attraction is present.

Claim.—The surrounding metallic ring or rings *r*, or the modifications thereof, constructed, combined and arranged with the needle of a compass, substantially in the manner and for the purpose set forth.

No. 18,192.—ABRAHAM COATES, of New York, N. Y., and SAMUEL M. PERRY, of Brooklyn, N. Y.—*Improvement in Ships' Pumps.*—Patent dated September 15, 1857.—When, by the motion of the vessel, the shaft H and weight I swing on shaft K as fulcrum, the wheel G is turned, transmitting said motion to wheel F, shaft A, crank C, and pump rod E; or when the shaft H and weight I oscillate on shaft A as fulcrum, pump D is operated by the connexion of piston rod E with said shaft.

Claim.—The peculiar mechanism by which we obtain reciprocating motion between the pump and piston from each move of a lever having a combined horizontal and longitudinal motion, the same consisting of the shaft, the cross through which it passes, the universally moving lever attached by journals to the cross at right angles to the shaft, and the two bevel gears or section of gears—the one attached to the lever, the other to the shaft—or any other arrangement substantially the same and for the purpose specified.

No. 17,780.—JAMES E. COLE, of Brooklyn, N. Y.—*Improvement in Rigging of Ships.*—Patent dated July 14, 1857.—The object of this invention is to prevent a twisting, wringing strain upon the mast when the yards C D are moved from side to side of the line of the keel.

Claim.—Placing the centres of motion of the yards of a square-rigged vessel in line with each other, in the manner and for the purposes set forth.

No. 17,031.—JAMES EMERSON, of Worcester, Mass.—*Improvement in Reefing Ships' Sails.*—Patent dated April 14, 1857.—To reef the sail one man goes aloft and unscrews the clamps D, then, by hauling the endless chain Y, which passes over pulley L down by the mast on deck, rollers R and pinions *f* and *c* are turned, and the roller O will roll the sail up as past as the yard is lowered by the halyards; the sail being spread by the rope passing through claws X, which are operated by right and left screws E. When the sail is to be unrolled, the pawls P are lifted out of the ratchets I, and the halyard is hoisted.

Claim.—The adjustable clamps D, when arranged so as to be enlarged or decreased, as required.

Secondly, I claim the screws E and claws X on the roller O, for spreading the sail.

No. 16,773.—JOHN B. HOLMES, assignor to JOHN R. PRATT, of New York, N. Y.—*Improvement in Ships' Steering Apparatus.*—Patent dated March 3, 1857.—The inventor says: I do not claim the manner of moving the rudder by means of a rack and pinion operated by gearing.

I *claim*, first, the arrangement of a pinion P on the end of the tiller B, working into a stationary curved rack R, attached to the deck of the vessel in connexion with a friction roller H, working against a smooth stationary surface G, to prevent the rudder from being pressed out of its place, in the manner substantially as described.

Secondly. I claim the arrangement of attaching the pinion to the end of the tiller, in connexion with a lever L, in such a manner as to be able to move said pinion further into a stationary rack by the action of said lever for the purpose of producing a friction sufficient to hold the rudder thereby in any desired position, at the same time to lock the gearing to prevent any back lash on the steering wheel.

No. 17,002.—SAMUEL N. SMITH, of New York, N. Y.—*Improvement in Ships' Steering Apparatus.*—Patent dated April 7, 1857.—By turning wheel E, the tiller C will be operated either to the right or left, according to the direction in which the wheel E is turned in consequence of pinion F gearing into rack G, and the tiller C may be secured at any desired point by turning screw *d* of brake I.

The inventor says: I do not claim to be the first inventor of brakes for stopping the steering wheel, and holding it inany desired position; an example is seen in the rejected application of E. G. Otis, where the wheel is held by a strap, which is connected with the deck of the vessel.

I *claim* locating both of the bearings *a* of the wheel shaft D upon the tiller C.

I also claim locating the brake I *b* upon the tiller and wheel shaft C D, all as described.

No. 17,525.—PHINEHAS SMITH, of Patchogue, N. Y.—*Improvement in Steering Apparatus for Ships.*—Patent dated June 9, 1857.—The nature of this invention will be understood by reference to the claim and engravings.

The inventor says: I do not claim the individual parts of the described apparatus.

But I *claim* the arrangement of the movable cogs *d d*, plate *c*, pinion *e*, and ropes, as set forth and shown in the drawings for operating the tiller by the steering wheel A.

No. 17,975.—GIDEON B. MASSEY, of Mobile, Ala.—*Improvement in Instruments for Indicating the Depth of Water in Ships.*—Patent dated August 11, 1857.—When the float which is attached to the chain G is at the bottom of the vessel, the spring F is wound up like a clock spring and kept in that condition by the weight of said float; but as the float rises by reason of the increase of water in the hold of the vessel, the spring F unwinds itself and turns the barrel E upon arbor *a* and winds up the chain G, and the wheel J is rotated with the barrel, and the pins *i* are caused to act upon the arms $c\ c^1$ of the hammers I I^1, which thus strike upon the bell D.

Claim.—The arrangement of the parts cited relatively to one another for united operation to produce a leakage alarm and register for ships, to wit: the bell D arranged on a firm part of the vessel B, the spring F within the barrel E, and the barrel within the bell, the float chain G on the spring barrel E, the hammers I I^1 within the bell, the pin wheel J, and the mechanism by which they are operated and controlled on the arbor of the spring barrel, and the mechanism which measures the rise and fall of water alongside the signal mechanism, and so as to be actuated by the spring which sounds the alarm, substantially as and for the purposes set forth.

No. 16,885.—NORMAN SMITH, of Stonington, Conn.—*Improvement in operating Ships' Windlass.*—Patent dated March 24, 1857.—A represents the upper deck of a vessel; B the topgallant forecastle; C the windlass, such as is commonly used; D one of the windlass bits; E is a double acting crank, connected to the extremity of the axis of the capstan F. This crank has a steadying journal *g*, corresponding with the axis of the capstan, acting in a box or supporting timber H. This crank is connected to the axis of the capstan, which is made square at the end to fit in a corresponding eye in the central axis of the crank, and this is secured in its place on this axis of the capstan by a pin or bolt *a* in such a manner that, by removing this pin, the crank may be disengaged therefrom by dropping downwards, the journal *g* pressing down into the step. L L are two levers, connected by a bolt *b*, as a fulcrum to the supporting beam H. On these levers are attached

the pawls P P, which act in the ratchets R R; these ratchets being on the same axis, only one is seen in the engraving.

The inventors say: I do not claim the use of a ratchet to operate a windlass.

But I *claim* operating the windlass for raising anchors, and for other purposes on shipboard, by means of a crank or eccentric on the axis of a capstan F, or other upright shaft, through the medium of pawls P attached to levers L, and working in ratchets R on the windlass beam, substantially as described.

No. 17,633.—JOSEPH PEEVY and ABRAHAM SANBORN, of Bangor, Me.—*Improvement in Ships' Windlasses.*—Patent dated June 23, 1857.—By turning the right and left handed screws *b* and b^1 the fuclra of the pawls P and P^1 are adjusted simultaneously above and below the fulcrum F, of lever L, so as to adjust the rotation of the windlass W.

The inventor says: We disclaim the mere placing of the pawls above and below the fulcrum of the lever.

But we *claim* the attachment of the pawls to the slides *a* a^1, operated as and for the purpose specified.

No. 17,724.—DEXTER H. CHAMBERLAIN, of West Roxbury, Mass.—*Improvement in Steering Apparatus.*—Patent dated July 7, 1857.—As the nuts N are moved in opposite directions by the revolution of the screw-shafts E and G, the cap P of the rudder head *o* is rotated on an axis passing longitudinally through the middle of the rudder post; the feathers *q* slide in slits *c*, their arms *f*, turning in their bearings in the nuts N, allow the feathers to maintain a position radial to the circle of revolution of the cap P.

Claim.—The nuts N, with their vibrating feathers *q*, in combination with the parallel shafts E, F and G, when the said nuts rest against and are guided by the middle shaft F, as set forth.

No. 18,663.—T. M. RICHARDSON, of Searsport, Maine, assignor to Himself and J. W. HAVNER, Searsport, Maine.—*Improvement in Steering Apparatus.*—Patent dated November 17, 1857.—E is the pulley attached to axle F, whose periphery is grooved to correspond with the grooves in the sheaves L L. This pulley may be of greater or less diameter according to the power required; the smaller its diameter, compared with that of wheel D, the more power will be given by the latter to the former.

The rope or chain M, as will be seen by inspecting the engravings, passes once and a half round in each of the grooves of pulley E; once and a half round in each of the "fore"-grooves of the sheaves L L, and once round in each of the aft-grooves of the same.

The inventor says: I do not claim the slotted tiller, as that was patented November 28, 1842, by P. T. Share; nor do I claim any of the parts, separately considered.

But I *claim* the described combination and arrangement of the rope or chain M, with the stationary grooved sheaves L L, and the grooved pulley E.

No. 17,122.—WILLIAM WILCOX, of East Hartford, Conn.—*Improvement in Surge or Cable Springs.*—Patent dated April 21, 1857.—The chain A being secured to the capstan, and the anchor attached to cable B, the operation of this apparatus is as follows: When the strain comes upon chain B, the rod *g* secured to plate *k* compresses spring *d* and India rubber disks *c*; the latter thus being expanded will form a tight packing in the cylinder *a*, and, as the strain on chain B continues, the compressed air between the Inda rubber disks *c* serves to relieve the sudden check upon the cable or vessel produced by a heavy sea.

Claim.—I am aware that surge-spring relievers, constructed of spiral springs of India-rubber disks and the pneumatic springs separately, have been used.

I claim the arrangement of the springs *c* and the springs *d* within the cylinder, operating as and for the purpose set forth.

No. 16,650.—E. H. SINNELL, of Orleans, Mass.—*Improvement in Attaching Extra Topsails to Vessels*—Patent dated February 17, 1857.

The inventor says: I do not claim the use of an extra topsail yard, nor the holding it stationary—*i. e.*, so as not to be raised or lowered—as both the use of an extra topsail yard, and so holding it, have long been known.

But I *claim* attaching and handging the extra topsail yard *e* to the topmast *a* itself by means of the combination of the collars *f* and *g* turning on the topmast, the forked brace *h* connecting said collars, aud the stationary annular plate h^1, on which the lower collar *g* rests and turns, so that said extra topsail yard shall swing from the axis of the topmast as a centre, and secure the advantages specified.

No. 17,209.—THOMAS ESTLACK, of Philadelphia, Pa.—*Improvement in Ice-cutting Attachments to Vessels.*—Patent dated May 5, 1857.—The share A is attached to the bow of the vessel C, by means of the chains D E F, in such a manner that its position may be adjusted as desired; and the cutters G are attached to the share A by means of swivels, that they may turn and adjust themselves in proper position whenever the vessel is turned.

The inventor says: I do not claim separately the share A, for that, or its equivalent, has been previously used.

But I *claim*, first, the cutters formed of the teeth *e*, constructed substantially as described, and attached to the inclined bars G, which are pivoted to the share A, as shown.

Second. The share A, when applied and secured to the bow of the vessel by the chains D D, E E, F F, and used in connexion with the cutters; the whole constructed and arranged as described for the purpose set forth.

No. 17,396—JAMES E. SIMPSON, of East Boston, Mass.—*Improvement in Apparatus for Examining Vessels' Keels.*—Patent dated May 26, 1857.—When the vessel D is in place on the dry dock *c*, and before the water is pumped out, the rods G are depressed until the ends *a* of the levers F touch the keel of the vessel, and the exact contour of the sole of the keel may be instantly known by the positions of the levers

G, which are employed along the whole length of the dock in certain distances from each other.

Claim.—The described apparatus for examining keels of vessels, consisting essentially of the levers F and rods G, arranged and operating in the manner substantially as set forth.

No, 18,819.—Francis D. Lee, of Charleston, S. C.—*Arrangement of Life and Treasure Buoy for Vessels.*—Patent dated December 8, 1857.—The engraving represents the transverse section of a vessel, (N showing the middle deck, and O the upper deck,) on which is placed a metallic air-tight chamber D, so arranged as to float in case the vessel founders.

On the top of the buoy is a metallic box containing a small buoy of cork, marked I, attached and surrounded by a coil of cord, so arranged that in case some unforeseen accident may sink the larger buoy, the small one may float to the surface and mark the location of the lost treasure, provided it be sunk to such a depth as may insure its recovery.

Claim.—The arrangement of the buoy provided with the means and appliances set forth, in relation to the chest or safe and indicating buoy, and the decks of the vessels, as and for the purposes described.

No. 16,510.—Thomas J. Woodworth, of Salem, N. J.—*Improvement in Supporting Masts in the Decks of Vessels.*—Patent dated January 27, 1857.—The nature of this invention consists in surrounding the mast A with a solid metal case, or supporter with an octagonal vertical aperture through the same, large enough to admit eight wedges *f f* around the mast in order to secure it in such a manner as to be perfectly water-tight without opening the seams of the deck *g g*.

Claim.—Constructing the partner for the masts of vessels, as set forth.

No. 18,411.—John Quigley, of Saugerties, N. Y.—*Improvement Means for Flooding Vessels.*—Patent dated October 13, 1857.—This invention consists in arranging a tube in relation to a chamber in the hold of a vessel, and open to the water in which the vessel floats, that the tube may be detached from the chamber by any person on the deck, and the water have free admission into the vessel, or the tube may serve as a conduit, through which, by means of a pump affixed to its upper end, water may be readily drawn up to the deck of the vessel and distributed therefrom as may be needed.

In the drawings, A is the chamber, B is the tube connected by a screw thread H with the chamber.

The inventor says he *claims* the arrangement of the tube and chamber in relation to each other, to their parts and connexions, and to the vessel, substantially as and for the purposes set forth.

No. 17,598.—J. W. Wetmore, of Erie, Pa.—*Improvement in Means for Propelling Vessels in Shoal Water.*—Patent dated June 16, 1857.—The locomotive wheel W is propelled by the arrangement of cranks *k h*, which are operated by rods *e f* and *i j*, and the wheel will be enabled to follow the unevenness of the ground by the connexion of the self-adjusting rods *h g* and *k l*.

Claim.—The arrangement of the arms *g h* and *k l* and *e f* and *i j*, in relation to each other, and to the crank shaft and toothed wheel, as and for the purposes set forth.

No. 18,969.—ARMIGEL W. HANDCOCK, of Allegan county, Mich.—*Improvement in Mooring Vessels.*—Patent dated December 29, 1857.—A is the hull of a vessel riding at anchor; B is the hawser payed out at the bow; C is the hawser payed out at the hawser hole D, which is fixed at a point abaft the forechains; the said hawsers being attached—the one to a bow anchor, and the other to a waist anchor.

Claim.—Mooring a vessel during foul weather, by means of two hawsers B and C, payed out at the usual bow hawser hole, and at the hawser hole D, which I especially construct abaft the forechains, whereby a bow anchor and a waist anchor are arranged and operated substantially in the manner and for the purposes set forth.

No. 17,826.—THOMAS BELL, of New York, N. Y.—*Improved arrangement of Camels for Raising Sunken Vessels.*—Patent dated July 21, 1857.—The camels or tanks being sunk and drawn to each end of the sunken vessel, the water is pumped out of said tanks by means of pumps *m*, and air is admitted to fill its place by means of tubes; the tanks, as the water is withdrawn, raise the sunken vessel to the surface.

The inventor says: I do not claim broadly the use of camels for raising sunken vessels, irrespective of the peculiar construction shown and described.

But I *claim* the arrangement of camels described, whereby great strength is secured to support a vessel while being raised and transported; and whereby the vessel will be lifted principally by the bow and stern, or where the greatest strength exists, and only partially fore and aft, or where the least strength exists; and whereby all the inconveniences attending the application and use of those devices which require that some of their parts shall be passed under the keel, or over or through the vessel, are avoided, and other numerous benefits secured, substantially as set forth.

No. 16,890.—GEORGE F. TRESCOTT.—*Improvement in Rigging Vessels.*—Patent dated March 24, 1857.—The nature of this invention consists in the lengthening out of the lower mast, above the hounds, so as to allow a storm-sail and yard No. 6 to be hung in a similar manner to the lower yard No. 7, under the top No. 5; and in reducing the topmast No. 2 in reverse proportion to increase of lower mast, and by a division of the lower rigging or shrouds Nos. 3 and 4, to given points Nos. 8 and 9, or hounds of lower mast. The top No. 5 to be reduced in size in suitable proportions to the mast.

The inventor says: I do not claim the dividing the topsail, as in Forbes' or Howes' rig, so as to form a storm-sail, but a separate and distinct sail and yard, which I call a storm-yard and sail on the lower mast, so that in the event of a ship losing her topmast or head of lower mast, would still have her storm-sails to work off a lee shore, and by the division of the shrouds the masts are better secured, though longer, and no more weight aloft than usual.

No. 17,165.—George T. May, of Tompkinsville, N. Y.—*Improvement in Sails and Rigging of Vessels.*—Patent dated April 28, 1857.—The nature of this invention will be understood by reference to the claim and engraving.

The inventor says: I am aware that boats and small vessels having one or more masts unsupported by rigging, and depending for support upon the hull, have been fitted with sails that have or may have a full semi-circular sweep, and I do not, therefore, claim broadly the use of a sail having such sweep.

But I *claim* the use of a self-supporting "set" of masts, whether the same is composed of two or more masts, they being stayed and sustained by rigging whose spread at the line of the deck shall not exceed the lines of the distance between the forward part of the pivot mast and the forward part of the spring mast of the set, as set forth.

No. 18,816.—Edward S. Keyser, of New York, N. Y.—*Improvement in Securing Hatches of Vessels.*—Patent dated December 8, 1857.—The nature of this invention consists in covering the seams of vessels' hatches with an India rubber packing, which, by means of iron, or other metal covers or screws, fitted for the purpose, can be compressed upon the seams tight enough to prevent the passage of any water through them, thereby obviating the necessity of caulking and the use of tarpaulins.

Claim.—The securing of ship hatches, and making the joints water-tight, by means of the hollow flanged ribs B, and the rubber and plates contained within it, which are pressed down over the seams or joints by the screws *d*, substantially as set forth.

No. 17,852.—John Woodville, of Chillicothe, Ohio.—*Improvement in Means for Stopping Shot-Holes in Vessels.*—Patent dated July 21, 1857.—The pad or disk A, when rolled up, as represented in fig. 4, in a cross section, is passed through the shot-hole *k*, as represented in fig. 3, and when through the hole, the pin *i* is withdrawn from the loops *j* by means of string *i*; the pad A then, by its own elasticity, spreads out, and rod *m* is forced into the tubular rod E^1, and the catch F is thrown from recess *g*. The spring F now forces the tube E against the shank of pivot L, and throws the pad A around directly over the shot-hole, as represented in fig. 1. The rod E^1 is then unscrewed from rod D, and the end of said rod is passed through bar H, and a nut d^1 is placed on it by screwing up while the pad is firmly secured over the hole, as represented in fig. 5.

Claim.—1st. The arrangement of the disk A, formed of India rubber and whalebone slats *a*, the rigid bar B, the jointed rod D, the chains or cords *c c*, and the springs C, relatively to one another, in the manner substantially as and for the purpose set forth.

2d. The arrangement on the bar D of the slide E the tubular rod E, the slide G with catch *f*, the rod *m*, and the straps *h*, relatively to one another, and to the disk and its attachments, substantially as and for the purposes set forth.

No. 17,349.—DAVID HINMAN & F. B. FOURNIER, of Berea, O., assignors to Themselves and R. J. PARKER, of Ogdensburg, N. Y.—*Improvement on Apparatus for Indicating the Speed of Vessels and Depth of Water.*—Patent dated May 19, 1857.—The pressure of the water upon the hinged wing D will be in proportion to the speed of the vessel through the water, the vessel moving in the direction of the arrow. The movement of wing D is transmitted to rack F by means of rod E, and the pinion *c*, being on the axes of an index, the latter indicates the velocity of the vessel.

Claim.—The arrangement of the movable wing D, with its joint *d*, the rod E and rack F, combined with the dial or indicator, substantially as described for the purpose set forth.

No. 18,835.—CHARLES WEED, of Boston, Mass., assignor to Himself and STEPHEN B. CRAM, of Boston, Mass.—*Improvement in Steering Apparatus for Vessels.*—Patent dated December 8, 1857.—In this invention, if either of the gears G or H should break, the rudder could be operated by a single screw, and if one screw should fail, the steering wheel K could be shifted to the other, the shaft being prolonged for this purpose. The nuts M and N, where they rest on the bar L, are grooved so that they each partly embrace the bar; this prevents any lateral strain or torsion of the nuts from being thrown upon the screws and bar; each nut embraces the bar on both sides.

The inventor says: I *claim* placing the parallel screws E and F, one immediately over the other, and connecting them by the gears H and G, the steering wheel being attached to one of the screws, in the manner substantially as described.

Second, I claim the stationary guide bar L, as arranged with the grooved nuts M and N and bearing blocks D, as set forth.

No. 17,892.—JOHN PONTON, of New York, N. Y.—*Improvement in the Mode of Raising Sunken Vessels.*—Patent dated July 28, 1857.—The nature of this invention will be understood by reference to the claim and engravings.

Claim.—I *claim* the arrangement of the adjustable and changeable supports D D, operating alone or in connexion with the slides *e e*, whereby the tanks A B may be brought more closely in connexion with, and the sustaining power of them more generally and uniformly distributed along, a vessel or body.

No. 16,487.—JOHN P. JOURDA, of New York, N. Y.—*Improvement in Raising Sunken Vessels.*—Patent dated January 27, 1857.

Claim.—I *claim* the arrangement and combination of the floats, chains, and chain bill or stopper, and chain dividers, for the purposes specified.

No. 18,539.—ROBERT FERGUSON, of New Orleans, La.—*Improved Apparatus for Unloading Vessels.*—Patent dated November 3, 1857.—When this invention is in practical operation, the load being placed upon one car it descends by its own gravity, until, at the lower extremity of the rail, the long arm of lever *l* presses against an inclined

stud S and causes projection *i* to be removed from under the platform, and the load to be discharged. The two cars C being connected by an endless chain F, the descent of the loaded car carries up the empty one, which, on being loaded, descends in its turn, disengaging the lever from the stud, and permitting spring *m* to carry projection *i* under the first platform.

Claim.—The combination of swinging platform *c*, arm *f*, lever *l*, and spring *m*, with the body of the carriage, operating as and for the purposes set forth.

No. 16,333.—ANDREW B. GRAY and ALEXANDER H. BROWN, of Washington, D. C.—*Improvement in Velocimeters for Vessels.*—Patent dated January 6, 1857.—This apparatus consists of a paddle-wheel E, the paddles 2 of which can be adjusted to any desired angle by means of eccentric S, and the connexion cranks between the paddles and said eccentric; and the revolutions of said paddle-wheel can be indicated by a registering apparatus, the entire apparatus serving as a velocimeter for vessels.

Claim.—The use of the adjustable paddle-wheel, which can be graduated to any number of revolutions by presenting more or less surface of paddle to the action of the water, in order, first, to fix it at its true point for registering correctly; and second, should any wear take place in the machinery for registering, it can at once be adjusted by changing the angle of the paddle.

No. 16,621.—WILLIAM R. WARDEN, of Boston, Mass.—*Improvement in Apparatus for Indicating the Height of Water in the Holds of Vessels.*—Patent dated February 10, 1857.—The inclined plate *v*, which carries the ball *w*, is placed at such height as that when the water and float *h* shall have risen in the hold to a dangerous height, the ball shall have been raised up to the inclined tube E, and will slide off the plate *v*, and through the tube E, towards box F, which box may be placed in the cabin or other suitable place. The ball when striking lever *i* will tip it so as to release the bell hammer b^1, and set the alarm mechanism c^1, &c., in operation.

Claim.—Operating the alarm apparatus, situated as described, by means of the balls W, ball-carrier V, inclined tube E, and lever *i*, with their co-operating mechanism; the whole operating together in the manner set forth.

No. 16,992.—JASON C. OSGOOD, of Troy, N. Y.—*Improvement in Hawse-Holes for Vessels, &c.*—Patent dated April 7, 1857.—The nature of this invention consists in beveling the edges of pulleys so as to fit against each other, whereby a right or slightly obtuse angled edge is formed, which does not cut or chafe the rope or chain, as the acute angle formed by their merely touching at the edges would be.

Claim.—I do not claim arranging a series of pulleys in a circle.

But I *claim* beveling the edges of the pulleys, in the manner and for the purposes substantially as specified.

VIII.—MATHEMATICAL INSTRUMENTS, &c.

No. 18,692.—THOMAS HILL, of Waltham, Mass.—*Improved Arithmometer.*—Patent dated November 24, 1857.—The process of addition by this invention is as follows: The wheels being each arranged with the character *o* opposite the openings *g*, the key *i*, which corresponds to the first figure of the column to be added, is depressed; then that one corresponding to the next figure, and so on through the column, using the first row of keys, or those belonging to the wheel C, when adding a single column, or one in the unit's place; each time a key, the wheel C, will be fed forward a distance corresponding to the number of the key depressed, and each time ten is counted on this wheel a tooth *n* on the wheel I will vibrate the arms H and G, and the wheel D will be fed forward one number, counting ten; and by a similar arrangement, when this wheel has moved a space of ten figures, it will operate the succeeding wheel of the series and count one on it, or one hundred. If several columns of figures are to be added, it is immaterial whether the figures are read from bottom to top or from side to side, the result will be the same, if the row of keys corresponding to the place of the figures, whether in the units, tens, or hundreds column, is used.

Claim.—First. The use in a mechanical calculator of the series of wheels C D, &c., having each a double row of characters, arranged in the manner and for the purposes substantially as set forth.

Second. Operating the said wheels by the keys *i*, the levers F, and pawls *b*, or their substantial equivalents, in the manner described.

Third. The wheel I, in combination with the arms H and G and pawl *l*, constructed and operating substantially as described for the purpose specified.

No. 18,675.—O. L. CASTLE, of Upper Alton, Ill.—*Improved Arithmometer for Adding.*—Patent dated November 24, 1857.—By means of this invention the operator can, by playing on nine keys, add any numbers together, and their result will be indicated on a dial. The ordinary ratchet arrangement is employed, and the extent of the addition is regulated by the number of index wheels, which can be increased at pleasure. The invention is further explained by the claim and engravings.

The inventor says: I *claim*, first, the combination of the repeater X, the stationary repeater stop 17, the sliding stop bars T^1 T^2, &c., and the stationary stop pin *w*, with the driving wheel D, or its equivalent, provided with a series of holes *e e;* the whole operating substantially as described to control the motion of the register.

Second. Combining the shaft of the driving wheel D, or its equivalent, with the keys S^1 S^2, &c., by means of a stronger spring *y* and a weaker spring R, and a lever 13 deriving motion from the keys; the whole operating substantially as described for the purpose set forth.

Third. Combining the keys with the sliding stop bars T^1 T^2, &c., by means of the wedges 8 8 attached to the keys, the arms U U sliding

on guide bars V, and the collars 6 6 and springs 7 7 applied to the guide bars, substantially as and for the purpose specified.

Fourth. The loose teeth *r* applied to the wheels *o o*, and operating substantially as described for the purpose specified.

No. 18,560.—THEODORE R. TIMBY, of Medina, N. Y.—*Improved Barometers.*—Patent dated November 3, 1857.—This invention consists in a mode of constructing barometers, whereby the liability to be broken from expansion of the mercury during transportation is entirely prevented; also, in suspending the barometer tube in the axis of a cylindrical case having a central hook, so as to serve the necessity of levelling or plumbing the instrument.

The inventor says: I *claim* the elastic tube between the stop cock and barometer tube, as set forth.

I claim the mechanical arrangement for supporting the barometer tube within the suspension glass case, the same consisting of the bracing rods *t t* passing through the glass and brass tubes *d* and *e*, and the wooden block *w*, the inner cap a^2, the blocks $w\ w^1$, the lower cap a^3, and the screw joint S, all arranged and co-operating as set forth.

No. 16,727.—JAMES FULTON.—*Improvement in Chronometer Escapements.*—Patent dated March 3, 1857.—M L R represents part of the escape wheel; A the roller, (partially broken away to show the lifting pallet B below it;) N the pivots of the staff; P C D a lever or pivots at E, with the detent pallet placed on its upper side at P; C is a banking attached to the plate for the lever to rest against, so as to limit the depth of the locking; F D G is a small lever or click, with its pivots playing in the lever at D, and is held against a banking attached at the lever at H by the pressure of the spring K G against the part G of the chick. It will be seen that the same pressure of the spring K G will hold the lever against the banking C.

Claim.—The combination of two levers in such a way that one spring may perform the offices above described by acting on both of them.

No. 18,661.—WILLFORD H. NETTLETON, CHARLES RAYMOND, and ANSON HATCH, assignors to W. H. NETTLETON, of Bristol, Conn.—*Improved Machine for Turning Pillars for Clock Movements.*—Patent dated November 17, 1857.—The engravings and claim show the nature of this invention.

The inventors say: We do not claim the use of two chucks, simultaneously brought up to turn the ends of a wire to form a pillar shaft or arbor, as the same has been in use and on sale for many years.

Neither do we claim any particular device for holding the turning-tools into the chucks; neither do we claim any sliding mandrel or mandrel head, as these are well known for other purposes; neither do we claim the straightener *b*, as the same is well known.

But we *claim* the feeding slide *h*, in combination with the straightener *b*, having an endwise movement and returning spring, or its equivalent, substantially as specified, whereby the straightener is

drawn along as the wire is fed forward, and straightens the wire as it is forced back by the said spring, or its equivalent, as specified.

We also claim the compound levers *i* and 19, made and acting in connexion with the feeding slide *h* and clamp 14, as and for the purposes specified.

We also claim the holding jaws *k* and 26, regulated in their action by the screws 28 and 29, and operating as and for the purposes specified.

We also claim the sliding gauge *m*, actuated by the cam 22, in combination with the holding jaw *k*, as specified, whereby the gauge *m* is withdrawn, while the pillar or arbor is being forced out of said holding jaws, but comes up to determine the length or position of the wire or blank that passes into said jaws, as set forth.

No. 18 890.—ROBERT P. CUNNINGHAM, of Eastford, Conn.—*Improvement in Clocks.*—Patent dated December 22, 1857.—In the engravings, *a* and a^1 show the spring pallets, the swing wheel shown at S *n*, the verge connected with the fork piece *q*, and arm *b p* b^1, and the extension *m*; the dampers are *d* d^1.

Fig. 2, in sections, shows pivoted pallets acting in the notch of the swing wheel S; *k* is a bridge, spreading each way from the pivot arbor, and connecting the two sides.

In fig. 3, *b*, formed as cover to a watch spring barrel, carries a slender return spring stop *i* projecting from a small stud *o*, standing inward from the cover as it is shut into the ring *j*; so the return part of the spring *i* bears evenly and lightly on the bridge *k* of the pallet, and thus is a guide to its middle or quiescent position, and this position is now adjusted by twisting the cover carrying the spring *i* within the ring *j*.

The inventor says: I *claim*, 1st, looped or slotted spring pallets acting tensively from the faces of the swing wheel teeth S.

2d. I claim the combination of the tensive pallets and swing wheel teeth, either with or without the stops *d d*, or with the stops *i* i^1, for the purposes shown in manner as set forth, or substantially their equivalents.

No. 16,418, M. J. WHITMORE, of Potsdam, N. Y., assignor to FRANK G. JOHNSON, of Brooklyn, N. Y., and M. J. WHITMORE.—*Improvement in Calendar Clocks.*—Patent dated January 13, 1857.—The wheel A revolves twice in twenty-four hours, consequently turns the pivot B, by pinion F, one-half a turn to each revolution of the wheel A, the last half revolution being between 12 and 2 o'clock a. m. The revolving of the pivot brings the cog of the centre pinion E in contact with the cog of wheel C, and turns it forward one cog or one day, and so continuing to turn it forward one cog each day, until the 31 days have passed. When a month of 30 days is to occur, one of the inclines R will be brought under lever g^1, forcing down the upper fork H, so as to bring the upper pinion E in contact with the cog D, on the upper side of wheel C. Thus the three pinions E can be thrown in gear with the different cogs D, by means of the slides R and M, to indicate the month of February and the February of the leap year.

Claim.—Placing the intermittent cogs D upon the upper and lower faces of the calendar wheel C, and giving said cogs the necessary movements for accomplishing the intended purpose, by means of the sliding and stationary and intermitting pinions E E E on the shaft B, all being combined together, and operated in the manner and for the purposes set forth.

No. 16,628.—EDWIN P. MONROE, of Albany, N Y., assignor to GILBERT H. SCRIBNER, of New York, N. Y.—*Improvement in Calendar Clocks.*—Patent dated February 10, 1857.—The cards *a*, each provided with two holes, and eyelets *b c*, are suspended upon the wires *e d*. The arm *f* is made to slide in a slot in the casement of the clock, and is connected with the clock movement, so that at a certain time each day the arm *f* will be caused to descend, when the wedges *g* will enter between the first and second card, and push the first card forward against the action of a slight spring at the front end of wire *e*. As soon as the eyelet *c* has slipped over said spring, the card will fall down, and remain suspended, with its lower eyelet *b* upon wire d^1.

Claim.—The displacing of cards for the purpose of enumerating and designating the day, said cards being suspended upon wires, as described, and displaced by means of a hand, as set forth, moved and operated by the machinery of the common hour clock, or by any other machinery appropriate for the same purpose.

No. 18,665.—WILLIAM H. AKINS, of Berkshire, N. Y., and JOSEPH C. BURRITT, of Ithaca, N. Y., assignors to WAIT T. HUNTINGTON and HENRY PLATTS, of Ithaca, N. Y.—*Improvement in Calendar Clocks.*—Patent dated November 17, 1857.—Upon the side of the corrugated disk I, between it and the plate J, is rigidly secured a wheel K, having forty-eight teeth, one for each month in every bissextile term. To the loose disk J is secured a plate *b*, having two lugs projecting over its side, through the upper one of which is passed a pin *c*, for the purpose of raising a weighted lever L, pivoted upon a stud *e* on the side frame, and having a pin *d* secured to its side, which, when the lever is allowed to drop as the lug revolves with the disk, engages with the teeth on the wheel K, and prevents it from being revolved more than one tooth at a time.

The disk I being rigidly secured to the wheel K, and the latter being caused to perform one forty-eighth part of a revolution at the expiration of every month, the former will also perform a revolution at the same time; and being provided with a number of elevations and depressions on its periphery, it causes the arm x^1 of the rock shaft X, which rests upon it, to rise and fall as it is raised by a ridge, or dragged down into a notch by the action of the spring x^2.

Claim.—The quadrennially revolving corrugated disk I, when operating in the manner substantially as and for the purposes set forth.

No. 16,902.—GEORGE R. CLARK and SAMUEL ADAMS, of Antioch, Mich.—*Improvement in Grade Delineators.*—Patent dated March 31, 1857.—The purpose of this invention is to describe the grade of that

part of the country to be surveyed, by driving over it with a wagon, the hind axle of which is connected with a driving shaft A which gives motion to the machinery of the grade delineator.

The claims and engravings will give the reader an idea of the nature of this invention.

Claim.—First. The use of the pendulum L, or its equivalent, operated upon by gravitation, in combination with the cones C D E, and the friction wheels G and H, or their equivalent.

Second. In combination with the pendulum L and the cones C D E, the arrangement of the arms *a b c*, the bars *d e f*, and the slides M, to move the friction rollers along the cones, substantially as described.

Third. The pendulum L, or its equivalent, with the paper rolls and grade pen, or either of them, in such a manner that their respective motions, as set forth, may produce correct horizontal or vertical scales, or a profile of the ground travelled over by the carriage.

No. 18,908.—George Juengst, of New York, N. Y.—*Improved Dynamometer.*—Patent dated December 22, 1857.—In operating this invention, a belt is arranged over the pulley B, so as to turn it with power in the direction of the arrow. The pulley, which turns with its hub loosely on the tube *z*, next pulls the belt R, which, drawing the sliding frame D, compresses the springs *g*, till the force applied is sufficient to overcome the resistance of the shaft by the corresponding pressure on the support roller E. The more power the pulley has to give out for this purpose, the further the belt R will be drawn from the support, the more will the springs be compressed, and the sliding frame with its ring F will be removed from its original position, so that the ring will stand more or less eccentric to the shaft A, in exact proportion to the power working on the pulley. According to the degree of eccentricity, the rod I and lever, with the disk L, will be moved more or less, and with it the attached registering apparatus. On lessening the power, the spring *g* will move the sliding frame, with its appurtenances, more towards the original position, make the movements of the lever smaller, and work accordingly on the registering apparatus.

Claim.—The connexion of the loose pulley B with belt R, the support C with the spring *g*, sliding frame D with ring F, and the connexion of F with disk L by lever and nipping pawl, and with a counting apparatus, or their several equivalents, by which arrangement the amount of working power is registered for the whole time of its action, substantially in the manner as set forth.

No. 17,185.—John W. Cochran, of New York, N. Y.—*Improvement in Gauges for Casks.*—Patent dated April 28, 1857.—This instrument being inserted in the bung-hole of the cask B, as represented in fig 1, the arms *h* can be extended so as to touch the sides or ends of the cask by sliding thumb-screws *b* down on rods *a*, and the distance the points of arms *h* are apart will be known by reference to a scale marked on rods *a*, from which the measurement of the cask can be calculated. When the bung-hole is not in the centre of the cask, the

pin *p* is withdrawn from thumb-screws *b*, and each of the plungers *d* can now be operated separately; the measurement of one arm *h* must be added to that of the other to get the mean diameter of the cask.

The inventor says: I do not intend to confine myself to this particular manner of constructing my gauge, but in any way, so long as it is substantially the same in effect.

I *claim*, first, the arrangement of the sliding plungers and set-screws, in relation to the connecting rods and measuring arms, by which I am enabled to work each arm independent from the other and gauge casks or vessels, whether the bung-hole is in the centre, in the head, or elsewhere.

Second. Making the measuring arms adjustable, as set forth.

No. 18,931.—FORREST SHEPERD, of New Haven, Conn.—*Improved Apparatus for Illustrating Conic Sections and the Lines of the Globe.*—Patent dated December 22, 1857.—This invention consists in mounting the globe with an extended tabular horizon, and movable, graduated meridians made of materials transparent, translucent, or opaque, capable of being written on with a pencil, and of having the writing, or work, easily wiped or rubbed off; and connecting with the globe a surface, divided into zones, &c., capable of being written upon with a pencil, and having the writing wiped off; and having the hollow cone so constructed that the pole of the globe may be elevated so as to mark the visible horizon from any latitude, or to mark the ecliptic.

The claim and engravings will further describe this invention.

The inventor says: I *claim* the combination of the globe, with an extended horizon or surface, as the base or convex surface of the cone, or any other extended surface on which may be written any geographical or other exercise with the globe, and be easily wiped or rubbed off, when constructed, arranged, and combined substantially as described.

I also claim the combination of the globe with the cone, when the cone is made in three or more segments, and the upper segment so cut as to illustrate the conic sections, and the whole is constructed, arranged, and rendered susceptible of the various uses as described and set forth.

No. 17,481.—SAMUEL C. BISHOP, of New York, N. Y.—*Improvement in Machines for Covering Insulated Wire with Lead or other Ductile Metal.*—Patent dated June 9, 1857.—A current of water being started through the water-courses entering pipe *m* in the direction of the arrow, and passing down between pipes *c* and *j*, then rising in pipe *c* and escaping through pipe *n*, the wire 5, covered with gum, is entered through tube *c* and pushed down until it enters die F; melted metal is then poured into recess M, and ram E is forced down by hydraulic pressure, whereupon the metal will be forced out of chamber M through the die, and as it leaves the steel point 2, it is closed around the gum with sufficient impingement to draw the wire down as the metal advances, so that each part of the insulated wire in succession is caused to pass the point where the metal leaves the steel point 2, and is therefore at that point exposed to the action of the metal, and this,

too, after the proper condition of temperature has been obtained between them.

Claim.—Causing the metal and insulated wire to move in separate channels toward a die, where they are to be united, and preventing the gum from being heated while it and the lead advance toward the die by a current of fluid passing in a suitable vessel or vessels between the metal and gum to receive and carry off the caloric, all substantially as described.

No. 18,572.—EDWARD CAVENDY, of New York, N. Y.—*Improved Method of Determining Approximate Latitude at Sea.*—Patent dated November 10, 1857.—The engravings represent the tube A as suspended by gimbals placed within an aperture in the top C of a tripod.

The tube is suspended in a self-adjusting vertical position at such a height that the observer can stand beneath its lower end, and, with his quadrant or sextant, reflect the sun to a point in the heavens directly over the axis of the tube, when by the appearance of the shadow thrown into the upper end of said tube from a ring placed a short distance above the same, he is able to indicate the very instant the sun attains its highest altitude, and to measure the number of degrees that the sun, at the said instant of time, is below the zenith, which sum, when deducted from ninety degrees, will give the exact altitude of the sun above the horizon.

Claim.—The described method of determining approximately the zenith of the observer, under the circumstances set forth.

No. 18,963.—J. B. ELLIOTT, of Philadelphia, Pa.—*Improved Device for Attaching Lightning Rods.*—Patent dated December 29, 1857.—The two wires $g\ g^1$ are secured in the head of a malleable cast iron spike or nail *i*, which is driven into the building, and this spike or nail may be cast around the wire. The wires are formed of ordinary iron wire, which, being a worse conductor than copper, prevents the fluid from passing into the building. On the shank of the nail or spike *i* there is placed a piece of gutta-percha *j* to prevent moisture from working in around the spike.

The inventor says: I do not claim forming a conductor of corrugated metal strips or plates, for they have been previously used.

Neither do I claim serrating or notching the edges of the strips which form the conductor, nor do I claim the manner of connecting said strips.

But I *claim* connecting the conductor to the building by means of the wires $g\ g^1$, bent as shown, and secured in the head of the spike or nail *i*, for the purpose set forth.

No 17,606.—SAMUEL C. HUBBARD, of Middletown, Conn., assignor to CHARLES C. HUBBARD, of the same place.—*Improvement in Machines for Graduating Lineal Measures.*—Patent dated June 16, 1857.—The rule to be graduated is placed upon the dies on bed B, said dies having the lines and characters formed upon them in relief, which it is desired to imprint on the rule; by turning crank G, a reciprocating motion is given bed B by means of bands E, and the cylinder D presses the rule

on the die, while at the same time the points P mark the longitudinal lines on the rule. In order that the indentations on the disk may always meet the joints of the rule, it is necessary that the disk should begin its motion in a determinate position. To insure this, the side of the disk is fitted with a pin K, which strikes against a stop L on the frame, and is held there by the tension of spring M coiled around shaft N; and as the disk D is turned by friction alone, it always commences turning when the rule on the dies bears against it in passing under; in this way, the position of the disk in starting, with respect to the rule, is always the same.

Claim.—In combination with dies for imprinting the figures and transverse lines upon the rule, graves or points, arranged and held as described, for marking the gauge or longitudinal lines on the rule, as described.

Also, the pressure disk D, with one or more indentations on its periphery corresponding to the knuckles of the joints of folding rules when this is combined with giving to the disk thus constructed a self-acting reverse motion, to bring it back after each impression of a rule to the precise point whence it started, substantially in the manner and for the purpose specified.

No 16,359.—James Jones, of Rochester, N. Y.—*Improvement in Instruments for Measuring Boards.*—Patent dated January 6, 1857.—A detailed description of this invention would take up too much space to be given here; the principal features thereof will be understood by reference to the claim and engravings.

The inventor says: I am aware that the quantities of areas have been indicated by means of the combination of a cone or disk, with a roller sliding thereon; therefore I disclaim the use of the above elements, either separately or when combined with a single index, as in the machine of M. Ernest, described in the "Bulletin de la Societe de l'Industrie Nationale."—Vol 40, pl. 841.

But, in all the cases which have come under my observation, the instrument constructed on the above principle has been used only for application to plans or drawings of the area to be measured; and therefore I *claim* my means of so adapting the instrument that it may be applied to the actual surface, whether of a board or other article, such means consisting of the outer and inner disks D and B, combined with the two indexes—one of said indexes being intended to regulate the position of the friction roller R on the inner disk, and the other for indicating the quantity measured.

No. 18,313.—William W. Wythes, of St. Clair, Pa.—*Improvement in Machines for Measuring Cloth.*—Patent dated September 29, 1857.—This improvement consists in the employment of a measuring roller and pressure roller, the latter being hung to a spindle in such a manner that the edge of the fabric to be measured may be readily introduced between the two rollers and maintained in contact with the measuring roller. As the fabric is drawn along, the measuring roller revolves and communicates motion to a pointer as well as to a num-

bered plate, so that the exact amount of fabric passed through the rollers can at once be ascertained.

The inventor says: I do not claim, exclusively, the employment of rollers in connexion with an index for measuring fabrics.

But I *claim*, first, the arrangement of the measuring roller A, with the pressure roller B, when the latter is hung loosely on a hinged spindle, and acted upon by a spring, and when it is exposed at the end for the admission of the fabric, substantially in the manner set forth.

Second, the combination of the shaft *i*, wheel *d*, lever *l*, shaft *j*, wheels *e* and *h*, numbered plate *m*, index *p*, and pointer *b*, when the whole are arranged substantially in the manner set forth and for the purpose specified.

No 18,711.—JAMES D. SMITH, of Brantingham, N. Y.—*Improved Machine for Multiplying Numbers.*—Patent dated November 24, 1857.—The object of this invention is to enable persons readily to ascertain the gross value of articles when a certain price for fractional parts is given. The invention consists in having a rotary disk, graduated on one side and numbered, so as to form a table; said table being used in connexion with a graduated stationary index.

The inventor says, this device is used as follows: Suppose, for instance, that the gross sum or value of an article is required to be known, the article weighing 10 lbs. and the price 6 cents per lb.; the disk A is turned until the line *d*, numbered 10 at the periphery of the disk, is brought in line with the left edge of the index or bar C, and the amount opposite, or by the side of figure 6, on the bar or index, will be the gross or aggregate sum, viz: 60 cents.

Claim.—The combination of the rotating disk A, and stationary index or bar C, graduated and numbered, as described, for the purpose set forth.

No. 17,870.—CALVIN COLE, of Tarrytown, N. Y.—*Improvement in Adjustments Applied to Pendulum Levels.*—Patent dated July 28, 1857.—The position of the spiral level L, at right angles to the pendulum F, can be adjusted and secured by set screw J and spring K.

The inventor says: I do not claim the use of a pendulum to give indications of level or angular surfaces; nor do I claim the use of a spirit level, disconnected from the combination in which I use it.

But I *claim*, first, the adjusting platform H, with its attached set screw J and spring K, as described, and for the purpose set forth.

Second. The adjustment of the dial C, plate around the axis of the pendulum by the set screws D D^1, as described.

No. 17,023.—THOMAS A. CHANDLER, of Rockford, Ill.—*Improvement in Levels or Inclinometers.*—Patent dated April 14, 1857.—The index F is attached to shaft G, and serves to indicate the degrees on the graduated circle B. The pendulum I is also hung upon shaft I, and when said pendulum is at rest, the index F has the position as represented in the engraving. The apparatus is fitted within a stock A,

and the manner of using it will be readily understood by reference to the engraving.

The inventor says: I *claim* the combination of an entire graduated circle, provided with a pendulum and index, with the two parallel sides of the level stock, whereby I am enabled to apply either side of said stock to the surface whose direction is to be ascertained, and at the same time have the index facing the operator, in whatever position he may be placed.

I do not claim the level stock, with its opposite sides parallel, nor the graduated indicating circle or dial, nor the indicator with two horizontal and one vertical pointer, nor the knife-edge bearing, upon which the indicator and pendulum are mounted, nor the pendulum, because separately, and for other purposes, they are all well known; but they have never before been combined to form a level, nor has a level of any kind ever before been made capable of performing the functions of this combination.

Therefore I claim the level composed of the before enumerated parts in combination, whereby, among other things, either edge of the instrument may be used uppermost, with its face or dial towards the operator; and when any two of the pointers are screened from sight by an intervening body, the third will indicate the inclination of the surface to which the instrument is applied, and the angles at the head and foot of a rafter will be indicated at the same time.

No. 18,701.—Robert Norris and Frederick Peters, of New York, N. Y.—*Improved Pendulum Quadrant.*—Patent dated November 24, 1857.—This instrument consists of a quadrant frame C, an arch or limb D, a pendulum A, with a tell-tale B, a stopper E, with a wind protector K, a sight tube H, and an index F, with a nonius G. The quadrant frame and the arch, which comprises a quarter of a circle graduated in the usual manner, and the index with its nonius, are constructed like the same parts in similar instruments.

The inventors say: We do not claim a quadrant for taking altitudes without the aid of a natural horizon.

But we *claim* the pendulum with its tell-tale, in combination with the index, the sight tube, and the other parts of the quadrant, as described.

No. 17,253.—R. P. Baily, of Niagara, N. Y.—*Improvement in Signal Lamps.*—Patent dated May 12, 1857.—This invention consists in providing a common hand lamp, with colored cylinders D E, which may be raised up into the darkened part of the lamp, thereby showing nothing more than the common light, while, by disengaging the spring fastenings *j*, and thereby allowing the movable ring F to turn and drop the tube over the burners *s* by means of the chains H, a signal may be given in case of danger or other emergencies.

The inventor says: I do not claim the common globe or hand lamp, as that has been in use a long time.

But I *claim* the means employed to raise and lower the colored tubes, as set forth, by means of the rings and chains H H, so constructed and attached that one tube or cylinder may play or move up

and down within the other, and independent of each other, thereby allowing the different colors to be changed without obstructing each other.

No 18,159.—ALBERT POTTS, of Philadelphia, Pa.—*Improvement in Signals for Steamboats.*—Patent dated September 8, 1857.—The signal light is mounted by means of a movable crane M, upon the paddle-box B, of the steamer, and is revolved by means of gearings Q R P U T S, which latter is secured to the main shaft of the engine.

Claim.—The system of signals for steamers formed, as set forth, by lights mounted upon movable cranes, and rotated from the paddle-wheel or propeller-shaft.

No. 18,194.—GEORGE N. CUMMINGS, of Hartford, Conn.—*Improved Machine for Expanding Spectacle Bows.*—Patent dated September 15, 1857 —A partly formed eye-rim, which is made smaller than when finished, is placed upon the platform E, over the top of the jaws A, when closed. By turning crank-shaft B, the jaws will open by the action of the oval part of said shaft, and stretch the eye-rim to its proper size and shape; the jaws then close by the reaction of spiral spring C.

Claim.—The spectacle eye-former made in two parts, as described, the circumference of the two parts when closed being smaller than the eye, and being expanded by the double former to the required size, in the manner and for the purpose as herein set forth.

No. 18,327.—SAMUEL DARLING, of Bangor, Me.—*Improvement in the Manufacture of Metallic Squares.*—Patent dated October 6, 1857.—Figures 1 and 2, in the drawings, represent in perspective the square in question, showing the tongue and beam separate and united together. The leading feature in the manufacture of this square consists in uniting the tongue and beam together by solder.

Figure 1 is the beam of the square, which may be made of any kind of metal. B is the tongue thereof, which is made of steel. Figure 2 represents a modification of the plan shown in figure 1 for making the beam. The tongue B is made of steel, but not hardened except at the edges. The edges of the tongue are hardened by placing it between two pieces of thick iron, allowing the edges of the tongue to project on all sides; the tongue and side pieces are then heated sufficiently for the purpose, and afterwards plunged into water, which hardens the edges and leaves the centre soft.

The inventor says: What I *claim* as new is a square, when constructed substantially as set forth and described.

No. 17,991.—JOEL WHITNEY, of Winchester, Mass.—*Improvement in Adjustments for Try-Squares.*—Patent dated August 11, 1857.—The beam *b* are composed of the three parts F F *g*, which are secured together by means of screws *e*, said screws securing also the tongue *a* to beam *b*. By unscrewing the screws, which pass through holes *j k*, the tongue *a* can be adjusted to the beam by turning the eccentric pin *d* by means of a screwdriver.

Claim.—The flattened pin C working in the slot, in combination with the eccentric pin, arranged substantially in the manner and for the purpose described.

No. 18,728.—CHRISTOPHER BECKER, of Brooklyn, N. Y.—*Improved Surveying Level*—Patent dated December 1, 1857.—The engravings and claim show the nature of this invention.

The inventor says: I *claim*, 1st, the constructing of the telescope with square surfaces *a a*, resting upon small points or surfaces upon the supports, and attached to the same in the manner and for the purposes described.

2d. I claim the arrangement, construction, and manner of operating the spider threads by one screw only, as described.

3d. I claim the arrangement of the set screws S, acting directly upon and square to the axis of the instrument, in the manner specified.

4th. I claim the arrangement and construction of the micrometer and tangent screws, so as to prevent any dead movement, in the manner described.

No. 18,608.—JAMES M. LILLEY, of Greenville, Va.—*Improved Instrument for Surveying and Calculating Areas.*—Patent dated November 10, 1857.—In this invention the graduated rule C and quadrant E can be shifted along the groove M to either end of the limb B, at the pleasure of the operator; the position in the slide will not interfere with the accuracy of the instrument. In shifting the rule C from one end of the limb B to the other, the rule C has to be inverted, and the slot L, in the opposite end, placed in the groove.

Claim.—The combination of three scales A, B, C, and quadrant E, as used for the purposes already set forth.

No. 17,355.—WILLIAM F. CHANNING, of Boston, Mass., and MOSES G. FARMER, of Salem, Mass., assignors to WILLIAM F. CHANNING aforesaid.—*Improvement in Fire-Alarm Telegraph.*—Patent dated May 19, 1857.—If a fire is discovered in the vicinity of a signal station *z*, an authorized person opens the signal box, and turns crank a^1 a number of times; the teeth b^1 b^2, on the circuit wheel, depressing the key c^1 c^2, and in this manner break and restore the circuit at definite intervals, the key returning by its own elasticity; this operation causes the electro-magnet and armature of the central station Y, by repeated strokes on *r*, to indicate the number of the district and station whence the alarm designates. The operator at the central station Y, by turning crank A, operates the transmitting apparatus A B, causing the bells at the alarm station V to give the alarm, and, by tapping on key m^1 m^2, the number of the signal station originating the alarm may be transmitted to any of the signal stations *z*.

Claim.—1st. The signal system described, consisting of a series of signal stations scattered at intervals through a whole city or town, or any part thereof, and telegraphically connected with a common centre or point, or with each other, by one or more signal circuits, by which means a constant communication may be established and maintained between all parts of a city or town, however extended; and

with the centre or centres at which the signal circuit or circuits converge or meet, so that the moment the fire occurs, its existence and locality may at once be known at the centre of the system, and efforts for subduing it properly directed.

2d. The alarm system described, consisting of a series of alarm stations, suitably distributed throughout a whole city or town, or any part thereof, and telegraphically connected with a central station by one or more alarm circuits, by which means a public alarm of the existence and locality of a fire may be given at different points.

3d. In combination with the alarm system, for striking the number of the district upon the alarm bells, the signal system for communicating the number of the station at which the fire occurs to all the signal stations, as well as for communicating an alarm to the central station.

No. 18,022.—JOHN E. SMITH, of Troy, N. Y.—*Improvement in Telegraphic Repeaters.*—Patent dated August 18, 1857.—A detailed description of this invention would take up too much space to be given here; the principal features thereof will be understood by reference to the claims and engravings.

The inventor says: I do not claim the opening and closing of the local circuit by magnetism produced by the opening and closing of the main circuit.

But I *claim* the connexion of a battery at each station with the line wire, and with two local cross connexions, in such manner that, by means of the key and relay lever, the cross connexions through the register magnet and the other cross connexions are alternately broken, and the battery thrown upon the main line, and its current caused to operate the relays on the line wire, like a main current, till shut from the line by the relay lever, as described, whereby each battery is made to perform the duty of an ordinary local battery while not wanted on the line wire, and to perform the duty of a main battery while not wanted as a local.

Second. The key placed in the local circuit and constructed, as described, to open and close the said circuit in two branches, to give two directions to the current over the line wire, substantially as and for the purpose set forth.

No. 18,626.—EDWARD C. CLAY, of Boston, Mass.—*Improved Device in Telegraphic Fire-Alarm Apparatus.*—Patent dated November 17, 1857.—In operating this invention, the operator at the central station, having received the alarm from one of the minor stations, sets the hand F at 60, and the hand E at the number of the district in which the fire may be, (say at 2;) this places the snail K in the position shown in the engraving, when the pin *e* will strike against the second step on the periphery of the snail K, and allow the escapement I to be drawn over by its springs *d*, in the direction of the arrow, just so far that it will require to be fed up two notches by the shaft M, before the pin *e* is again brought into the path of the arm *l*; when this occurs, the revolutions of the shaft are arrested.

Having thus arranged the hands, the operator moves the key U

against the resistance of spring V; this moves the long bent rod T, and vibrates the lever S, and lifts the pin *n* clear of the segment *f*, when the spring *d* immediately draws near the escapement I, until the pin *e* rests against the snail K. As soon as the pin *n* has been lifted, and the escapement I has vibrated, the key U is released by the operator, and the pin *n* falls again into the segment *f*, and acts as a retaining pawl. When the pin *e* is drawn out of the way of the arm *l*, the shaft M revolves. Each movement of the shaft causes the bells to strike once, moves forward the index hand one mark, and feeds up the segment *f* one notch; now, as the position of the segment *f* is repeated by the index hand, the number of the district will be struck and counted, when the pin *e* will again be brought into the path of the arm *l*, and the operation be stopped.

Claim.—The snail K, or its equivalent, and dial plate, in combination with the single key U.

No. 16,828.—Moses G. Farmer and Asa F. Woodman, of Portland, Me.—*Improvement in Telegraphic Repeaters.*—Patent dated March 17, 1857.—In engraving, fig 1, A^2, A^3, two distant stations, this invention is supposed to be placed at an intermediate one. If the independent circuit be broken by an operator at A^2, the relay magnet at B^2 will be discharged, and this will discharge the local magnet at C^2, and break the dependent circuit at X^2. This will cause the lever B to be tipped, and thereby prevent the independent circuit being broken at the instrument, or at X^4. From this it will be seen that the main circuit, which is first broken, (which may be called the independent circuit,) determines which way the beam B shall incline, and that this inclination, while it allows the instrument to break the dependent circuit, prevents it from breaking the independent circuit.

Claim.—The use of a mechanical obstacle, essentially in the manner as set forth, whereby, when the independent circuit has broken the dependent circuit at the instrument, the dependent circuit is prevented from breaking the independent circuit.

No. 18,149.—John P. Humaston, of New Haven, Conn.—*Machine for Punching Paper-Fillets for Transmitting Telegraphic Signals*—Patent dated September 8, 1857.—A detailed description of this invention would take up too much space to be given here; the principal features thereof will be understood by reference to the claims and engravings.

Claim.—First. The manner of operating the punches for perforating the characters in the paper, consisting of the revolving type-wheel, or other equivalent means of indicating characters, in combination with the punches, as described.

Second. The method of regulating the feed of paper, consisting of the graduated stop-wheel, or equivalent series of stops, in combination with the type-wheel, and with the means for propelling the paper-fillet past the punches, as described.

Third. The manner of forming the cutting ends of the punches—that is to say, having its advancing end formed into two cutting edges, by means of the V-shaped recess, in combination with a second pair

of cutting edges opposite to them, formed in like manner and upon the same plate, but in position at a right angle to the first pair; thus making the other half of the shear, in conjunction with an adjoining punch, substantially in the manner set forth.

No. 18,131.—SAMUEL C. BISHOP, of New York, N. Y.—*Improvement in Insulated Telegraphic Wires, enclosed in Metallic Tubing.*—Patent dated September 8, 1857.—A current of water is started through the water-courses 5, in the direction of the arrows, and the wire covered with gum is entered into the inner tube through cup *l*, and pushed down until it enters die F. The melted metal is then poured into recess M, and the ram E is forced down; whereupon the metal will be forced out of chamber M, and, as it leaves the steel point 2, is closed around the gum with sufficient impingement to draw the wire down.

Claim.—The article above described as a new manufacture, consisting of wire insulated by a covering of gutta percha, or India-rubber, firmly enclosed in a coating of lead or other ductile metal.

No. 18,147.—HENRY HOCHSTRASSER, of Philadelphia, Pa.—*Improvement in Attaching Wires to Bell Telegraphs.*—Patent dated September 8, 1857.—The spring C is interposed between the purchase crank A and the machine to be moved; so that if the wires are pulled further than the machine will admit, the strain will come upon the intermediate springs, and not on the cranks.

The inventor says: I do not claim any improvement on any machine to which the intermediate springs may be attached.

I *claim* the intermediate spring, or its equivalent, substantially as described.

No. 16,665.—WILLIAM D. WESSON, of Chillicothe, O.—*Improvement in Electric Telegraphs.*—Patent dated February 17, 1857.—A are posts along the whole road. The metal elbows D D are insulated from the brackets C B, to which they are pivoted at *a*. The elbows are only allowed to play slightly between pins *b c*, which are also insulated. Each elbow is connected with the nearest elbow on the next post A by conducting wires E. The wires E are fringed with fine iron wires *f*, which hang down and vibrate freely. The pendulum I is swung forward by the circuit-breaker L on the vehicle V, (as the latter passes along,) and is thus caused to turn the shaft G far enough for the crank *g* to raise the movable conductor or circuit-closer H out of contact with the elbows D D, and thus break the circuit in the line of wires E. The circuit-receivers upon the vehicle consist each of a horse-shoe electromagnet J J, having iron plates *k k* attached to its poles; these plates are in constant contact with the wires *f*. The circuit-receivers are connected by a conducting wire *y*, having a telegraphing apparatus in its circuit.

Claim.—Constructing the stationary telegraph line of a series of immovable and interposed movable conductors; and furnishing the vehicle with a circuit-breaker, circuit-receivers, and conductors, arranged to operate substantially as set forth, for the purpose of breaking the circuit through the main line at a point or points where the

vehicle is passing, and completing the circle through, so that by suitable telegraphing instruments or apparatus carried by the vehicle, communications may be transmitted and received by the vehicle to and from other vehicles, or to and from stations at a distance, either while the vehicle or vehicles are stationary or in motion, as set forth.

No. 17,673.—HARRISON GRAY DYAR, of New York, N. Y.—*Improvement in Electric Telegraphs.*—Patent dated June 30, 1857.—A detailed description of this invention would take up too much space to be given here; the principal features thereof will be understood by reference to the claim and engravings.

The inventor says: I do not claim any particular mode of obtaining the synchronism of the vibrations; nor confine myself to vibrations or any particular form of motion to produce the like effect; nor the use of any particular means for obtaining the electric action; nor the kind of signals, signs, marks, or recording; nor particular modes of arranging the apparatus; leaving it to those who use my invention to employ such apparatus, whether vibratory, rotary, or oscillatory, as they may deem best suited to accomplish the object desired under the different circumstances which may arise.

But I *claim* constructing and operating signalizing telegraphic apparatus in such manner that electric pulsations representing signals, resulting from the actions of two or more operators at work at the same time, are imparted alternately and successively to a single main conductor or wire of communication, and received therefrom and distributed in the same alternating succession, whereby a single main conductor may be made the instrument by which two or more operators can be simultaneously employed in sending different messages, either in the same or opposite directions, substantially as set forth.

I also claim transmitting different electric signals, resulting from the actions of two or more operators working at the same time, at the same or opposite ends of a single main conductor, by means of a single main conductor combined with two or more sets of corresponding signal-sending and signal-receiving conductors, which represent the different signals in use, and are appropriated to different operators by means of intermediate circuit-making and circuit-breaking apparatus, which are moved in harmony at the signal-sending and signal-receiving stations, in such manner as to present themselves successively in all the positions required to permit currents of electricity to be passed alternately through the corresponding members of the signal-sending and signal-receiving conductors, whereby the apparatus at each station can at the same time be employed in transmitting and receiving signals representing messages, substantially as set forth.

I also claim transmitting electric pulsations to a main conductor, and distributing them from the same main conductor by two sets of circuit-making and circuit-breaking apparatus, which are moved in harmony with each other, but are moved by the mechanism independently of the other portions of the telegraphic apparatus, in such manner that the harmonious movement of the circuit-making and circuit-breaking apparatus at either end of the main conductor is not impeded

or controlled by the irregular movement of other parts of the telegraphic apparatus.

I also claim sending and receiving signals, as stated, by apparatus so arranged and combined with the main conductor that, in operating, the impulse that closes or opens the circuit shall last but for a moment, while the contact maintained at the station where the signal is received shall last a longer period, so as to advise of the necessity of exact synchronism in the movements of the mechanism at the two stations.

No. 17,997.—BENJAMIN T. HARRIS, of Brooklyn, N. Y., assignor to JOHN MCKILLOP, of Brooklyn, aforesaid.—*Improvement in Machines for Marking Time of Attendance of Workmen.*—Patent dated August 11, 1857.—The cylinder C, which is operated by the hour-wheel of a clock-work within the case A, has a paper wound up on its circumference, which is ruled and marked, corresponding with the motion of the cylinder and hours of the day. The workman, upon entering the shop, presses the upper marker I, through slot *j*, against the ink pad *g*; raises it till it is opposite his number on the plate E, and prints the letter I opposite his number. When the workman leaves the shop, he makes an impression opposite its number with the marker O, and, as these markers cannot be moved to the right or left, the impression upon the paper on cylinder C must indicate the time at which it was made.

Claim.—1st. The combination of the registering surface operated by clock-work with the movable markers, when the latter are arranged as set forth.

2d. The combination of the movable markers and their arms *k* and *l* with the indicators *u* and their concomitant parts, as set forth.

No. 16,344.—JAMES TUERLINGX, of New York, N. Y.—*Improvement in Maintaining Power for Time-pieces.*—Patent dated January 6, 1857.—The weight F runs down the incline or spiral *e*, and the power thus derived is applied to clock-works by the guide rods *g* connecting the head 4 and wheel *h*, said guide rods passing freely through holes in the weight F; the winding up of this clock is effected by elevating the weight F, which can be done by raising rod *n*, fork *o*, and fingers 8; and when this is done, the power of the weight to rotate the clock is relieved. To keep the clock running during the time of winding up, a spring 10 is employed, which acts in the direction of the revolution of wheel *h* against one of the guide rods *g*, said spring receiving its tension by the running down of the clock.

The inventor says: I do not claim giving motion to wheels or other articles by means of a sliding nut or weight on a screw or circular incline, as that is not new. But such an arrangement is objectionable as applied to a clock, because the weight, hanging on a moving screw, would cause so much friction as quickly to wear out the parts and derange the same, particularly if the clock be moved about; but by having a fixed screw or circular incline, down and around which the weight moves, all the strain and friction is taken by the said incline as a fixture, and the weight only acts on the parts of the clock through

the medium of the rods *g g*, or their equivalents, with the power required for propelling the clock.

Therefore, I *claim* the fixed screw or circular incline *e*, carrying the weight *f*, combined with the rod *g g*, or their equivalents, for communicating the motion and power from the said revolving weight to the wheel *h*, substantially as specified.

Also, the retaining spring 10 on the weight *f*, combined with the fork *o* and fingers *g*, or their equivalents, that will lift the weight up bodily, and allow said retaining power to act, substantially as specified.

No. 17,055.—George P. Reed, of Waltham, Mass.—*Improvement in Watches.*—Patent dated April 14, 1857.—The nature of this invention will be understood by reference to the claim and engraving.

Claim.—Arranging and fastening the barrel B, with respect to the pillar plate A, essentially as described; that is, so that it shall extend through the pillar plate and be fastened to the dial side of it; in combination with arranging the main gear-wheel G so that it shall operate as a barrel head or cover to the barrel, and have the retaining power applied to it, substantially as set forth.

IX.—CIVIL ENGINEERING.

No. 18,395.—Joshua E. Hall, of Cleveland, Ohio.—*Improved Apparatus for Barns, Stables, &c., for Rescuing Horses and other Stock from Fire.*—Patent dated October 13, 1857.—In using this improvement, the animal is tied to post U, above the spring V; this is a light spring of sufficient strength to hold up the halter. When the frame E is released, the post and spring assume the position indicated by *u* and *v*, in fig. 1. In this position, as the animal pulls to get away, the halter slips under the spring, and over the post, so that the animal is at large.

As the section *e* descends, the section E^1 moves correspondingly; so that the section *e* touches the animal on the haunches or tail, and the animal is pushed from behind, while he is being drawn by the bridle attached to the post.

While the animal is under the frame, when it is at E^2, he is protected from the flames or falling brands, as the covering of the section E^1 forms a kind of shed, when in the position at E^2.

The inventor *claims* the swing frames E E^1, arm J, and cord H, and also in combination with the spring V and post T, when the same is arranged substantially as set forth for the purpose specified.

No. 17,256.—Matthias F. Brantingham, of Sangamon county, Ill.—*Improved Portable Barrack.*—Patent dated May 12, 1857.—The upright posts A B C D are inserted in the ground, and the crops of whatever kind are stacked around them, until the stacks are as high as desired; the rings *a* are then secured to said posts, by means of

bolts *b*, as represented in fig. 2; and the beams *d* are attached to said rings by means of hooks. The rafters 3 and 4 are then secured to beams *d*, and beams 2 to rafters 3 and 4, by means of pins, when the framing of the roof is ready to receive any suitable covering.

Claim.—The combination of separate and detached pieces of material, as described, so as to form a barrack, which can be used for the protection of crops from the weather, and which can be readily separated again for removal from place to place, and then reconstructed.

No. 16,473.—JAMES B. EADS, of St. Louis, Mo.—*Improved Apparatus for Blasting Rocks under Water.*—Patent dated January 27, 1857.—The charge of powder is secured in the chamber B, and the mortar A, together with the charge, is let down on the rock to be blasted, the charge being fired by a fuse, which passes through passage *b*.

The inventor says: I am aware that weights and braces have been essayed as auxiliaries in blasting rocks on land; these I do not claim, nor do I claim blasting on land, or dry blasting, at all.

I *claim*, in combination with the column of water over the rock or other material to be blasted, a mortar or weight of greater specific gravity than the water, to act as an auxiliary in holding the blast to the rock, as set forth.

No. 18,037.—JOHN CARPENTER, of Stonington, Conn.—*Improved Device for Piercing Blind Slats to Receive the Staples.*—Patent dated August 25, 1857.—A detailed description of this invention would take up too much space to be given here; the principal features thereof will be understood by reference to the claim and engravings.

The inventor says: I am aware that machines have been constructed for cutting the tenons simultaneously at both ends of blind slats, as in the machine patented by Hastings, Bumsey, & Chamberlain, February 20, 1855; and also for cutting the tenons and piercing the slats for wire staples simultaneously, as in the machine patented to T. G. Stagg, March 28, 1854; but I do not claim any device or action included in either of these machines referred to.

I do not claim the application of a sliding dog to clamp and hold the slat, while another dog or other device independent of this is used for piercing the slats for the staple.

But I *claim* the application of the piercing points *h* to the sliding dog, so that the slat may be pierced for the wire staples by the same action as that by which they are held secure for forming tenons thereon, as described.

No. 17,064.—JESSE N. BOLLES, of Philadelphia, Pa., assignor to M. W. BOLLES, of the same place.—*Improvement in Apparatus for Boring Artesian Wells.*—Patent dated April 14, 1857.—This boring tool being operated in the usual manner, the cutter A, at the bottom, strikes the rock with sufficient force; and, on its being raised again, the valves J close and bring up the detritus; which, by its continued operation, causes an upward current of water, carrying with it all the cuttings, and discharging them through the apertures N in the upper rod G.

Claim.—The combination of cylindrical boring rods with cutters and valves so constructed as to discharge the detritus upon the surface of the ground at every stroke of the drill, as described, or any other mode substantially the same, which will produce the same effect.

No. 16,572.—THOMAS W. H. MOSELY, of Covington, Ky.—*Improved Bridge.*—Patent dated February 3, 1857.

Claim.—First. The compound arch constructed substantially as set forth.

Second. The saddle pieces S S, in combination with the stirrups E E and said compound arch.

Third. The sliding suspension plate D, in combination with the chord M and radial suspension rods, as set forth.

Fourth. The corrugated shoes *k k*, as set forth.

No. 18,253.—ABRAM S. SWARTZ, of Buffalo, N. Y.—*Improvement in the Trussed Bridge.*—Patent dated September 22, 1857.—The nature of this invention consists in making an iron tower to support the arch, the base of which is held against the thrust of the arch by wrought iron horizontal tension bars, and the top thereof by a suspension rod C. The tower A, the horizontal tension bar B, and the suspension rod C, when taken together, make a figure in the form of a right angled triangle, the foot of the arch D resting upon the tower within this triangle.

The inventor says: I *claim* the arrangement of the parts described, so that the tower A, the tension bars B, and the suspension rod C, when taken together, will present the distinctive feature of a triangle with the foot of the arch D resting upon the tower within the triangle, substantially as set forth.

No. 16,728.—ALBERT FINK, of Parkersburg, Va.—*Improvement in Bridge Trusses.*—Patent dated March 3, 1857.—The inventor says: I do not confine myself to the particular form of the shoe casting *d*, or the mode of connecting the suspension rod with the same. This may be varied according to circumstances to carry out the object in view, viz., the support of either the upper or lower chord of truss.

I do not claim the general arrangement of the parts *b b*, *c c*, *a a*, or any of the details of their connexion with each other; but what I do *claim* is the use of an auxiliary truss which is to consist of the lower part c^1, of the counterbrace $c\ c^1$, and of a piece c^2, placed between the two main braces *b b*, independent of these braces, substantially as herein set forth.

No. 16,446.—D. C. MCCALLUM, of Owego, N. Y.—*Improvement in Bridges.*—Patent dated January 20, 1857.—The nature of this invention consists in combining the arch braces A B with the arch chord A C, the top horizontal surface of the abutment or pier, and the lower chord L C, by means of a cast iron shoe S and the tension rods T *r*, whereby the thrust of the arched chord is thrown down upon the abutment, and any deflection in the lower chord is counteracted by an upward force at each end of the tension rods; and also in the method

of lengthening or shortening the braces C B of a bridge-girder by means of plates *a* and *b*, straining pieces *c*, and screw nuts *d*, by which the truss may be elevated or compressed as required.

Claim.—So combining the arch brace with the arched chord or beam, the top horizontal surface of the abutment or pier, and the lower chord or tie, by means of the iron shoe and tension rods, as that the thrust of the arched chord shall be thrown down upon the abutment, and any deflection in the lower chord be counteracted by an upward force at each end of the tension rods, substantially as described.

Also, the method of lengthening or shortening the braces of a bridge truss or girder, by which the truss may be elevated or depressed, as required, by means of the yoke *a*, the plate *b* on the end of the brace, and the straining pieces *c c*, with their nuts *d*, substantially in the manner described.

No. 18,196.—Charles H. Earle, of Green Bay, Wisconsin.—*Improvement in Bridges.*—Patent dated September 15, 1857.—The sections of this bridge can swing on their hinged parts *a* in the abutments A, and can be raised by heavy pressure from below, the cap *c* sliding on pile b^1 up and down, according to the height of the water.

The inventor says: I do not claim making a bridge in sections.

Nor do I claim the attachment of sections of bridges to their abutments by knuckle joints or hinges, as I am aware that drawbridges have been constructed with such attachments.

But I *claim* the supporting of those ends of the several sections B B of the bridge which are not connected directly with the abutments, by attaching them to cap pieces *c*, or their equivalents, fitted to rise and descend on piers, in combination with the attachment of the sections next the abutments, with knuckles or hinges, whereby the bridge is rendered self-adjusting, and prevented being carried away by accumulations of ice, floods, or other causes leading to lift the bridge from its place.

No. 17,684.—Francis C. Lowthorp, of Trenton, N. J.—*Improvement in Iron Truss Frames for Bridges.*—Patent dated June 30, 1857.—The nature of this invention will be understood by reference to the claim and engravings.

The inventor says: I do not desire to confine myself to the precise form of straining plate described, as the same may be adapted to receive a greater or lesser number of lower chord rods, or to any description or number of diagonals and verticals.

But I *claim* the straining plate B, in combination with the rods G and H, when the latter are connected to the plate substantially in the manner set forth, and when the said plate is arranged to receive the vertical or verticals A and diagonals D^1 E of iron truss frame bridges.

No. 17,722.—Josiah Brown, Jr., of Buffalo, N. Y.—*Improvement in Truss Bridges.*—Patent dated July 7, 1857.—The nature of this invention will be understood by reference to the claim and engravings.

The inventor says: I do not claim broadly furnishing the main or

counter braces with gains, and passing them between the timbers of the cords.

But I *claim* providing each of the main and counter braces C D with two gains *c* at top and bottom, and each of the timbers of the chord A B with a gain *b* at a point where the braces are applied, corresponding with the gains in the braces, and passing the braces thus formed up between the timbers, with the gains of the braces in such relation to the gains of the timbers that when the timbers of the chords are brought together, they are combined, and become, as it were, only one piece, no part of which can be operated upon or affected independently of the other by the downward and upward thrusts common to truss bridges, even if the bolt which passes laterally through and intersects each set of braces and the timbers of the chords were removed, substantially as and for the purposes set forth.

No. 18,548.—FRANCIS C. LOWTHORP, of Trenton, N. J.—*Improvement in Iron Truss Frames for Bridges, &c.*—Patent dated November 3, 1857.—This invention relates to improvements in iron truss frames composed of upper and lower chords, vertical posts, diagonals and counter diagonals and consists in so constructing and arranging the vertical posts that they may be allowed to vibrate in the upper and lower chords, and that the bottom of the end posts may be allowed to vibrate on the piers or foundations. These improvements have for their object facility of erecting the frames, avoiding the injurious effects of expansion and contraction on the structure as well as on the piers, and also preventing the effects of sudden shocks from passing trains and other sources; these improvements are also intended for the purpose of avoiding the planing, fitting, and turning, and other work generally required in the construction of other truss frames.

The engravings and claim further show the nature of this invention.

The inventor says: I do not wish to confine myself to the precise form or size of the parts described.

I *claim*, first, arranging and constructing the vertical posts of iron truss frame girders for bridges and other structures, in relation to the upper and lower chord, substantially in the manner set forth, in order that the said posts may be allowed to vibrate on the chords, for the purpose specified.

Second. Allowing the end posts of truss frame bridges to vibrate on the piers or foundation, for the purpose set forth.

No. 17,864.—GEORGE S. AVERY, of Lewisboro', N. Y.—*Improvement in Segmental Truss for Bridges, &c.*—Patent dated July 28, 1857.—The nature of this invention will be understood by reference to the claim and engravings.

The inventor says: I *claim* an improvement in segmental truss bridges by a combination of the arched top chord, horizontal bottom chord X, braces, vertical tie-rods, packing blockings A, and self-adjusting shoes B; the whole constructed, as described, into a segmental truss, of greater strength and stability than such as are generally used with the same amount of building material.

I distinctly disclaim the invention of the several devices taken in the construction of my bridge trusses.

But I *claim* the combined arrangement of the different parts, as described and set forth.

No. 17,962.—LEWIS FISHER, of Buffalo, N. Y.—*Improvement in Water Closets.*—Patent dated August 11, 1857.—When a person occupies this chair, the seat will be brought down by the weight of the person, and the spring B will simultaneously withdraw the cover A; on rising, the seat is thrown into the position represented in the engraving, by the action of the spring B, which also slides the cover A over the pot K.

The inventor says: I disclaim removing the cover by the weight of the person upon the seat, broadly considered; as this has heretofore been done in the construction of water closets.

I *claim* the arrangement of the sliding cover A with the jointed seat D and springs B, for the purposes and substantially as described.

No. 18,550.—FRANCIS MCGHAN, of Washington, D. C.—*Improvement in Water Closets.*—Patent dated November 3, 1857.—Chamber C, being in communication with the supply pipe by pipe *d*, will fill with water above the valve *b*; and as the upper surface of the valve is greater than the area of opening *a*, the valve will rest close to its seat, and no water be permitted to pass to pipe D. Pressure downward on the spindle S will force water through the pipe *d* into the pipe D, against the head of water; and on the removal of this pressure, the head of water through pipe D will lift valve *b*, and water will flow to the pan A. This flow of water will continue until sufficient passes through pipe *d* to fill the displacement in chamber C, and close valve *b*. This time will depend on the size of opening regulated by the stop-cock K.

The inventor says: I claim the adjustable communication *d k*, between the supply pipe D and the chamber B, above the valve *b*, in combination with the displacing diaphragm *f*, or its equivalent, arranged and operating as set forth.

No. 18,972.—JAMES T. HENRY and WILLIAM P. CAMPBELL, of Philadelphia, Pa.—*Improvement in Water Closets.*—Patent dated December 29, 1857.—A is an oblong box; B its cover; *a* the usual opening in the same; and *b* the hinged lid for said opening. Within the box are situated the basin C, valved chamber D, and cistern E. The basin C has a curved pipe *c*, communicating with the chamber D and exit pipe *e*. Attached to the valve *d* is a spindle *f*, guided by a cross bar *h* in the pipe *g*, which terminates at an opening *i* in the cover B, the spindle being finished at the top with a handle *j*, by means of which the valve *d* may be lifted at pleasure. A pipe F forms a communication between the cistern E and the curved pipe *c* of the basin C.

The inventors say: Disclaiming the discharging of a stream of water into the pipe communicating with the basin from a cistern, the level of water in which is the same as that required in the basin when the valve is closed, as such a device is shown in the English patent of John Ody, sealed May 13, 1855.

We *claim* the chamber D, with its valve *d*, in combination with the pipe *c* of the basin C, the cistern E, and communicating pipe F, when the same are constructed and arranged in respect to each other in the manner set forth and for the purpose specified.

No. 18,404.—JAMES MITCHELL, of Osceola, Iowa.—*Improved Digging Machine.*—Patent dated October 13, 1857.—This improved machine is best described by the manner in which it operates, which is as follows: The machine rests upon rails to facilitate its movements. The shaft *a* is rotated in the direction of the arrow, producing the alternate rise and fall of the picks P. Taking the position of fig. 1, where they are elevated, the continued movement of shaft *a* causes them to penetrate the earth, as shown in fig. 2. Meanwhile stud S presses upon arm *m*, and throws bar E rearward, causing the picks at the time of their penetration to move to the rear and loosen the earth behind them. As the shaft C rocks toward the rear of the machine, producing the elevation of the picks, arms *e* of this shaft move forward and cause pawls *f f* to turn ratchets *g g*, and with them wheels B B. This moves the machine forward a sufficient distance for the picks to penetrate unbroken ground on their next descent.

The inventor says: I *claim* passing the pick handles through the rock shaft C, and attaching them to the traversing bar E, in combination with the arms *m* and *n* of shaft G, studs S, and springs *h* actuating said bar, the arrangement and operation being substantially as set forth.

No. 18,398.—EDWARD HOLMES and BRITAIN HOLMES, of Buffalo, N. Y.—*Improvement in Ditching Machines.*—Patent dated October 13, 1857.—When this machine, as improved, is at work, the elevating belt A *a* and the compressing belt H move in the same direction, consequently the compressing belt will assist in carrying up the dirt. It will also serve to prevent the dirt from falling off at the sides. The plough is composed of several parts or distinct pieces, namely: the horizontal cutting blade D, the expanding side cutters E, the side pieces D *d*, and the elevating apron *b*.

The inventors say: We *claim* the horizontal blade D, the expanding side cutters F, and elevating apron *b*, when arranged and operating together substantially as set forth.

We claim the combination of the elevating belt A *a* and compressing belt H, or equivalents, with the elevating apron *b*, for the purpose of taking the dirt from the apron, and continuing its passage up, until dropped on to the horizontal conveyer, substantially as set forth.

We claim the scraper *u*, for the purpose of scraping the dirt from the elevating belt, and giving it direction so that it will fall upon the transverse conveyer, substantially as described.

No. 18,689.—JOSEPH GRAY, of Raymond, Miss.—*Improved Levelling Instrument for Ditching, &c.*—Patent dated November 24, 1857.—In using this invention, having marked out the lines for a number of ditches, the bars D E are adjusted to a horizontal position, and the lines for the furrows, or a suitable number of them to serve as suffi-

cient guide for the ploughman, are marked in the same manner as the ditches.

As the bars D E are of considerable length, say one foot or more, the grade, or level, may be marked for a considerable distance along the face of a hill without moving the stand of the instrument; and when this is necessary, the same lines can be continued to any distance. Instead of the bar D having a slit *j*, it may have a hair-line like the bar E.

Claim.—The combination of the two adjustable bars D E, provided with graduated sectors, with the table A and bar C, or other equivalent support, capable of being adjusted in a level position, for the purpose of laying out levels or grades in a direction transverse to the line of vision, as described.

No. 18,627.—WILLIAM N. CLARK, of Chester, Conn.—*Elastic Door-Guard.*—Patent dated November 17, 1857.—A simple form of this improvement is shown in the illustrations. A represents a hemispherical piece of India rubber, surrounded by an escutcheon or ring B, which, by means of screws C, fastens the rubber to the wall in such a manner or position that the ordinary knob of the door may strike the guard when the door opens wide.

The inventor says: I *claim* the elastic door-guard described, for the purposes set forth.

No. 17,242.—HENRY TRYON, of Steuben, Pa.—*Improved Arrangement of Door-Sill and Door-Strip.*—Patent dated May 5, 1857.—The door-strip C is secured to the bottom of the door; and when the door is closed, said strip works against the cast iron sill D, and removes the snow, ice, or dirt, from the sill, and any snow that may collect between the end E of the door-strip and the jamb H will pass behind the circular flange C.

Claim.—The construction of my door-strip, as shown at C, in connexion with the sill, constructed as described, or any other construction substantially the same, and which will produce the same result.

No. 17,513.—ALBERT W. MORSE, of Eaton, N. Y.—*Improvement in the Mode of Hanging Doors.*—Patent dated June 9, 1857.—The bar *b* is pivoted to the plate *a*, which is attached to the door, and can play loosely on its pivot; thus when the door warps, it has no influence on the position of the roller or rollers *c*, which at all times can run true on their rails *d*.

The inventor says: I am aware that doors have been suspended upon rollers by means of a standard permanently attached to the door; therefore, I make no claim to this.

Nor do I claim the standard roller or any of the parts, of themselves.

But I *claim* giving the roller C an independent motion of the door, thereby allowing the roller to adjust itself to the rail, and revolve on it with its plane parallel with said rail, in the manner and for the purposes set forth.

Not intending in these claims to limit myself to the precise arrangement of parts described, but to vary the same at pleasure, while the same ends are attained by means substantially the same.

No. 18,554.—M. C. Root, of Toledo, Ohio.—*Improvement in Iron Shutters for Doors, Windows, &c.*—Patent dated November 3, 1857.—In the engravings, A represents a window-casing, and B a sash fitted therein. C represents the shutter. The shutter is constructed of iron slats *a*, the upper and lower edges of which are folded or bent at opposite sides, as shown in a^1, the upper edge of one slat fitting in the lower edge of the one immediately above it, as shown. At the end of each slat, and at its upper part, a loop or hook *b* is formed.

Underneath the sill *d* of the window or door, a box or recess D is formed, the upper part of which has a slide *e* placed over it; and in the upper cross piece *f* of the casing a slide-catch *g* is placed, the slide having a spiral spring *h* attached to it, and a knob is attached to its inner end.

The inventor says: I do not claim broadly the making of metallic shutters in such a manner that the slats shall fold and unfold in a self-acting manner when raised or lowered. Examples of devices of this character may be seen in the rejected case of Richard Murdock, May, 1851, and in King's case, June 10, 1856.

I *claim* the construction of metallic shutters in the manner described.

No. 16,341.—James Smith, of Cleveland, Ohio.—*Improved Weather-Strips for Doors, Windows, &c.*—Patent dated January 6, 1857.—In closing the door A, the ends *d* of the rods *b* come to bear against the set screws *g*; and, in consequence thereof, the rods *b* are bent at their joints *c*, as represented by the dotted position in fig. 4, which movement forces the weather-strips D and D^1 down to the floor. On opening the door, the rods *b* expand to their straight position, and the weather-strips are raised from the floor by the action of springs *a* and a^1. The set screws *g* can be screwed in the frame B, so as to be out of reach of the ends *d;* the door-strips do not operate then, and remain raised from the floor on opening and closing the door.

Claim.—In combination with a weather-strip hung to its springs, a jointed rod and set screw for operating it, when said rod is made to press down the strip at one point only, as set forth; and this I claim, whether the strip be arranged in the door, or in or under a shield on the door, or both, substantially as set forth.

No. 16,874.—John T. Foster, Jacob J. Banta, of Jersey City, N. J., and James H. Banta, of Piermont, N. Y.—*Improvement in Weather-Strips for Doors, Windows, &c.*—Patent dated March 24, 1857.—The nature of this invention consists in the use of one or more strips of metal or similar substance, inserted in deep narrow grooves or mortises in one or more sides of a door or window, and sustained by pins in diagonal slots in such a manner that the shutting of the door or window forces out the metallic strip or bar, bringing its edge in contact with the sill or door of the post, excluding wind, dust, &c.

The inventors say: We *claim* constructing weather-strips with dia-

gonal slots, taking pins in the door in such a manner that an endwise motion given to said strip in shutting the door shall cause the weather-strip to press on to the sill or casing, substantially as and for the purposes specified; it being distinctly understood that we lay no claim to a bar having a similar movement, but actuated by levers, rods, or links.

We also claim the manner specified of hanging the vertical weather-strip *f* in connexion with the upper and lower weather strip *b* and *e*, so that the endwise motion of the latter strips shall force said strip *f* against the vertical door post, as specified.

No. 17,809.—A. P. Routt, of Somerset, Va.—*Draining Machine.*—Patent dated July 14, 1857.—The soil displaced by the mould-boards is prevented from falling back into the furrow by the action of roller A; and thus, by once passing over the soil, perfect drains for conducting the water are formed.

Claim.—The employment in connexion with a double mould-board plough of a heavy V-shaped or taper roller G, said roller being hung so as to run behind and between the two mould-boards, and so as to be capable of revolving and adjusting itself to the different depths at which the plough may be set to cut, substantially as and for the purpose set forth.

No. 16,886.—Augustus Stoner, of Mount, Pa.—*Improved Grappling or Dredging Machine.*—Patent dated March 24, 1857.—To operate the machine, the ends K of the cross or centre-piece A^1 or A^2 are let down under the nozzles S or projections of the uprights c^1 c^2 or c^3; then, by any ordinary tackle raising the machine, its entire weight is borne by the chains *g* and cross-piece A, and the levers drop of their own weight, spreading out the hooks or shovels attached; thus set, it can be lowered any depth, and so soon as the machine lodges, the pressure is removed from the cross-piece A, and points S (which sustained the machine while in the air or water) now drop and lodge on the ring B. Upon again hoisting the machine, the cross-piece, either by coming with the arms *k* over the levers F, or the drop-kneed upright c^2 being down, with their points S resting on the ring, so that in either case the chains *g* now operate on their respective levers, causes the hooks, shovels, or buckets to move inwards to a common centre on their respective fulcra *f*, and firmly grasp and hold mud or anything that may come in thier way. The machine, which is now sustained by levers F, can be hoisted and lowered to where its contents are to be lodged.

Claim.—The combination of the machine, the supporting and lever-shifting cross-piece A, and the mitred shovels D, when combined in the manner set forth; the ring B, or its equivalent, to sustain the apparatus and chains, so linked and constructed to operate all the levers simultaneously, and sustaining the cross-piece A aforesaid; said combination being substantially in the manner and for the purposes set forth.

No. 17,959.—ASA BLOOD, Sr., of Norfolk, Va.—*Improved Dredging Machine.*—Patent dated August 11, 1857.—The rope J being attached to a spar of the vessel, the apparatus is lowered when the parts are in the position represented in figure 1. As soon as the apparatus reaches the bottom, the hook of dog E is unhooked from rod *a* by arms D C moving upward; and by now pulling on rope J, the arms D close on the material to be elevated, as shown in figure 2, and the apparatus and material can now be elevated by means of a tackle.

Claim.—First. The dog E, in combination with the beam A and rod *a*, operating as described; for the purpose of holding the dredge open in descending, and for relieving its hold by its own weight as soon as the weight is taken off the chain or rope.

Second. The combination of the levers B C and C^1 with beam A and rod *e*, operating as described; for the purpose of opening and closing the dredge, as described.

No. 18,352.—WILLIAM PLUMER, of Boston, Mass.—*Improved Rock-Cutting and Drilling Machine.*—Patent dated October 6, 1857.—This invention consists in a new arrangement of devices for cutting and drilling stone, copper, &c., and more particularly for cutting out pillars and blocks of stone; the cutter being operated in such a manner as to work out a circular pillar of any diameter, and also to cut out a square, or rectangular, or irregular-shaped block, by working on all sides of the same. In this invention the cutter will operate and be fed along as well horizontally at right angles to the cut as in every other direction.

The inventor says: I *claim*, first, feeding the cutter laterally in a direction at right angles to the cut, or nearly so, whether the cutting tool be situated horizontally, vertically, or at any angle, by the devices described or their equivalents, so arranged that the cutter or drill can be turned at right angles to the straight track of the machine, and also the requisite feeding motion be obtained, as set forth.

Second. I claim the slotted arms c^1 d^1 and e^1 f^1, so arranged and constructed as to permit the whole cutting apparatus to be turned at right angles to the cut, and to communicate, when fastened together, the lateral feeding motion to the frame *r r*.

Third. I also claim the arrangement of devices described, whereby I am enabled to feed the cutter working vertically in a circular direction, and set the cutter at any desired distance from the centre upon which the machine turns, by which blocks or pillars of any desired diameter can be cut out, as set forth.

No. 17,766.—LEMUEL P. JENKS, of Boston, Mass., and GEORGE ARTHUR GARDNER, of New York, N. Y., assignor of GEORGE A. GARDNER, aforesaid.—*Improvement in Rock Drilling Machines.*—Patent dated July 7, 1857.—As the shaft B is rotated, the mandrel W has a reciprocating motion imparted to it by cam C operating against the roller X of said mandrel. The feed of the drill is effected by means of feed-screw P, which is operated by pawl M and ratchet O, and the turning of the drill after each stroke is accomplished by the action of pawl T and ratchet V; both pawls T and M are operated by eccentric *E on shaft B*, rods F I and lever T^2, turning on fulcrum K.

Claim.—The peculiar combination and arrangement of the devices described, whereby the rotation of the mandrel and drill, as well as the gradual and proper advancement of both drill, mandrel, and frame, or either of them, is effected by means of a single eccentric on the cam shaft B, in the manner and for the purpose set forth.

No. 17,765.—LEMUEL P. JENKS, of Boston, Mass., assignor to GEORGE A. GARDNER, of the same place.—*Improvement in Rock-Drilling Machines.*—Patent dated July 7, 1857.—Rotary motion being given to the shaft B, the cams D press against the bars E, and the crosshead C is pressed back, the spindle I passing through the head-piece J as the India rubber spring K is compressed on said spindle; as the cams D revolve further, the heads E are set free, and the India rubber spring K expanding propels the plunger H, rod L, crosshead M, mandrel N, and drill O, against the rock to be operated upon.

The inventor says: I do not claim India rubber springs. Neither do I claim the use of metallic springs in rock-drilling machines.

But I *claim* the use and application of the India rubber K, when interposed in such manner that its expansive force shall operate the drill in rock-drilling machines, substantially as described.

No. 17,896.—MOSES T. ROWLANDS, of Pittston, Pa.—*Improvement in Machines for Drilling Rock.*—Patent dated July 28, 1857.—Motion being given to shaft M, wheel N is rotated, and with it the helve S of hammer P, which is hinged to the periphery of wheel N; and the hammer is caused to vibrate between the spring T and stand U of the wheel N, and is thrown outward and caused to strike drill V; at each revolution of the wheel, the spring W of the wheel N pressing the drill to the rock, when the drill recoils from the stone after each blow.

Claim.—The combination of the vibrating centrifugal hammer with the rotating spring W and loosely attached drill V, arranged to operate in relation to each other, for the purpose of facilitating the drilling of rock, as described.

No. 16,787.—THOMAS H. BURRIDGE, of St. Louis, Mo.—*Improvement in Rock-Drills.*—Patent dated March 10, 1857.—The rod *b* is secured to the head L, and works freely through the sliding head N, so that the drill-bar in descending brings the nut S in contact with the head N, and forces it down just the distance the drill cuts in the rock, thus allowing the drill to feed itself and keep the end of the bumper O always the same distance from the top of the drill-bar. The bumper O works freely through the head N, and has a collar around it, above the head, upon which the spring R takes its bearing. The drill-bar in rising strikes the end of the bumper O, and compresses the spring R, by which the energy of the blow is regulated. In the inside of the slide M is a ratchet, and to the head N is attached a spring T, which works in this ratchet and prevents the head from rising when the drill-bar strikes the bumper O.

Claim.—The combination of the sliding head N; with the ratchet

guide-piece M, bumper O, spring R, rod *b*, and drill-bar A^1, when said parts are constructed and arranged for joint operation substantially as set forth.

No. 17,304.—JOHN D. HOPE, of Niagara Falls, N. Y., assignor to G. ARTHUR GARDNER, of New York, N. Y.—*Improvement in Rock-Drills.*—Patent dated May 12, 1857.—The ridge A is raised on the two transverse corners of the flattened part of the drill, and the edges of the centre and the wings are brought to a cutting surface, as represented in fig. 2.

The inventor says: I do not claim the shaping the cutting point of the drill into the shape of the letter Z, as that form of drill has long been in use.

But I *claim* the formation and shaping of the wings or ridges on the transverse corners of the drill, substantially as described.

No. 18,561.—GEORGE H. WOOD, of Green Bay, Wis.—*Improvement in Rock-Drills.*—Patent dated November 3, 1857.—The operation of this invention is as follows: The frame E is first adjusted, or turned and secured in proper position for the drill to act upon the rock, and motion is given to the shaft I; and as said shaft rotates, the arms *e* of the tappet K strike successively the roller *n* in the frame L, and draw back the box N; and as the strap M is attached to the end of the box N, said box will, as it is drawn back, be inclined, as will also the plate *y*, and this oblique position into which the plate is drawn by the strap, causes the aperture at the centre of the plate to clutch the drill G, which is consequently drawn back with the box N. As the box is drawn back, the spring P is compressed; and as the arms *v* of the tappet pass the roller *w*, the drill is forced against the rock by the spring P, and is rotated a certain distance in consequence of the roller *d* on the box N^1 actuating the lever H, which communicates motion to the ratchet *u*, through the medium of the pawl *r*.

Claim.—The employment, in combination with a drill, raised, turned, and operated as above described, of the supplementary spring R, for the purpose of controlling the rebounding of the drill G, in the manner as set forth.

No. 18,763.—JOSEPH E. NESEN, of New York, N. Y.—*Improvement in Rock-Drills.*—Patent dated December 1, 1857.—This invention is an improvement in the method of mounting rock-drills, so that they may be readily adjusted to the direction that it is desired the hole may be bored in the rock.

The inventor says: I am aware that rock-drills have been previously mounted so as to be capable of being adjusted in one direction only, viz: in a vertical plane, longitudinal with the frame on which they are placed; and I am also aware that means similar to that described have been employed for effecting the purpose. The ratchet Q and pawls R R have also been used.

I therefore do not claim the ratchet Q and pawls R R.

Nor do I claim the slotted semi-circular plates M M, and their connexion with the frame N, as shown, when separately considered.

Nor do I claim the wiper or tappet L.

But I *claim* attaching the semi-circular slotted plates M M and frame N to the adjustable frame E, fitted to the uprights *c c* of the frame A, as shown, and for the purpose set forth.

No. 18,573.—JOHN COWDON, of New Orleans, La.—*Improved Earth-Moving Machine.*—Patent dated November 10, 1857.—The claim and engravings will explain the nature of this invention.

The inventor says: I *claim* the combined arrangement of the gear-wheels 3, 4, 5, 6, 7, 8, 9, 10, 11, 12, 13, 14, 15 and 16, and pulleys 17, 18, 19 20. 44, 45 and 46, and the chains or cords *f h* and J, all arranged on the shafts, as represented, or substantially the same, and for the purpose of giving and regulating the forward motion of the machine and movement of the elevators, in the manner and for the purposes mentioned.

I also claim the construction of the elevators by dividing them into three, more or less, pieces, and arranging the pieces 31, 32 and 33 to the chain 26 and hook pieces 34, as specified and represented, or substantially the same, for the purpose of causing them to expand or spread for freeing the dirt from the elevators when being discharged, in the manner and for the purposes specified.

I also claim the combination and arrangement of the parts with, and employed for carrying the end of, the conveyor frame, consisting of the carriage P, cord *o*, and pulley stake 59, friction rolls 30 30, and driving pulley 50, or substantially the same, operated in the manner and for the purposes specified.

I also claim the combined arrangement of the shaft 37, nut 38, wheel axis 39, with the frame-work 41, as represented, for elevating and lowering the rear end of the frame of the machine preparatory for steering and giving the machine direction, as specified.

No. 18,113.—JAMES A. WATROUS, of Green Spring, Ohio.—*Improved Apparatus for Suspending Eave Troughs.*—Patent dated September 1, 1857.—The bar B^1 of the trough is suspended to the loop of the metal strap D^1, the ends of which strap are passed through the slotted plate C^1, and are turned down to the right and left respectively.

The inventor says: I do not claim the suspending of eave troughs by bolts and nuts, as patented by Woodruff.

But I *claim* the employment of a metal strap D^1, in combination with the cross bar and slotted plate C^1, for securing and readily adjusting eave troughs.

No. 16,519.—JONATHAN R. ANDERSON, of Chicago, Ill.—*Improved Excavating and Dredging Machine.*—Patent dated February 3, 1857.—The nature of this improvement will be understood from the claims and engravings.

Claim.—The so arranging of the dipper with a travelling carriage as that they may be automatically moved in and out on the arms, for the purpose of insuring the filling of the bucket when the material to be excavated is hard, as set forth and explained.

I also claim, in combination with the lever *p*, the sliding piece U, clutch bar T, and pawl *r*, with their several appliances, so that by a single lever the attendant has entire control of the machine, as set forth.

No. 17,595.—ALONZO TAGGART, of Warrenton, Mo.—*Improvement in Excavating Machines.*—Patent dated June 16, 1857.—As the machine is drawn along, the scraper B scrapes off the surface of the earth; and when said scraper is filled, it is elevated to the horizontal position represented in fig. 2, by turning windlass *r*, when it can be carried to the place of deposit. On unhooking one of the stay-chains *b* or b^1, the scraper can be tilted and unloaded.

Claim.—The free draught connexion of the scraper by chains *c c*, in combination with the balancing suspension chains *a a* and the opposite stay-chains *b b*, arranged and operating in connexion with frame and windlass, substantially as and for the purposes set forth.

No. 16,652.—JESSE C. OSGOOD, of Troy, N. Y.—*Improved Machinery for Excavating Rock.*—Patent dated February 17, 1857.—The chisel A is attached to a head B, which guides it up and down on ways C C, and is raised and let fall by means of monkey D. The head B contains an India rubber or other elastic packing E, against which the upper end of the chisel rests, for the purpose of protecting the head from the concussions accompanying the operation of the chisel; the head of the chisel is made in the form of the frustrum of a cone inverted, which, in connexion with the attachment *m s u n*, allows the chisel to swing sideways in any direction.

Fig. 3 represents the whole chisel on a smaller scale.

Claim.—First. Excavating rock under water by means of the wedge-shaped chisel, whose length is greater than the depth of water, when operated in the manner specified.

Second. The spring head B, or its equivalent, in combination with the chisel, operating in the manner substantially as set forth.

Third. The arrangement of the spring S within the loop or strap *o* of the turn buckle, in combination with the sliding nut *u*, in the manner described.

No. 17,650.—CHARLES WILSON, of Springfield, Mass.—*Improved Machine for Excavating Tunnels.*—Patent dated June 23, 1857.—The nature of this invention will be understood by reference to the claim and engraving.

The inventor says: I do not claim a single set of one or more rotary disk cutters applied to a common revolving shaft, and made to pass across a stone and to take a succession of chips or cuts from it, essentially as represented and described.

I do not claim the drill W^1 Y^1 Y^1, as the same might be used by hand, or in any other machine, and becomes a separate invention that may hereafter be secured by letters patent.

I *claim*, first, forming grooves in stone, or other mineral substance, by means of rolling disk cutters c c^3 e^4 d^2 d^3 on axes, set in alternate

opposite directions, and acting substantially as and for the purposes specified.

Second. Arranging a series of rolling disk cutters, revolving in such a manner as to cut a deep annular groove into the rock, substantially as specified.

Third. The arrangement of the scoops A^2 and buckets B^2, in combination with the cylindrical wheel I and rotary cutters, to free the annular groove of the chips and dirt abraded by said cutters, substantially as and for the purposes specified.

Fourth. A bed-plate G, secured in place by the jackscrews L^2 M^2, or their equivalents, in combination with a sliding-frame F, or its equivalent, projected as the cutting progresses by means of a screw K acting the fixed and moving parts, substantially as and for the purposes specified.

No. 17,174.—Samuel W. Soule, of St. Louis, Mo.—*Improved Excavator.*—Patent dated April 28, 1857.—As the cart is moved along, the scraper *e* will fill with earth until the lug *g* on the wheel *c*, in revolving, grapples with the lug *h*, thereby raising the scraper *e* over the body of the cart, and discharges therein, it being turned by lug j^1 and projection *k*. The lugs *g* and *k* now pass each other, and the scraper falls back to position again for filling it, it being arrested in its fall by rod *i*.

Claim.—The frame *d*, lever d^1, lugs *g h*, rod *i*, and pins or lugs *j* and j^1, and projection *k*, or their equivalents, for the purpose of mechanically operating a scraper, as described.

No. 17,669.—Curtius Colby, of Wilson, N. Y.—*Improved Earth Excavator.*—Patent dated June 30, 1857.—The desired height of the cutting edge of the scoop G is regulated by the dog W falling in between the teeth of wheel D, and said dog is operated by means of lever E. When the excavator is filled with earth, the wheels D and C are brought in gear by raising the lever F; and as the machine moves on, wheel D is turned, and chains Y raise the scoop into the position represented in figure 1, where it is retained by operating again levers E F. The load can now be taken to any desired place of deposit, and the earth is liberated by pressing the foot upon lever O. The excavator is caused to reassume its position for loading by pressing upon spring T, by which the lever E is depressed, undogging the wheel D, when the excavator is brought down by its own gravity.

The inventor says: I do not claim the mounting and using an excavator upon wheels; nor suspending its sides upon pivots or gudgeons; neither for escape of the earth by letting the bottom free; as I am aware of there being machines used with those principles.

Neither do I claim the method of elevating the excavator by the cog-wheels C and D acting upon the drums H H, or the chains attached thereto; nor the method of varying the direction of the machine by the tiller K.

But I *claim*, first, the use of the levers E and F, with their combination, for the purposes set forth.

Second. The suspending the arms S S to the frame at a point P

above the level of the top of the excavator, thus securing the elevation of the hind as well as the fore part at the same time.

Third. Causing the return of the bottom of the excavator to its proper position for reloading by means of the strap I and roller L, as described.

No. 17,306.—Wm. Kennish, of Brooklyn, N. Y., assignor to Andrew B. Gray, of San Diego, Cal.—*Improved Submarine Excavator.*—Patent dated May 12, 1857.—The receiver A being at the bottom of the river or harbor, the mud, stones, &c., are rushing up pipe B into chamber 9, the air which was previously there having nearly all passed up through hose H, and cocks R and P, into the vacuous space N. When the chamber 9 is charged with material to be lifted, the cock R is turned off, and the cocks G and S are opened, thus forming a communication between the chamber 8 and cylinder M. The cock *a* is then turned on, admitting steam into M, forcing the included air into the chamber 8, until the water previously there is expelled through the holes *z*, when the receiver A rises to the surface of the water. The excavator is then towed to the place where the material is to be deposited; and having arrived there, the weights 7 are elevated by means of chains F, when the weight of the material in chamber 9 opens the valves *c*, allowing the material to fall out, and the water to take its place.

The inventor says: 1st. I *claim* the combination and arrangement of the chambers 8 and 9, with their pipe B, valves C C, and weights 7 7, or of any equivalents thereof, for the purposes specified.

2d. I claim the arrangements of the cylinders N and M, with their pipes and hose, or the equivalents thereof, whereby the mud chamber 9 and floating chamber 8 are alternately filled with or emptied of air, as the means of collecting and floating off the excavated material.

I do not claim as new forming a vacuum by steam, as this has been done before.

Nor do I claim to be the first to use such vacuum for the purpose of excavation.

No. 16,397.—William Provines, of Columbia, Mo.—*Improvement in Excavators.*—Patent dated January 13, 1857.—As the machine is drawn along, rotary motion is imparted to the wheel L on shaft K, to the arms M, of which are attached the excavating cutters *a* and a^1, which are followed closely by the scoops O, so as to take up the earth loosened by said cutters. As the wheel L rotates, the trigger Q attached to a permanent brace P depresses the springs *d*, actuating rods *b*, and causing the scoops O to turn on their fulcra *c*.

Claim.—In combination with the scoops that cast their contents from them, the trigger Q and spring *d*, for the purpose of regulating the point at which the scoops shall divest themselves of their load, so as to raise it higher, or cast it further from the trench that is being cut, as described.

No. 18,185.—Ze Butt, of Lincolnton, N. C.—*Improvement in Excavators.*—Patent dated September 15, 1857.—By releasing the catch

e from ratchet O, the excavator D drops to the ground to receive its load, and in so doing, winds the rope *m* around the pulley K; as the horses attached to tongue *z* are moved forward, the excavator is filled; the horses are now detached from the tongue, and the hook *y* drops into ring S, and, by moving the horses a few steps forward, they will pull on rope *m*, thus turn pulley K, and elevate scraper D. To unload, the driver pulls rod F upward and forward, thereby raising catch *h*, and opening gate *i* to permit the load to drop out behind.

Claim.—The attaching the posts G G^1, in combination with the cross-bar *p*, resting upon the frame to the scoop itself by pivots or otherwise, for the purpose of bearing and supporting it whilst loading and regulating the depth it is to enter the ground, and for taking the strain of the chains and windlass.

Again, I claim as my invention the elevation of the loaded excavator by horse power, in the manner described, or any other method substantially the same.

I likewise claim the arrangement and combination of the gate catch rod and lever, so that the gate can be opened and closed by the driver without his leaving his seat, substantially as shown and described.

No. 18,551.—GILBERT H. MOORE, of Rochester, New York.—*Improved Rotary Excavator.*—Patent dated November 3, 1857.—The action of this improved machine is as follows: The digging-wheel in the centre, being dropped on the ground, rolls forward, the points of the spades being pressed into the earth by its weight. The shield F fills the spades in consequence of its shape at the anterior part, and retains the earth upon the spades as they rise by its shape at the posterior part. The earth leaves the spades by its own gravity, and falls upon the apron or inclined plane P P, and is thereby conveyed into the carriers B B. When a sufficient quantity has been loaded, the centre or digging-wheel is relieved from its work by elevating the crank C by a lever or other power. The earth is emptied from the carriers or receivers by pressing the levers A A at each end of said carriers towards the axle.

The inventor says: I *claim*, first, the construction of the carriers or receivers, as described, viz: the support and hinging of the bodies upon the axle in such a manner that they may be dumped by elevating the two extremities.

Second. The construction and mode of attaching the shield F by either of the methods, substantially as described.

Third. The combination of the digging-wheel, the carriers, and the shield, for the purposes set forth.

No. 17,692.—JAMES MOORE, of Pittsburg, Pennsylvania.—*Improved Fence.*—Patent dated June 30, 1857.—The nature of this invention will be understood by reference to the claim and engravings.

The inventor says: I do not claim the use of wire or other metallic wire as being new in the construction of fences.

But I *claim* the use of lozenge-formed slats B, and the alternate

twisting of the wires A between the slats, as herein described and for the purposes set forth.

No. 16,598.—G. R. McElroy, of Covington, Kentucky.—*Improved Fence, Adaptable to Uneven Ground.*—Patent dated February 10, 1857.

Claim.—The combination of the adjustable bar and oblique pin with an angularly braced panel and bearer, or any ordinary panel, as seen in figures 1 and 2, on which the angular or other bar may be supported, so that the panels may be moved sideways at the bottom, so as to bring them perpendicular upon uneven ground, and secured in that position by one or two adjustable bars or seats, substantially as described.

No. 16,369.—Seneca H. Bennett, of Belleville, Pa.—*Improved Field Fence.*—Patent dated January 13, 1857.—The posts *a* are secured in the sills *b* and the rails *h* are fastened in corresponding notches *k* of the posts *a*. The posts are secured to each other by means of the top rails *c*, which pass through mortises *d* in said posts.

Claim.—The combination posts, secured firmly in their places by the top rails of the fence being let into the mortises in the top of the posts, substantially as set forth.

No. 16,996.—Samuel Rains, of Lancaster county, Va.—*Improved Field Fence.*—Patent dated April 7, 1857.—The panels of this fence are fastened together by a tongue and groove connexion at the ends of the rails; and by having the ends of said rails fastened together by means of a key E, which has the shape of a drawing knife, and is provided with a sharp edge so as to enter the wood and hold fast thereto to prevent the panels from working or slipping.

Claim.—The making a fence without posts, when panels are fastened together in the manner described.

No. 18,858.—Thomas B. Page, of Laurel, Ohio.—*Improved Portable Field Fence.*—Patent dated December 15, 1857.—The object of this invention is to construct a portable fence that will stand vertically and firmly on unlevel ground. The engravings and claim more fully explain the nature of this invention.

Claim.—The base or chair, composed of two members C D and C D^1 in combination, substantially as described, with the panels A *a* B A^1 a^1 B^1 and link E *e*, or its equivalent.

No. 18,934.—H. F. Stanard, of Wayne, Mich.—*Improved Portable Field Fence.*—Patent dated December 22, 1857.—The claim and engravings explain the nature of this invention.

Claim.—Attaching or securing the fence to the ground, substantially as shown and described, to wit: by means of the inclined bars or braces D D attached to the posts, and connected by cross-ties E E, in connexion with the stakes F, provided with mortises and the wedges G.

No. 18,064.—WILLIAM PIERCE THOMAS, of Whitewater, Ind.—*Improved Fence for Poultry Yards.*—Patent dated August 25, 1857.—This invention consists in providing the upper portion of a fence with a swinging frame C D E F G, so poised that when a domestic fowl lights upon the bar, upon the side of approach, the swinging frame will turn in such a manner as to throw the fowl to the earth upon the same side from which it made the attempt to cross.

Claim.—First. The combination of the swinging frame C D E E F G with posts A A, in the manner and for the purposes set forth.

Second. The swinging board F, in combination with the swinging frame C D E E G, in the manner shown and described.

No. 17,514.—WILLIAM MORRISON, of Carlisle, Pa.—*Improved Portable Fence.*—Patent dated June 9, 1857.—The nature of this invention will be understood by reference to the claim and engravings.

Claim.—Confining the panels together, and also to the braces D and sill B, by means of a single bolt *d*, in the manner described.

No. 17,201.—EZRA COLE, of Fairfield, Mich.—*Improved Portable Field Fence.*—Patent dated May 5, 1857.—The nature of this invention will be understood by reference to the claim and engraving.

Claim.—The post B for use, in connexion with picket or panel sections C C of a fence, formed of two thin planks B^1 B^2; one of said planks being arranged on the one side of transverse sill A, and the other on the opposite side of the same, and one bearing, when the sections are locked together, against the inner face of one of the sections, and the other against the outer face of the adjoining section, substantially as and for the purposes set forth.

No. 17,302.—SETH G. TUFTS, of Mainville, Ohio.—*Improved Portable Field Fence.*—Patent dated May 12, 1857.—The coupling blocks G rest upon the chairs E, and the panels of the fence are secured together by means of wedges or pins *c* bearing against the fence post B.

Claim.—Supporting the panels vertically upon the coupling blocks G; also providing the chairs E with upright cleats *d*, all as described.

No. 16,486.—FRANK G. JOHNSON, of Brooklyn, N. Y.—*Improved Method of Constructing Fence Posts.*—Patent dated January 27, 1857.—The bricks *m n*, *m n*, (which form the posts of the fence,) have a common slot *o* to receive the key C that holds the rails *a a a* in place. By filling the mortises J with water, before the tenons J^1 enter, the mortar, by hardening, will firmly key one brick to another.

The inventor says: I do not claim the employment of the mixture of lime, gravel, and cobble stones in making posts, nor the mould or case in which to form the posts.

I *claim* the post B, formed and constructed as described, in combination with the keys C and rails *a a*, as described.

No. 16,406.—ODED SPENCER, of Jacksonburg, Ohio.—*Improved Bore or Support for Posts of Field Fences.*—Patent dated January 13,

1857.—The posts *c* are set in between the ties *b* b^1 and B B^1, and are thus firmly supported, independently of the rails *e*.

Claim.—The chair or base formed of the pieces *a* a^1, and ties or battens *b* b^1, B B^1, in the described combination with the posts, for the purposes explained.

No. 17,742.—SAMUEL F. JONES, of Milford, Ind.—*Improved Method of Connecting the Panels of Field Fences.*—Patent dated July 7, 1857.—The nature of this invention will be understood by reference to the claim and engravings.

The inventor says: I do not claim the brace, and bottom slat, and notch, as the same have before been known and used.

But I *claim* the method of connecting the panels of a field fence by tongues and grooves *g h* and hook *r r*, combined as set forth and shown.

No. 16,675.—C. P. GARLICK, of Minnesota Territory, and M. G. BLACKSTONE, of Mainville, Ohio.—*Improved Mode of Securing to each other the Panels of Field Fences.*—Patent dated February 17, 1857.—*a f*, *a f* represent the ends of two fence panels.

Claim.—The combined uses of the mortises S and wedges W W, in the chair *g*, when arranged with and used for connecting the lower part of the panels of the fence together, all as and for the purposes described.

No. 17,010.—WILLIAM S. FULLER, of Millbury, Mass., assignor to WILLIAM D. CUTLER, of Worcester, Mass.—*Improved Method of Constructing Iron Fences.*—Patent dated April 7, 1857.—The nature of this invention consists in making the pieces A with lugs B, or similar projections with a partial cavity on the back to fit on rods D, and then fitting the rings or collars *c* so as to embrace two adjacent lugs, and clasp them and the rod, the rods D being made with screws and nuts near the ends to retain the parts in place.

Claim.—The manner of connecting the pieces and rods together by means of the lugs and collars, when constructed and operating substantially as set forth.

No. 17,075.—WILLIAM B. BENNETT, of Lyons, N. Y.—*Improved Method of Clamping and Unclamping Panels of Portable Field Fences.*—Patent dated April 21, 1857.—The panels A of this fence are secured together by means of clamps D, which are formed with a hook *u* at one end, and with a button *e* at the other end; said button can be turned on its pivot and fastened to the clamp by inserting pin *i* into the oblique slot *o*, one half of which is formed in the button, and the other half in the clamp.

Claim.—The turn button clamp, or its equivalent, for connecting the trays of a portable fence, constructed, arranged, and operating substantially as set forth.

No. 18,952.—JOHN H. BRUEN, of Elmira, N. Y.—*Improved Method of Connecting the Panels of Portable Field Fences.*—Patent dated De-

cember 29, 1857.—The inventor, in describing his improvement, says: I construct a series of panels composed of inch boards of any convenient length and width, secured by being nailed to an upright or batten at each end, of two inches square, or thereabouts. A third may be nailed to the middle of the panel to stiffen it, or a strip of board will answer the same purpose. The end battens should project at the lower side a few inches, and may have a dovetail tenon cut upon them. A small strip of plank, having a corresponding dovetail mortise made through the centre, answers for a bed piece, and a strip of board C, figure 1, one inch by about five or six, and about four feet long, with a notch cut in one end, is required as a brace for each panel.

Claim.—The button *e*, in combination with the other devices described, for locking and securing the panels of field fences, in the manner set forth.

No. 17,210.—Isaac D. Garlick, of Lyons, N.Y.—*Improved Method of Uniting and Sustaining the Panels of Portable Field Fences.*—Patent dated May 5, 1857.—The panels composed of the boards *b* are secured to the posts *c d e f* f^1 in the respective positions represented in the drawings, the clamping piece *g* being secured to the bevelled surfaces of the posts *d c* in such a position that when a couple of panels are united to each other, said clamp will fit in between a couple of boards *b* at the end of the matching panel, and embrace the post *c*.

Claim.—My improved portable field fence, constructed substanstantially as represented and described.

No. 17,459.—Charles Van De Mark, of Oak's Corners, N. Y.—*Improved Method of Uniting the Panels of Portable Fences.*—Patent dated June 2, 1857.—The panels of this fence are locked together by inserting the piece *h* and projecting rails *g* through the opening of the next panel between the posts *c* and the board *d*, and swinging the panels round until the locking board *h* comes against the post *c*, and the locking board *d* against the post *a*, thus forming a zigzag fence, the locking boards *h* and *d* drawing tightly against the end post *c* and *a*.

Claim.—The end locking piece or board *h* combined with the locking board *d* and rails *e f* and *g*; the whole constructed and operating substantially as and for the purpose specified.

No. 18,301.—J. B. Reyman, of Bloomington, Ill.—*Improvement in the Construction of Wire Fences.*—Patent dated September 29, 1857.—The fence consists of two strands of wire *n n*, extending through its entire length, and supported at the ends and at intervals by common posts B. As the wires will be continually shortened when the pickets are being fastened on, it is necessary to provide a means whereby they may slacken as the occasion may require. This is accomplished by fastening the ends of the wire permanently to the post at the beginning, and extending them along the line of the fence, and fastening the other ends temporarily to a post by simply drawing them through holes bored for the purpose and driving pins loosely by their sides. The posts being set and the wires thus arranged are ready for fasten-

ing on the pickets. The pickets *a* are of the usual form and size, and have slanting notches cut across them near the ends for the reception of the wire; these slanting notches kink or bend the wires at their junction with the pickets, and prevent them slipping or sliding down the wires.

Claim.—What the inventor claims is, bending or kinking the wires by the means and in the manner and for the purpose described.

No. 17,335.—GEORGE W. MCGILL, of Buffalo, N. Y.—*Improved Approach-Opening Gate.*—Patent dated May 19, 1857.—When a vehicle approaches this gate, it passes on lever G, (being then the only one that is up,) which sinks, thereby drawing the rope C, and opening the gate. The vehicle then passes through, and drives on lever K, which has been raised by the sinking of lever G, which causes the gate to shut.

Claim.—The combination of levers G H I K, rack B, and cog-wheel A, as set forth and described, for operating a gate.

No. 18,283.—CHARLES A. HOWARD, of Pontiac, Mich.—*Improved Approach-Opening Gate.*—Patent dated September 29, 1857.—This invention consists in the peculiar arrangement of means employed for applying the power to the gate, said means being so connected with the parts for operating the latch or catch, that, as the latter is actuated and the gate set free, when in a closed state, the weight or spring is simultaneously set free and allowed to operate the gate.

In stating his claim the inventor says: I do not claim broadly the operating of the latch or catch by means of the weight of the vehicle as it approaches the gate, and also after it has passed through it.

Neither do I claim broadly the operating of the gate by means of a weight or spring.

But I *claim* applying the power of a weight or spring to the gate, through the medium of the crank shaft K, connecting rods *g g* and *f f*, in combination with the latch or catch D, arranged with the levers *r r* and bars S S, so as to operate conjointly, as and for the purpose specified.

No. 18,932.—C. W. SMART, of Watertown, N. Y.—*Improved Approach-Opening Farm Gate.*—Patent dated December 22, 1857.—This invention consists in combining the catch of the bolt F, which secures the gate in an open and closed state, with a spring E, which actuates the gate, the parts being so arranged that, as the catch bolt is withdrawn and the gate released, the spring will, by the same mechanism, be wound up and receive sufficient strength to actuate the gate.

The inventor says: I do not claim broadly the actuating of a bolt or catch, and the opening and closing of a gate automatically by the passing of the wheels of a vehicle over levers or projections to actuate mechanism arranged for the purpose, for various plans have been devised for effecting this object Nor do I claim the arrangement of levers and cords for withdrawing and then pulling open the gate, as in J. K. Webber's patent, 1855.

But I *claim* the combination of the slide bolt F and spring E,

arranged and actuated as shows, or in any equivalent way, so that, by the withdrawal of the slide bolt, the spring will be wound up or contracted, and have sufficient strength to throw open and close the gate by the time the bolt is fully withdrawn, and the gate released.

No. 16,978.—JAMES G. HUNT, of Cincinnati, Ohio.—*Improved Gate-Post, Attachable to any Panel of its Corresponding Field Fence.*—Patent dated April 7, 1857.—The arms B of the gate post A are inserted between the battens C and bars D of a fence, and secured therein by means of pins; the gate post being secured to the fence in this manner, the gate may be hung upon the hooks F.

Claim.—The application of a portable post to a fence, whether portable or permanent, when arranged substantially as described, for the purpose of hanging or fastening thereon a gate, as set forth.

No. 16,386.—ROYAL E. HOUSE, of Binghamton, N. Y.—*Improved Device by which Persons Approaching may Open Gates.*—Patent dated January 13, 1857.—In opening the gate, the pulling of the draught cord O or P towards the gate, causes shaft L to turn, and with it the cam arms *a b c d;* the cam arm *a b* being pressed against the respective end of the block *o p q r*, causing said block to recede from shaft L, and conveying with it the alternating rod R, which, by the connexions *v w* and *x*, fig. 2, opens the gate, the shaft L ascending the inclined plane on box *f*, by means of wheel *i*. By reversing the motion of the arms M N, the arms *e d* press against the respective sides of curved block *s t u*, reversing the motion of shaft K, and closing the gate; lowering the same as shaft L descends the inclined plane of box *f*, and thus bringing the bolt of the gate in connexion with a corresponding latch.

Claim.—The process, as described, for opening and closing road gates while riding on horseback, or in a vehicle, through the gate passage, and also the apparatus, arranged as described, for the purposes set forth.

No. 16,791.—DENNIS E. FENN, of Tallmadge, Ohio.—*Improved Devices for Raising or Lowering Farm Gates to allow them to Open over Obstacles.*—Patent dated March 10, 1857.

Claim.—The section H, with the slot *h*, spring J, stud *g*, section I, arm I^1, and the notched plate K, when arranged and operating substantially as described, for the purpose set forth.

Also, the slide E and pawl E^1, when combined, in the manner and for the purpose set forth.

No. 16,400.—ISAAC S. ROLAND, of West Earl, Pa.—*Improved Method of Hanging Farm Gates.*—Patent dated January 13, 1857.—The bracket pivots play loosely in the eyes of the hinges *a* and *h* of the gate, and the gate can thus be set into any desired inclined position; and the object of this invention consists in retaining said gate in any desired inclined position, which is accomplished by the arrangement of parts, as described in the claim.

Claim.—Constructing the upper hinge of said gate, of the pecu-

liarly shaped hinge arm *a*, the pawl *b*, and the cam *c*, when the said parts are combined and operated with each other, in connexion with the loose play of the bracket pivots in the eyes of the upper and lower hinge arms, substantially in the manner and for the purpose set forth.

No. 18,449.—THOMAS B. HAND, of Madison, Ind.—*Improved Mode of Closing Farm Gates.*—Patent dated October 20, 1857.—The inventor, in describing his improvement, says: I construct a platform or case P, on or in which is placed a horizontal or grooved pulley-wheel, as shown at A, around which, and over a vertical wheel D, works a cord or chain *c*, with a weight attached to one end W; the other end of the cord or chain is fastened to one end of the grooved brace B, the other end of the brace being attached by hinge or staple, as at *g*, to the gate or other object. The brace to be made of a length, and fastened to the gate at a point that will make the back end of the brace touch the fence, just so as to keep the gate from striking the machine.

The inventor says: I *claim* the application of the semi-grooved tangent brace or lever, with pulleys and weighted cord, for the closing of farm gates, and other similar purposes, (as in the several modes specified,) and in such a manner as to secure a great equality and permanency of force, and the amount of which can be regulated at pleasure, and using any material that will answer the purpose.

No. 17,699.—WILLIAM SHERWOOD, of Beloit, Wis.—*Improved Mode of Opening and Closing Farm Gates.*—Patent dated June 30, 1857.—The nature of this invention will be understood by reference to the claim and engravings.

Claim.—The use of the crank M^1 M^2, in combination with the latch N, or its equivalent, and the weight W, for the purpose of opening and shutting a sliding gate E^1, in which arrangement the gate E^1 is opened by one half revolution of the crank M^1 and shut by the other half revolution of the same; the latch N stopping the crank M^1 M^2 at the end of each half revolution, and the whole being set in motion by a weight W, which may be wound up when necessary, like the weight of a clock.

Also, the arrangement and combination of the lever Z, and the connecting rods Y^2, Y^3, with the two parts of the gate E^1 and E^2, by means of which one part of the gate E^1, when moving in one direction, opens or closes the other part of the gate E^2, by a corresponding motion at the same time in the opposite direction, as described.

No. 17,202.—SOLOMON COLE, of Rochester, N. Y.—*Improved Method of Opening and Closing Gates by Approaching Vehicles.*—Patent dated May 5, 1857.—As the vehicle passes over the piece *e*, the pin P under said piece is depressed, causing the bar *c* to turn on its fulcrum 3 and to raise the ends *f* of the ways W W^1, causing the gate to glide on their rollers *r* and thus to open; the reversed operation is performed by the vehicle passing over *m* by an arrangement similar to that represented at pin P^1, and compound levers *a b* of fulcra 4 and 5, which, on the depression of pin P^1, depress the ends *f* of the rails, causing the gates to close.

Claim.—The arrangement of levers *a b c*, and ways or rails W W^1, and tilting pins P^1, or *n* P, or *e d m*, whereby the gate is not only opened and kept open, but the tilting pins on the other side of the gate are placed in a proper position to tilt the rails and close the gate on the passage of a vehicle.

No. 18,308.—Francis Thrasher and Henry B. Horton, of Akron, O.—*Improved Method of Opening and Closing Vertico-lateral Folding Gates.*—Patent dated September 29, 1857.—In the drawings, fig. 1 represents the gate when closed; C and D are merely a pedestal to support A and B; E and F are the main bars fastened to the post B by pivots *d* and *e*, which may slide in the slots *j* and *i*. The slats G G are pivoted to the bars E and F, so that the gate may be raised and folded into the post B, as seen in fig. 2. By means of the weight N the whole gate is overbalanced and made to rise and remain up until it is drawn down by the hand placed upon the cord near the small weight S or T. When the gate is raised, the end of the upper rail E may move downward with its pivot *d* along the slot *j*; therefore, the whole weight of the gate rests upon the lower bar E and its pivot *e* in slot *i*. When the gate is shut down, the spring I, acting against the pivot *e*, pushes the bar F into a notch *c*, in fig. 3, in post A, so as to fasten the gate. In order to close the gate, either the cord Q or R is pulled so as to raise the quadrant plate K, thus closing the gate with the same cord by which it was opened.

The inventors say: We *claim*, 1st, balancing the gate upon a single fulcrum pin, whilst the gate is held to the post, and guided by another pin working in a slot, thus giving a steady motion to the gate in folding and unfolding.

2d. The eccentric quadrant plate K, by means of which the action of weight N, and also the action of the hand, (when pulling upon either of the cords Q or R,) are varied so as to easily set the gate in motion, and yet prevent the gate from opening or closing with violence, as described.

3d. The combination of the crooked lever *h* with the spring J and cords L Q and R, whereby a slight pull upon either of the cords Q and R will unlock the gate and let it fly open, whilst a stronger pull uponthe same cord will close the gate, as set forth.

No. 17,551.—James Bridge, of Augusta, Me.—*Improved Safety Attachment for Hatchways.*—Patent dated June 16, 1857.—By this device, the hatchway, when open, will be sufficiently guarded, and accidents will be avoided. When the doors B are closed, the guards C are thrown back against the under side of the doors by means of springs E and inclined flanches *f*.

Claim.—The guards or fenders C attached to the arbors D, which are secured to the underside of the doors B and connected with the flooring by the chains *b*; the above parts being used in connexion with the inclined flanches *f* and springs E, substantially as described for the purpose set forth.

No. 17,270.—DANIEL FITZGERALD, of New York, N. Y.—*Improved Mode of Constructing Portable Houses.*—Patent dated May 12, 1857.—In this construction of houses, the posts are made solid, and have channels cut into them to receive the weather-boarding and the door frames. F represents a section of the roof referred to in the claim.

Claim.—First. Uniting the roof in sections to render it portable, in the manner substantially as described.

Second. Cutting down a space in the sill, and tenoning each side so that the door frame will set close down and be held firm in the manner described.

No. 16,425.—JOHN G. VAUGHAN, mediate assignor to ISAAC M. SINGER.—*Improved Mode of Lathing and Plastering.*—Patent dated January 13, 1857.—The plastering entering the oblique interstices S of the laths O, thus forms a series of efficient ties to hold the coating applied to said laths.

The inventor says: I do not claim the sawing of laths, nor as limiting my claim of invention to making laths of the form specified by sawing, as they may be made otherwise than by sawing; nor to the making of such laths of wood, as other materials may be substituted, although I prefer wood.

Nor do I claim broadly the securing of plastering by dovetailed interstices between laths, or analogous devices.

But I *claim* plastering ceilings or other surfaces on lathing formed and secured so as to leave interstices between them with parallel sides oblique to the surface of the plastering, when put on substantially as and for the purpose specified.

No. 16,702.—WILLIAM E. WORTHEN, of New York, N. Y.—*Improved Metallic Lathing.*—Patent dated February 24, 1857.—The corrugated beams *a a* are pierced in the folds thereof so as to leave free small tongues *t*, which are afterwards bent horizontally, and at the same time dished or concaved, so as to make them stronger. These tongues will then serve as studding and lathing.

The inventor says: I know that corrugated iron has been used for floors; it is also employed for partitions, but it is, as far as I know, lathed either with iron or wooden laths riveted on. I know also that iron lathing, having a section like a C, and other sorts of iron lathing, have been used. I therefore claim none of these as my invention.

But I *claim* corrugated metal provided with tongues slit out of the body thereof, and bent away from their original position, substantially as specified, and constituting, as a whole, an article to be used in building, substantially in the manner and for the purpose set forth.

I also claim such tongues formed substantially in such a manner, on and out of corrugated metal, when they are dished or concaved, substantially in the manner and for the purposes described.

No. 17,550.—JOHN L. BRABYN, of New York, N. Y.—*Improvement in Laths for Buildings.*—Patent dated June 16, 1857.—The nature of this invention will be understood by reference to the claim and engravings.

Claim.—The forming of the interstices in the form of a dovetail, or its equivalent, and the back support for the mortar in the laths themselves, and entirely independent of anything that may be placed behind them, by grooving one or both edges of the lath on one side, and leaving the other side the full width, so that when the same are in place their edges shall join at the back side, to prevent the plastering material from pressing through between the laths, the grooves forming the clinches to hold the mortar firmly in place, substantially as set forth.

No. 18,555.—SAMUEL J. SEELEY, of New York, N. Y.—*Improvement in Canal Lock Gates.*—Patent dated November 3, 1857.—The claim and engravings show the nature of this invention.

The inventor says: I do not wish to be understood as limiting my claim of invention to the special form specified, but claim the privilege of modifying the same so long as I attain the same end by means substantially the same.

I *claim* the method, substantially as specified, of connecting the upper journals of canal lock gates to the masonry of the lock, by means of adjustable boxes, and for the purpose specified.

I also claim suspending the outer or swing edges of the gate to the upper journal boxes by diagonal suspension braces, in the manner and for the purpose as specified.

I also claim connecting the top flaps of the gate with each other, so that the two shall move together by means of a joint link and arm, or other equivalent means, substantially as described, in combination with the connexion with a capstan at the side of the lock by a jointed rack, or other equivalent means, as described, and for the purpose set forth.

No. 17,065.—EDMUND M. IVENS, of Tamaqua, Pa., assignor to Himself and LUCIEN H. ALLEN, of the same place.—*Improvement in Winding Machinery for Mines.*—Patent dated April 14, 1857.—Motion being imparted to the bevel wheels A and A[1] by a pinion on driving-shaft D, the rollers J on the arms K of the bevel wheels come in contact with the ribs L, on the inner circumference of the drums H and H, causing said drums to revolve in opposite directions at the same time that they move on shaft B in opposite directions, whereby the position of the unwinding part of the rope R is maintained stationary.

The inventor says: I am aware that rotating drums have been made to travel laterally by means of a screw around their axis. This, therefore, I do not claim.

But I *claim* the arrangement of the travelling drums on concentric axes, when operated in the manner and for the purposes substantially as described.

I also claim rotating the travelling drums by means of the rollers J and ribs or guides L, arranged at or near their inner periphery, or in any equivalent manner, whereby their hubs and axes are used merely as guides, as set forth.

load upon the block, the confined air will tend to resist the depression of the block.

The inventor says: I do not claim securing plates together by means of dowels and channels, or strips or bars, and grooves to receive them.

But I *claim* the mode set forth of locking the plates or blocks of iron pavements, the same consisting of the locking bar *e* and grooves *d d*, one of which is of sufficient depth to cover the entire width of the bar *e*, while the other is of half that depth; and in combination therewith, I claim the grooves *s* and *m*, in the manner and for the purposes set forth.

No. 16,490.—CHARLES T. LIERNUR, of Mobile, Ala.—*Improvement in Compound Rail for Railroads.*—Patent dated January 27, 1857.—The nature of this invention will be understood from the claim and the engravings. H represents a section of car-wheel, showing its position on the rail.

The inventor says: I am aware that a great many "two-part" compound rails have been designed and brought into use, more or less resembling my improvement; but none have the merit of such great simplicity of combination and ease of manufacture, or of application and removal, nor have they the material so advantageously disposed. I do not claim the employment of a two-part rail with unbroken top and bottom, and with the division effected principally through the middle web.

I *claim* the combination of a two-part compound rail for railroads, in which the head of the top rail and the lower flange of the bottom rail are each left undivided, the head of the top rail not resting on the upper part of the vertical rib B of the bottom rail, but supported alone by its own vertical rib in such a manner that the upper part A of the vertical B of the bottom rail can be used as a temporary rail during track laying, so that no deterioration resulting therefrom shall prevent the well fitting of both rails, and thus also giving to the top rail a support unaffected by the variations of dimensions occurring in the process of manufacture, through the rapid wearing of the rollers and the unequal heating of the iron.

No. 16,605.—SAMUEL NICOLSON, of Boston, Mass.—*Improvement in Rail for Street Railroads.*—Patent dated February 10, 1857.

Claim.—The street rail, constructed essentially as described, or with recesses *k k l l* in its side or sides, for the reception of the paving blocks B, each recess of one side being opposite either a recess of the other side or space, between two recesses of the other side essentially as explained.

No. 17,478.—LYMAN BEEBE & GEORGE F. SMITH, of Michigan City, Ind.—*Improved Machine for Repairing Railroad Cars.*—Patent dated June 9, 1857.—The nature of this invention will be understood by reference to the claim and engraving.

Claim.—The wedge-shaped jaws C fitted to the iron E, to be worked in combination with the iron bed block B fitted to receive them, into which they slide, and by which they are firmly held.

Also, the two jaws C, in combination with the double levers D, in which they rest, and by which they are readily opened by raising to receive and discharge the rails.

No. 17,178.—CORYDON WINCH, of Jersey City, N. J.—*Improvement in Railroad Chair Machines.*—Patent dated April 28, 1857.—The bar Y, being properly heated, is passed through opening *f*; motion being given to shaft K, cam N raises die E, and knives *e* and *g* cut the blank, which is then grasped between plate C and face of die E. Cam G now depresses die D, and cutters *b* cut and bend down lip *a**, as represented in figure 2; and cams *o* raising bars Q, the upper ends of the latter bend the lips *a** inward, as represented in figure 3, compressing the metal in such a manner as to make the angles b^1 thicker than any other portion of the chair.

The inventor says: I am aware that a number of machines have been devised for making railroad chairs from wrought iron; and dies operated by cams, or their equivalents, have been used and arranged in various ways in connexion with cutters, benders, &c. I therefore do not claim separately, or in itself considered, either of the parts described, irrespective of the peculiar construction and arrangement of the same.

But I *claim* the two bending and upsetting arms or bars Q Q, having their upper surfaces made inclined, and provided with ledges or flanches *k k* at their inner edges, the bars being operated or moved as shown and described, so as to both bend and upset the lips *a*, and thereby increase the thickness and consequently the strength of the lips where most required, viz., at the junction of the lips with the plate or base of the chair.

No. 18,023.—EDWARD W. STEPHENS & RICHARD JENKINS, of Covington, Ky.—*Improvement in Railroad Rail.*—Patent dated August 18, 1857.—The successive stages of formation of this rail by means of suitable rolls are represented in figure 2.

The inventors say: We are aware that it has been proposed to construct railway rails by bending the sides of a U-rail in such manner as to nearly or quite meet at the base, as in the English patent of T. A. Kinder, No. 2730, 1853, and do not wish to be understood as claiming any devices where the sides remain unwelded, an essential feature of our invention being the formation of an entire and complete T-rail web.

We *claim* the tubular T railroad rail, constructed in form and manner substantially as herein set forth; that is to say, having the two portions of its web welded together at the neck, and branching to the outer and inner edges, respectively, of the tread or track of the rail.

No. 17,580.—S. Y. LUDLUM, of Oyster Bay, N. Y.—*Improvement in Railroad Snow Excavators.*—Patent dated June 16, 1857.—The truck A is placed in front of the locomotive, and is shoved along by it; and when the box F is filled with snow, the locomotive is reversed; and, as it is moved back, the cord *r* will depress the slide E, and rod

D will be elevated within the frame *d*, as represented in figure 2, and pass up to the upper end of the box F, and by this motion detach the snow which is within the box F from that which is without. The rope *r* which is attached to the locomotive will now elevate box F; and when said box has reached a certain point, the end of catch *n* will strike against pin *b**, and the end of box F will strike against projection *c**. By this means the side *o* of the box will open, and the box will be tilted, as shown in figure 3, and its contents will be discharged at one side of the track.

Claim.—The tilting box or scoop F, attached to the sliding frame B, and provided with the rod or cutter D and hinge sides *o*, one or both; the frame being attached to the truck A, and the box F and rod or cutter D operated by the locomotive through the medium of the cord or chain *r*; the whole being arranged substantially as described for the purpose set forth.

No. 17,492.—WILLIAM L. CAWTHRON, of Harper's Ferry, Va.—*Railroad Switch Lock.*—Patent dated June 9, 1857.—The switch lever B is confined against the post P, and the lip *f* of the arm A passes through plate L and receives the bolt of a lock by which the arm A can be locked or unlocked; when the arm A is released from the bolt, it can be swung back, leaving lever B free to drop.

Claim.—The arrangement upon the lock plate of the curved securing-arm A, constructed and operating as described for the purpose specified.

No. 16,898.—HIRAM CARPENTER, of New York, N. Y., assignor to the AMERICAN IRON RAILWAY COMPANY.—*Improvement in Railroads.*—Patent dated March 24, 1857.—The claim and engravings show the nature of this invention.

The inventor says: I am aware a cast iron cross tie, with chairs attached, is not new; nor are cast iron pedestals new; nor is the interposition of an elastic material between the rails and their supports new. All these things have been essayed in some separate form or other, and I do not claim them separately.

I *claim*, in combination with the tie and pedestals cast in one piece, the chairs so constructed as to fit in or on said pedestals, and to hold the rails without the use of bolts, spikes, or keys, substantially as described.

No. 18,144.—RICHARD B. HARRISON, of Vicksburg, Miss.—*Improved Machine for Ramming under the Cross-ties of Railroads.*—Patent dated September 8, 1857.—The nature of this invention will be understood by reference to the claim and engravings.

Claim.—The movable machine for ramming earthy matter under the cross-ties of railroads, said machine being composed of reciprocating rams *c* and suitable actuating levers E, combined with a platform car A, substantially as set forth.

No. 16,623.—JOEL WISNER, of Aurora, N. Y.—*Improvement in Locomotive Cow-catchers for Railroads.*—Patent dated February 10,

1857.—This invention consists in placing over and attached to the common cow-catcher a heavy bar B operated by springs D D, the bar to be supported by the knuckle-jointed arms I H, the latter H being hinged to the cow-catcher at L. Should any animal come into contact with the arms, the knuckle-joint will give way, and allow the bar to fall and hold the animal until removed.

Claim.—First. The bar or jaw B, legs G, feet J, and teeth C, when operated by the springs D, or their equivalents, in combination with the forward end beam of the locomotive.

Second. The stud H and joint I, in combination with the bar B, when constructed and operated substantially in the manner and for the purposes described.

No. 16,343.—ANDREW TEAL, of Aurora, Ill.—*Improvement in Metallic Cross-ties and Chairs for Railroads as a new Manufacture.*—Patent dated January 6, 1857.—The nature of this invention will be understood by reference to the claim and engraving.

Claim.—As a new manufacture, my improved adjustable double chair for supporting the rails of railways, and at the same time securing said rails in any position, the said double chair being composed of T-shaped metallic rails *a* of a suitable length, combined with duplicate pairs of transversely grooved clamping blocks *c*, substantially as set forth.

No. 16,376.—JOSEPH T. DAVENPORT, of Augusta, Ga.—*Arrangement of Fixed Rails as a substitute for Railroad Switches.*—Patent dated January 13, 1857.—The train to enter sideling A will advance on the main track $c\ c^1$, in the direction of arrow 1, until the last car has passed the guard *o o o*. The train will then back, when the guard *o o o* acting upon the wheels will cause the train to move in the direction of arrow 2 till the engine has passed guard-rail *o o*, and then advance; the guard-rail *o o* will cause the train to enter the sideling A A.

Claim.—I *claim* the arrangement and form of the rails and guards to produce the described connexion between the sidelings and the main track on railroads, and for the purpose described.

No. 18,494.—SIDNEY A. BEERS, of Brooklyn, N. Y.—*Improvement in the Construction of Railways.*—Patent dated October 27, 1857.—This invention relates to the construction of railways with a cast iron foundation rail, of the form of a series of upright arches, resting on stone foundations, and tied together laterally by upright iron ties, and with a wrought iron coping rail fitting on to top of said foundation rail, and extending downwards on each side thereof, terminating at the bottom in flanges to receive clamps which are held and tightened upon said flanges, and caused to confine the coping rail to the foundation rail by means of keys, or their equivalents; the said coping rail breaking joint with the foundation rail, so as to form a continuously connected track, and having lock-joints of such form and construction that the adjacent ends of two lengths of rail cannot rise independently of each other, and that the breaks in the face of the

track, at the junction of the several lengths of rail, are oblique, and not directly across the face of the rail.

The inventor says: I do not claim the several parts or devices separately, as set forth, but in combination.

But I *claim* the construction of a continuous iron rail of successive sections of upright arches, the upper surface of which shall form a plane, and held in position by upright iron ties, with tenon and wedge or keys on the outside, and surmounted and bound together by a wrought iron rail, which last mentioned rail is held in place by hooks and key-wedges, or their equivalents, as set forth.

No. 18,577.—TIMOTHY DWIGHT, of New Haven, Conn.—*Improvement in Rails for Railways.*—Patent dated November 10, 1857.—In the engravings, *c* represents the cross-ties, *s* the sills, *r* the rails, *b* the bolts, *t* the tongue or rib of the sills, *i* the iron support, *f* the flanches of the rail, and f^1 the enlarged groove on the inside of the track By thus making room in the sill for the flanch of the wheel, this flanch will work against the flanch of the rail. The object of this invention is to add strength and permanence to the T-rail track, at a diminished price.

Claim.—The rail with its flanch or flanches, in combination with the sill adapted to fit the lower part of the rail, as described; and these I also claim in combination with the screw-bolt and nut, as described.

No. 17,003 —GEORGE W. THOMAS, of Wickford, R. I.—*Improved Road-Scraper.*—Patent dated April 7, 1857.—The nature of this invention will be understood by reference to the claim and engravings.

Claim.—The adjustable side scrapers E, in combination with the front release scrapers B, when so arranged as to throw the dirt inwardly towards the centre of the road, and in a crowning form, for the purpose of giving a natural drainage to the road, as set forth.

No. 16,963.—CHAUNCEY BLAKESLEE, of Ashtabula, Ohio.—*Improved Road-Scraper.*—Patent dated April 7, 1857.—The adjustable blade F may be set so as to take more or less earth, according to the nature of the soil, by means of the set screw *a*. In ditching, the sides or runners A may move along on the sod, while the blade F is so set as to excavate the earth between the sides.

Claim.—The grading blade F, arranged as described, and combined with the runners A A, with the draught forward of the edge of the blade; for the purpose of causing said runners to serve as guides or gauges thereto, and preventing the blade from dropping into furrows or depressions, substantially in the manner and for the purpose set forth.

No. 17,529.—HIRAM VAN PELT, of Bath, N. Y.—*Improved Road-Scraper.*—Patent dated June 9, 1857.—This scraper is drawn by power applied to chains E, the rings of which can slide on the rods C. After the scoop I of the scraper has been filled with earth, the scraper is thrown over and deposits its contents on the ground; the team is then changed to the rear end, and the other scoop I is filled.

The inventor says: I am aware that a scraper has been made to revolve upon pivots placed within a suitable frame, and therefore I do not claim such.

But I do *claim* the alternate arrangement of the scoops I I, in combination with the draught-rods D D, substantially in the manner and for the purpose set forth.

No. 16,767.—WILLIAM E. WORTHEN, of New York, N. Y.—*Improved Metaltic Roof.*—Patent dated March 3, 1857.

Claim.—A roof composed of U-shaped metallic beams *a*, which themselves are a portion of the covering, and of arching metallic plates *c*, plain or corrugated, connecting said beams, and composing the rest of the covering; the whole being constructed substantially in the manner described.

No. 18,278 —ROBERT T. HAVENS, of Casstown, Ohio.—*Improvement in Preparing Roofing Cements.*—Patent dated September 29, 1857.—The nature of this invention consists in combining coal tar and sand, sifted through a bolting cloth or other suitable material, with paper or wood in the following manner: The temperature of the tar is raised to a boiling heat, and then cooled, when an oily substance is found on the top, which is skimmed from the tar. To one gallon of tar thus prepared are added three gallons, or nearly in that proportion, of sand as aforesaid, prepared and stirred well together. Sheets of paper or very thin wood, in pieces of suitable size, are put into a rolling machine, which the inventor has prepared for the purpose; the mixture is poured into the hopper of said machine. The mixture and paper, or wood, are then passed together between the rollers of the machine, which is so contrived as to press the mixture upon and into the substance of the wood or paper on both sides.

The hopper is divided into three apartments E E and F. The mixture above described is poured into the compartments E E, and the wood or paper placed in F, the three apartments uniting just above the rollers C C; so that at this place of union the mixture shall come in contact with the wood or paper on each side thereof, before passing between the rollers C C. In turning the rollers, the mixture is pressed into the pores of the wood or into the paper on each side, making a smooth surface. The product passes from the press in the direction H.

The inventor says: I do not claim that the ingredients specified have not been used before in compositions, but do claim that they have not been so combined as to produce any article identical with, or equivalent or similar to the above.

I *claim* the process of combining and pressing coal tar and sand with paper or wood, in the manner described and represented for the production of an artificial slate.

No. 17,851.—JOHN B. WANDS, of Chicago, Ill.—*Improvement in Roofing Compositions.*—Patent dated July 21, 1857.—This composition consists of the following ingredients: One square foot of cotton is to be covered with a mixture of one pint of coal tar with one pint of clean sand, one gill of residuary gum, one-half of an ounce of litharge,

one ounce of water lime cement, one ounce of quick lime, and one half of an ounce of rosin.

Claim.—The combination of the various ingredients in the proportions before set forth.

No. 16,739.—CHARLES R. MILKS, of Detroit, Michigan.—*Improvement in Mastic Roofing Compounds.*—Patent dated March 3, 1857.—The compound consists of 20 gallons of coal tar, asphaltum as much as can be dissolved in 2 gallons of strong alcohol, raw India rubber as much as can be dissolved in 2 gallons purified spirits turpentine, 1½ gallon linseed oil boiled, 10 pounds pulverized soapstone, 5 pounds sugar of lead, one peck of plaster of Paris.

The inventor says: I am aware that most, if not all, of the articles named have been used in like compositions, and I am also aware that in some roof compositions heat has been applied to the articles separately, just before they have been put upon the roof.

I *claim* the composition for roofing, made up of the ingredients in the proportions and in the manner set forth.

No. 17,497.—J. B. DRISCOLE, of Knoxville, Tenn.—*Improvement in Roofing Machines*—Patent dated June 9, 1857.—In using this implement, the edge of the bar A is placed against the side of the higher bent edge *g* of the metal plates K, which are placed on the roof. The bar E is then drawn inward by operating its lever H, said bar pressing snugly against the shorter bent edge *h* of the adjoining plate K. The bar I is then turned over by moving handle J, and bends the upper part of edge *g* over the edge *h*, as represented in figure 2. Bar E is then moved outward, and bar I is turned around in its bearings till the upper bent portion of the edge is pressed snugly against the upper part of the edge *h* of the adjoining plate.

The inventor says: In view of G. W. Burling's patent, October 28, 1856, I disclaim the broad idea of folding the edges of metallic plates by means of a bar interposed between two parallel bars, one of which is movable.

I *claim* the employment of a swinging bar E hinged or swinging between the frame or side plates D D, in the manner and for the purposes substantially as described.

No. 18,186.—WILLIAM H. CARVER, of Covington, Ky., and J. BECKLEY, of Cincinnati, O.—*Improvement in Mastic Roofing.*—Patent dated September 15, 1857.—One thickness of dry roofing paper is laid on the sheating board, and on this one thickness of saturated paper; the tarred paper and canvas are to form a foundation for the cement. To this is applied a coat containing coal tar and quicklime, boiled together in the proportions of forty gallons of tar to twelve pounds of quicklime and six pounds of beeswax; the second coat applied contains the same ingredients as the first, with the addition of two and a half gallons of India rubber solution; the third coat contains the same ingredients as the second coat, and the addition of eight pounds of shellac solution.

The inventors say: We are aware that nearly all, if not all, the ingredients, composing our cement have been used, and therefore do not

wish to be understood as claiming any of them when taken separately, nor the whole of them when used together.

But we *claim* the precise manner employed of mixing and compounding the ingredients composing the cement, when combined with the proportions of ingredients as specified; by which process of mixing and compounding and combination of ingredients, and applying the cement to use, we are enabled to decompose or destroy the ammonia contained in the coal tar to prevent it from destroying the cement and eating the canvas on which it is spread, and at the same time produce a cement that is not brittle and subject to cracking, but hard enough to resist forces that roofs are generally subject to, and at the same time elastic enough to expand and contract to suit all conditions of heat and cold, and make the cement water-proof.

No. 17,883.—SAMUEL K. LIGHTER and JAMES A. MORRELL, of Hamilton, O.—*Improvement in Mastic Roofing Compositions.*—Patent dated July 28, 1857.—Twelve parts of linseed oil are put into a kettle and are heated to the boiling point; to this is added six parts of litharge and twelve parts of fire-proof mineral, together with twelve parts of yellow ochre; the mixture is well stirred until the whole is thoroughly melted. To this is then added three parts of beeswax, twelve parts of rosin, one hundred parts of coal tar, fifty parts of pitch tar; and the whole is stirred and fused together. To this is then added six parts of India rubber and six parts of gutta percha dissolved in spirits of turpentine, and six parts of gum shellac dissolved in alcohol; twelve parts of asphaltum are then added, and the mixture is then ready for use as a roofing composition.

Claim.—The roofing compositions described, composed of the several substances in substantially the proportions specified, prepared and used in the manner set forth.

No. 16,770.—NATHAN A. DYAR, assignor to Himself and SETH D. WOODBURY, of Lynn, Mass.—*Improvement in Mastic Roofing Materials.*—Patent dated March 3, 1857.—The mixture consists of thirty gallons of gas tar, one hundred and eighty pounds of yellow ochre, one gallon of whale oil, and fifty pounds of sulphuric acid. This mixture will produce an *elastic* body.

Claim.—The employment of sulphuric acid (or an acid having a similar effect) in the treatment of substances or compositions containing hydro-carbons, in the manner and for the purposes essentially as described.

No. 16,614.—BENJAMIN ROSS and JOHN C. CAMPBELL.—*Improved Metallic Roofing.*—Patent dated February 10, 1857.—The nature of this improvement will be understood from the engravings.

Claim.—The method described of connecting together metallic plates, or shingles for roofing, by their own weight, when the series of plates so connected are fastened only at the upper and lower edge of the roof.

No. 18,677.—JOHN B. CORNELL, of New York, N. Y.—*Improvement in Metallic Roofing for Subterranean Vaults.*—Patent dated Novembe

24, 1857.—The claim and engravings explain the nature of this invention.

The inventor says: I *claim* my improved metallic roofing for an apartment located under a sidewalk and a portion of a street carriage-way, the said roofing being constructed of the metallic beams G K L L L, the metallic sectional plates B B B, and the metallic plate C, in such a manner that the united inner surfaces of the said parts form the ceiling to said apartment, at the same time that the sectional plates B B B form an illuminating water-tight street sidewalk, and the plate C forms a safe support for the portion of the carriage-way immediately over said apartment, substantially as set forth.

I also claim the arrangement of my improved metallic roofing for subterranean apartments, which enables the beam G to serve as the main support of said roof, at the same time that the exposed portion thereof forms the street curb, substantially as set forth.

No. 17,874 —Lucian Fay, of Cincinnati, O.—*Improved Machine for Seaming Sheet Metal Roofs.*—Patent dated July 28, 1857.—The sheets being laid on the roof in the customary manner, the machine is taken to the ridge of the roof, and, being presented towards the eave with the rollers a a^1, confining between them the standing joint, fig. 3, the machine is allowed to travel down the roof until the standing joint engages between the burring rollers b b^1. The crank g being then rotated, the action of the rollers b b propels the machine forward, and at the same time turns the higher edge of the joint over to a right angle, as represented in fig. 4. The folding roller next bends it into the position shown in fig. 5, and the seaming rollers D D^1 then complete the single seam, as represented in fig. 6.

Claim —The use of the burring, folding, and seaming rollers b b^1 c D d D^1 d^1, constructed with or without adjustable elastic bearings, arranged substantially as described, in connexion with the movable platform or carriage, and operating in the manner specified.

No. 17,331.—Asa Johnson, of Cairo, N. Y., assignor to Himself and William Higbie & Henry Link, of Little Falls, N. Y.—*Improved Method of Fastening Sheet Metal on Roofs, &c.*—Patent dated May 19, 1857.—These studs, as represented in the engraving, are inserted in holes in the boards of the roof, which are made of such a size as to allow said studs to move when the metal expands or contracts. The metal sheet i is fastened to the studs by means of screws 1, and the studs are secured to the boards by means of screws S. The metal, as it expands or contracts, can move the block 2 on its shaft a, and said shaft is free to play in the groove b, thus affording a free motion in three directions.

Claim.—The self-adjusting fastener, as described, for the purpose of attaching metallic coverings to buildings, and accommodating itself to the contraction and expansion of the metal, and for fastening metals in any and all other places where the contraction and expansion demand accommodation, substantially as set forth, or any mechanical device equivalent thereto.

No. 18,703.—JOSEPH R. PAYSON, of Covington, Ky.—*Improved Arrangement in Sash Balance.*—Patent dated November 24, 1857.—The claim and engravings show the nature of this invention.

Claim.—I do not claim any of the parts or arrangements in themselves alone, separately considered.

But I *claim* combining the arrangement of cord *g* and pulleys *d d d d*, attached to the sides of balanced sashes *b c* and frame *a*, as shown, with the arrangement of the open weight or weighted tassel *e*, substantially as shown; by which means the sashes can be diversely operated in counterbalance with the weight, conjointly and separately as specified, and also by which means is furnished to the trade and the public a new economical and useful mode of counterbalancing sashes with one-fourth of the usual weight, and in the common plain frame without boxes, after the building is finished, without change in the frame or injury to the finish.

No. 18,223.—JOHN MCMURTRY, of Lexington, Ky., assignor to DANIEL WIEHL, of Fayette county, Ky.—*Improved Mode of Controlling Cog-Gear Sash Balance.*—Patent dated September 15, 1857.—When the gears are in the position represented in dotted lines, both sashes can be operated by turning knob J; by then drawing knob J to the position represented in full lines, the burr of plate F will be thrown between the belts of the pinion H, and will thus lock the sashes securely.

Claim.—Arranging the cog gears F^1 H^1 of the lower sash C^1 on the shaft G^1, which is capable of turning vertically and sliding horizontally, and which has arranged on its back end a locking plate I, which slides with it, but which cannot turn with it; said plate having a bar or cog *f* on its edge, which serves as a stop to hold both or either of the sashes in any desired position when geared together or separated, substantially as and for the purposes set forth.

No. 18,376.—NATHANIEL E. BAKER, of Holyoke, Mass.—*Improved Sash Supporter.*—Patent dated October 13, 1857.—This improvement relates to window-sash holders, in which friction is employed as a means for retaining the sash.

The object of the invention is to obviate the difficulties heretofore attending such devices, viz: the abrasion of either the sash or the window frame by undue friction, and the slipping down of the sash to an insufficiency thereof, caused by wear or otherwise.

The invention consists in having a clamp attached to one side of the sash, which clamp is made to sustain or hold the sash by grasping a cord which is placed within one of the jamb posts or stiles of the window frame.

The inventor says: I do not confine myself to any precise form of spring to be applied to the plates C D, nor to any precise material for the cord E.

I *claim* the clamp formed of the plates C D, attached to the sash B, in combination with the cord E, arranged substantially as and for the purpose set forth.

No. 18,275.—WILLIAM CROASDALE, of Hartsville, Pa —*Improvement in the Cribs of Horses' Stables.*—Patent dated September 29, 1857.—This improvement consists of a roller A, attached to the striker B by means of the screw or axle D, upon which it turns when seized by the animal; also, a striker B attached to the roller A, as above described, and also to the strap C by the pin F, upon which it freely turns. The strap C is firmly screwed to the crib. The striker B, at the point of connexion with the pin F, is shaped at an angle of about 120 degrees.

The operation of the machine is as follows: The roller A and striker B being in the position as shown by fig. 1, the roller A is seized by the animal, which causes it to turn upon axle D, and striker B upon the pin F, and throws up the striker B, the upper portion of which strikes the animal and causes him to relax his hold, the weight of the upper part of the striker being sufficient to cause it to fall back into the crib.

The inventor says: I *claim* the revolving roller A, in connexion with the striker B, as described.

No. 16,982.—JOSEPH B. LATHAM, of Phœnixville, Conn.—*Improved Arrangement of Staging Brackets.*—Patent dated April 7, 1857.—The nature of this invention will be understood by reference to the claim and engraving.

Claim.—The use or employment of the brackets E, the strap D, and dog B, substantially in the manner and for the purpose as set forth.

No. 16,380.—AUGUSTUS ELIAERS, of Boston, Mass.—*Improvement in Staircases.*—Patent dated January 13, 1857.—The nature of this invention will be understood by reference to the claim and engraving.

Claim.—The described improvement in the construction of staircases; the same consisting in forming separate and independent string pieces *c*, between which the treads *b* are held and griped, the whole being secured by a screw-bolt that forms a part of or is attached to the baluster, as set forth.

No. 18,110.—GEORGE S. STEWART, of Meadville, Pa —*Improvement in Instruments for Drawing the Curve of Circular Stair Railings.*—Patent dated September 1, 1857.—A detailed description of the operation of this instrument would take up too much space to be given here, the principal features thereof will be understood by reference to the claim and engravings.

Claim.—The construction of a machine with an adjustable table D C and the graduated post B, and arm T, adjusted with the set screws Q *i* and the semi-circle F, constructed as described; or any other substantially the same, and which will produce the same results.

No. 17,234.—CHARLES ROBINSON, of Cambridgeport, Mass.—*Improved Arrangement of Stairsteps.*—Patent dated May 5, 1857.—The nature of this invention will be understood by reference to the claim and engravings.

Claim.—Beneath each step a spring or springs, so as to give an elastic movement thereto in ascending and descending upon the stairs, for the purposes specified.

No. 16,357.—HENRY EDDY, of North Bridgewater, Mass.—*Improved Mode of Constructing Stalls for Horses.*—Patent dated January 6, 1857.—The hay rests between the inclined pieces H and the sides B, and the animal takes away the hay through the openings *p*, thus the head of the animal is protected from becoming soiled by the hay; the breath of the horse can escape through the openings I and O.

The inventor says: I claim nothing original in the construction of the main body of the stall, and nothing original in the combination of a deep crib or manger with an oblong hole for the insertion of the head and neck of the horse.

I *claim* a crib, or manger, with the inclined planes H H, constructed and arranged substantially as described.

Also, the space *g h k*, partially enclosed by the inclined planes H H, with a vertical opening I, substantially as described and for the purpose set forth.

No. 17,627 —WILLIAM L. JOHNSON, of Peytonsville, Tenn.—*Improved Mode of Constructing Stores.*—Patent dated June 23, 1857.—The nature of this invention will be understood by reference to the claim and engravings.

The inventor says: I am aware that stores or other buildings have been before constructed in such manner as that the fronts could be thrown open, being hinged at their sides as doors, and that the shelves, counters, &c., have been built on trucks running or resting on rails laid in the floor of the building, and do not wish to be understood as laying any claim thereto.

I *claim* constructing the fronts A A with rails *b* corresponding to those on the floor, and hinged or pivoted thereto, for the purpose of throwing down the said fronts in the plain of the floor, and forming a continuous road or track on which the trucks containing the counters, goods, &c., may be readily run out or clear of the building, as described.

No. 18,118.—ASA BLOOD, Sen., of Norfolk, Va , and ROBERT W. BROWN, of Washington, D. C.—*Improved Mode of Removing Stores, &c., in case of Fire.*—Patent dated September 1, 1857.—When the rod F is drawn back, owing to power applied to lever E, said rod slides freely through the hinged clinch H, the face of the spring I holding it at a perpendicular line while rod F is being drawn back. When lever E is raised, rod F is thrown forward, throwing clinch H in an angular position, causing it to clinch rod F, and the stalls and stores A B C are moved on their rollers J on the tracks O.

Claim.—We *claim* the manner described for moving the adjustable stalls by means of the lever E, rod F, and clinch H, on rollers J and track O, as set forth and described.

No. 16,563.—JASON S. WOOD, of Washington Township, N. J.—*Improved Stump Extractor.*—Patent dated February 3, 1857.—The chains H and I are respectively fastened to the levers F and G, which latter are operated by cams C and D. When the chain H has been pulled back to the full extent of the eccentricity of cam H, (see position represented in the figure,) then the slack chain I is to be unhooked, and its front end link is to be secured to the furthest link in the chain K to which it can be extended. Then the lever E is turned back, so as to cause cam D to push back lever G, and thereby to pull back chain I and K, leaving chain H slack, which latter is then to be attached to a further link in chain K. The lever E is then again turned, and so forth.

Claim.—The employment of the cams C C and D D, in combination with the levers F and G and the chains H and I, the whole being arranged substantially in the manner and for the purpose specified.

No. 17,528.—PETER TRAXLER, of Scottsburg, N. Y.—*Improved Stump Extractor.*—Patent dated June 9, 1857.—The operation of this apparatus is as follows: The chain, one end of which is secured to the stump, is fastened by its other end to the piece K. By raising the end E of lever *l*, said lever will turn on pin *e* as fulcrum, and end G will be depressed; this movement will raise bars *a* and *b* a certain height, and bar *a* can be secured in its position by inserting a pin *p* into the hole above bar B. By then reversing the motion of lever *l*, it will turn on pin e^1 as fulcrum, and bar *c* will be raised; and as bar *b* is also raised when bar *a* or *c* is elevated, said movement is imparted to the chain, which is secured to the stump to be extracted.

The inventor says: I *claim* the combination of the three bars *a b c*, with the slotted beam B and lever *l*, said beam B being free to revolve in the manner described.

I am aware of the construction of the lever of Lagrousse, and several modifications thereof, and do not claim the reciprocating lever thus used, but simply my combination, substantially as set forth.

No. 17,512.—E. T. MILLER, of Chelsea, Mass.—*Improved Machine for Felling Trees by Hand.*—Patent dated June 9, 1857.—This implement being attached to the tree in the manner represented in the engraving, the bar F is vibrated by hand, said bar working on pin *l*. At each vibration of the bar F, it strikes the ends of the bar *i*, alternately causing thereby the pawls *h*, in slide E, to feed the bar F towards the tree, and the cutters *n* and chisels *o* attached to the end of bar F cut down the tree I. When the tree is cut through, the operator, by pulling rope *g*, actuates the bars *f*, and withdraws the shoulders *e* from the lips *d* on the nuts *b*, thereby allowing the nuts *b* to move outward, causing the implement to be detached from the tree.

Claim.—The vibrating bar F, with cutter G attached, constructed as shown; the bar F being pivoted in the sliding collar E, provided with the pawls *h h*, and fited on the rack bar B, which is attached to the tree I, by means of the brace H and clamp formed of the screw rods

D passing through the nuts *p* attached to the segment bar A, and retained in proper position by the bars *f*, substantially as described, for the purpose set forth.

No. 18,383.—Ze Butt, of Lincolnton, N. C.—*Improved Arrangement of Self-Dumping Trucks.*—Patent dated October 13, 1857.—This invention is intended to be used in combination with the railway or inclined plane, for moving earth and other matter a short distance, and can be substituted for the common wheelbarrow in forming the earth bed for roads, and in loading carts, &c.

In the drawings, fig. 1 is a side view of the double inclined plane, showing the trucks at work thereon, throwing up the earth bed for a road, together with the ropes, pulleys, &c. At the top of the inclined plane is a pulley or pulleys, for the purpose of receiving the cord or cords attached to the trucks. C is a pulley attached to the outside of the shaft which supports the pulley e e^1; m is an endless chain or rope, which passes over pulleys C C; m^1 is a ring on endless rope or chain, for the purpose of attaching the horse, which, walking backward and forward alternately, raises and lowers the trucks B B; are the wheels of the truck which run upon the frame. E is the bail or loop to which the cord is fastened, which operates the trucks, and which, in the left-hand truck, has a latch or catch *g* attached thereto, which supports the front ends of the truck, and is here shown dumping its load; *f* is an adjusting loop or rod, for the purpose of opening the latch or catch, and thus dropping the front of the truck at any required point.

The inventor says: I *claim* as my invention the self-dumping trucks, as shown and described; also, the adjustable double inclined plane, with ropes, pulleys, &c., together forming an improved horse-run.

No. 16,579.—Reuben Comins, of Troy, N. Y.—*Improvement in Shoes for Truss-Frames.*—Patent dated February 10, 1857.—The object of this improvement is to prevent the end thrust of the diagonal braces on the bottom and top stringers of the frame.

Claim.—Furnishing that description of shoe D which, at the part where the braces B rest, is of an inverted T or angular or curved form, with two projecting plates E on its under side, which, in their horizontal section, are of T-form; said plates passing through the stringers A on each side of the vertical rods C, and thus forming an opening or jaws for the vertical rods to pass between, and extending down from the surface of the shoe, which rests upon the stringers, to the nuts and washers F upon the under side of the stringers, substantially as and for the purposes set forth.

No. 17,198.—John B. Cornell, of New York, N. Y.—*Improved Vault Cover.*—Patent dated May 5, 1857.—The object of the inclined position of the glasses in this vault cover is to cause the water falling upon it to run off freely.

Claim.—Arranging the respective glasses or tiers of glasses in an illuminating vault cover in inclined positions, to be the straight base of said cover, substantially as represented and described, and for the purposes set forth.

No. 17,199.—JOHN B. CORNELL, of New York, N. Y.—*Improvement in Vault Covers.*—Patent dated May 5, 1857.—The object of the gutters *c* is to receive and collect the moisture which condenses upon the under surface of the vault cover.

Claim.—Combining a series of gutters *c c* with the under surface of an illuminating vault cover, substantially in the manner and for the purpose set forth.

No. 17,096.—GEORGE R. JACKSON, of Rye, N. Y.—*Improvement in Vault Covers.*—Patent dated April 21, 1857.—The nature of this invention will be understood by reference to the claim and engraving.

Claim.—Combining glasses of an inverted pyramidal or polygonal form with the sash or metallic portion of an illuminating vault cover, or its equivalent, for the purpose of producing a wider and more perfect diffusion of the light which may pass through said cover into the apartment beneath, substantially as set forth.

No. 18,851.—GEORGE R. JACKSON, New York, N. Y.—*Improvement in Vault-Light Covers.*—Patent dated December 15, 1857.—The principal feature of novelty in this improved skylight consists in the peculiar shape of each of the glasses *b b* which form the illuminating portion thereof. This novel shape of each glass consists in giving to the concave under surface thereof the form of a hollow cone or pyramid, or the frustum of a hollow cone or pyramid, for the purpose of enabling the straight diagonal sides of the said concave surface to laterally refract and disperse the rays of light which pass through the same to the greatest possible degree.

Claim.—An improved manufacture, the described skylight, the essential feature of novelty therein consisting in combining with a metallic frame a series of glasses, whose upper surfaces are flat, or nearly so, whilst the under surface of each glass is in the form of a concavity whose sides are bounded by diagonally descending straight lines, or planes, substantially as set forth.

No. 17,613.—JOHN G. WOLVIN, of New York, N. Y., assignor to GEORGE PECKHAM and JOHN G. WOLVIN, aforesaid.—*Improved Ventilating Vault and Platform Light.*—Patent dated June 16, 1857.—The nature of this invention will be understood by reference to the claim and engravings.

The inventor says: I do not claim ventilating holes and a gutter for vault lights in itself, as these have before been used.

But I *claim* the manner specified of securing the glass sections in place, by the combined operation of the rebate 1 and clamping plate *f*, as specified.

I also claim the groove 3, in the flange 2, on which the glass rests, to retain a cord of India rubber or other elastic material, or cement, and make a tight joint with the glass, as specified.

I also claim the gutter 5, formed at the centre *c* of the radial bars *b*, in combination with the perforated clamping plate *f* and pipe *g*, as specified.

No. 16,451.—EMIL R. PICHLER, of Boston, Mass.—*Improvement in Reflectors for Vaults.*—Patent dated January 20, 1857.—This reflector consists of two glass plates *a* and *b*, each of which is formed with parallel single corrugations, the glass plates being fastened in the frame A in such a manner that the corrugations stand at right angles to each other, thus having the appearance of one single glass plate with double corrugations. The reflecting material is applied to the lower glass plate *b*; fig. 2 represents a section of the glass plates in line *x x*, and fig. 3 a section in line *y y*.

The inventor says: I am aware that glass plates with single corrugations have been used. I do not claim such plates.

But I *claim* the so arranging of the glass plates herein described, in a frame or frames, as to have the appearance and effect of double corrugations, when said plates are backed by any reflecting material, as set forth.

No. 17,097.—GEORGE R. JACKSON, of Rye, N. Y.—*Improved Method of Ventilating Vaults.*—Patent dated April 21, 1857.—The annular vault cover A is connected by means of the tube H, which is located beneath the paving of the side-walk of the street, with a ventilating lamp-post C, which excludes water, snow, and dust, from said vault.

Claim.—Connecting the aforesaid elevated recesses in the ceilings of subterranean apartments with ventilating lamp-posts, or with the flues of a building, substantially in the manner and for the purpose set forth.

No. 16,827.—GEORGE B. FIELD, of St. Louis, Mo., and BENJAMIN FIELD, of Beloit, Wis.—*Improved Mode of Veneering the Walls of Buildings.*—Patent dated March 17, 1857.

The inventors say: We are aware that veneering of walls and buildings with iron and stone plates, of itself, is not new; and we therefore do not claim it.

But we *claim* the mode or manner described of securing these thin plates of slate or marble to the walls and ceilings of buildings which have been previously built, meaning the combined arrangement of the strips of wood, cement, and screws, or the alternative method of the angle irons or window and door casings, pilasters, cornice string courses, or other ornamental attachments, combined with the cement, for the same purpose.

No. 16,548.—OTIS NEEDHAM and WALES NEEDHAM, of New Haven, Conn.—*Improvement in Boxes for Pise-Work Walls.*—Patent dated February 3, 1857.—The box is placed, with the lower edges of the plates *a* all on a level, upon the level surface or foundation prepared to receive the wall, the end nearest the bolt *c* being placed where the corner or end of the wall is to come. It is then filled with the composition of which the wall is to be made, the said composition being rammed continually, as the filling proceeds, to make the wall solid. When the box has been properly filled, the bolt *d* is slackened to allow the plate nearest to bolt *c* to be removed, so as to allow the box to be moved horizontally along the foundation (see dotted position in

fig. 2). When mouldings are to be made, an additional plate *m* is used, (see fig. 3,) of a projection equal to the thickness of the moulding, and the form of the moulding is cut out in the lower edge of plate *m*.

Claim.—First. The construction of the box with the movable end plates *b b*, fitting to grooves in the side plates *a a*, and with a roller *e* at one end near the top, and another *f* at the other end near the bottom, the one to run on the finished part of a course of work which is in progress, and the other on a finished course, or on the foundation of the wall, to guide the box in a horizontal line, while the plates keep it from deviating laterally from a straight line, substantially as specified.

Second. The plate *m*, applied and operating substantially as described, in combination with the other parts of the box, to produce window caps, mouldings, or other projections.

No. 17,937.—William S. Mayo, of New York, N. Y.—*Improved Window-Blind Slat-Holder.*—Patent dated August 4, 1857.—The arms of the piece B, embracing the lower end of the rod C, allow it to slide up and down freely, and hold it still with sufficient firmness in any required position.

The inventor says: I do not confine myself to the form here indicated; they may be made of many different forms.

But I *claim* the construction and application to the rods of window-blinds of springs or friction pieces of metal, to hold the slats in any given position, substantially after the manner and form indicated.

No. 18,569.—Thomas C. Ball, of Keene, N. H.—*Improved Device for Forming Round Tenons on Window-Blind Slats.*—Patent dated November 10, 1857.—Shoulder cutters K K K K are carried by and made to project from the two carriages C D, and to operate in connexion with the tubular sliding journal cutters L L, arranged as seen in the engravings, and supported in stationary poppet heads M M. To each of these latter cutters a longitudinal movement is given by means of a rod *a* and a crank-pin *b*, which connect the cutter with the adjacent lever F, and so that, by the movement of said lever in such manner as to cause the two carriages to approach one another, the cutter L shall be moved towards the journal cutters.

The inventor says: I do not claim the combination of machinery for pricking the staple holes and forming the journals and shoulders.

But I *claim* the arrangement and combination of sliding shoulder cutters, or their equivalents, and sliding tubular journal cutters, to operate together, substantially as specified.

No. 16,527.—Alexander M. Cochran, of New York, N. Y.—*Improvement in Window-Blinds.*—Patent dated February 3, 1857.

Claim.—1st. The fitting of the tenons in one side of the blind to oblique slotted mortises *b b*, and securing them all in place by a long rod or wire *d*, substantially as and for the purposes described.

2d. Effecting the connexion between the slats D D and rods E E, by making the rods of metal tubing with slits *s s*, providing ears *f f*

to enter the said slits *s s*, and passing a wire *g* through the tubular rods and the ears *f f*, substantially as and for the purpose specified.

3d. The confining of the slats in a closed or open condition by means of bail-shaped bars F F, applied and operating as described, in combination with notches *h i* in the backs of the rods E E, as set forth.

No. 16,632.—DANIEL KELLY and WILLIAM LIVINGSTON, of Grand Rapids, Michigan.—*Improved Window-Blinds.*—Patent dated February 10, 1857.

Claim.—Constructing the slats D, as shown, and having strips *e* attached to the stiles, as described; whereby the slats, when closed, will overlap and be flush with each other at each side, and the slats rendered perfectly weather-proof and the light excluded.

No. 17,938.—JAMES MCMACKIN, of New York, N. Y.—*Improved Device for Operating Window-Blinds.*—Patent dated August 4, 1857.—When this blind is to be opened, the cover *n* is raised by turning it on pivot *o*, and bar *c* is drawn out and turned in line with pieces *a b*, the projection *k* passing into slot *i*; the bar E is then pushed outward, as represented in dotted lines, which movement opens the blind A, turning it on its hinge C.

Claim.—The bar E, constructed of three pieces *a b c*, provided with the fastening formed of the slotted plate *f* on the piece *c*, and the ledge *k* on the piece *b*, the bar E being applied to the blind A, and fitted within the sill D, substantially as shown, for the purpose set forth.

No. 16,966.—SYLVANUS S. CLARK, of Manchester, N. H.—*Improvement in Folding Window-Blinds.*—Patent dated April 7, 1857.—The nature of this invention will be understood by reference to the claim and engraving.

Claim.—First. The employment of movable upright pieces E E, containing notches *c c* to receive and constitute bearings for the tenons of the blind slats, arranged to operate, substantially as described, within the stationary sides D D of the blind or shutter framing; for the purpose of confining the tenons of the slats when the blind or shutter is down, or of liberating the tenons to allow the blind or shutter to be drawn up or folded.

Second. The guide plates *x x*, for conducting the tenons of the bottom slat clear of the notches *c c* during the drawing up of the blind; such plates being attached to portions of the tenons of the said slat that extend beyond the ends of the tenons of the other slats into cavities that are made within the stationary side pieces of the blind, for the cords or chains *p p*, by which the blind is raised or folded, to work through, substantially as described.

Third. The construction of the chains G G, with stops *h h* on the links, arranged in such manner as to allow the links to fold freely inwards or away from the slats, and prevent them folding between the slats, substantially as described.

Fourth. The application of the spring *z* and cord *y* to the upper slat, substantially as described, in combination with the connexion of

the slats by the chains G G at their inner edges, for the purpose of effecting the closing of the slats when the blind or shutter is down, and keeping them closed, unless held open by other means.

Fifth. The suspension of the top slat from fixed pins *w w* in the cap of the frame of the blind or shutter, by slotted plates I I, of a form substantially as described, which admits of all the movements specified.

Sixth. The curved lever 16, and sliding ratchet bar 18, applied, as described, to operate upon the lower slat, and open the blind or shutter from the interior of the window.

Seventh. The hook J attached to the inner edge of one of the slats, and operating in combination with the spring *z* and cord *y*, to hold open the slats of the upper portion of the blind or shutter while the lower portion remains closed, substantially as described.

No. 17,922.—LUCIUS N. FAY and WILLIAM MASON, of Warren, Mass.—*Improved Mode of Opening and Closing Window-Blinds.*—Patent dated August 4, 1857.—The nature of this invention will be understood by reference to the claim and engravings.

The inventors say: We are aware that a worm-wheel and screw have been used for a similar purpose; but the operation of the screw is rather slow, and if a quick threaded screw is employed, considerable power is required to operate it. Our device operates the blind quickly, and not much power is required to operate it, as but little friction is created by the working parts.

We *claim* operating the blind A by means of the worm-wheel F and flanched plate I, arranged and applied to the blind and jamb-post substantially as shown, for the purpose specified.

We further claim attaching the worm-wheel F to the rod E, which is secured to the lower part of the blind and curved, as shown; whereby the gearing or wheel F, and flanched plate I, or any other device gearing into wheel F, may be perfectly protected from the weather and dust, in consequence of the rod E passing through the under side of the shell J, as described.

No. 17,923.—LUCIUS N. FAY and WILLIAM MASON, of Warren, Mass.—*Improved Device for Operating Slats of Window-Blinds.*—Patent dated August 4, 1857.—By sliding the knob B back and forth on rod *b*, the slat rod *d* will be moved up and down, thereby opening and closing the slats.

Claim.—The sliding head or knob B, placed on the guide rod *b*, which is attached to the cross-rail *a* of the blind, the head or knob being connected with the slat rod *d* by the rod *e*, the slat rod being braced or supported by a rod *f* attached to a rod *d* and the stile *g*, substantially as and for the purpose set forth.

No. 17,730.—JOSEPH B. DODGE, of St. Louis, Mo.—*Improved Box Window-Frame.*—Patent dated July 7, 1857.—The nature of this invention will be understood by reference to the claim and engravings.

The inventor says: I do not claim the balancing of sash by weights, pulleys, and box frame; and therefore I disclaim the original invention thereof.

Nor do I claim the substitution of grooving to form the box for the weights instead of framing, for framing was originally substituted for grooving in window-frames to form the box for the weights.

But I *claim* the employment of the beads commonly used in window-frames to hold the sash to their places, to form the box for the weights, using grooves for that purpose on the inside of the jamb and on the underside of the beads placed together, as shown at A A and B B, forms the box for the weights.

No. 18,611.—FRANCIS THRASHER and HENRY BISHOP HORTON, of Akron, Ohio.—*Improvement in Window-Sash.*—Patent dated November 10, 1857.—When the lever E is raised, the pin K is pushed up so as to strike the window-frame upon raising the sash to its full height, thus unlocking the strip D. The lower friction strip, figs. 1 and 4, has a spring F, which locks the sash down by entering a notch in the jamb casing. A projection upon this spring has a pin which enters the eccentric slot S in lever E, by which means the spring F and the friction strip itself are moved by the lever.

Claim.—The locking friction strip, for the purpose of raising the window with ease, and sustaining it at any height, substantially as set forth.

No. 18,200.—JOHN C. GRANT, of Salem, Mass.—*Improved Mode of Operating Window-Sash.*—Patent dated September 15, 1857.—As the sash is raised or lowered, the rack *i* attached to said sash operates the loose gear wheel *k* and wheel d^1; the pulley d^2 winds up cord *e* around this pulley, unwinding it from the larger pulley *d*; this, turning slower than pulley d^2, winds up spring *h*, which tends to force the window up, and sustains it at any point of elevation.

The inventor says: I do not claim balancing the sash by means of a spring, as that is not new.

But I *claim* combining with the window frame and sash the rack *i*, gears *k* d^1, pulleys *d* d^1, and spring *h*, all arranged and operating substantially as above set forth.

No. 18,182.—EDWARD T. BRIGGS, of Salem, Mass.—*Improved Mode of Sustaining Window-Sash.*—Patent dated September 15, 1857.—The support *b* is pressed by means of spring *c* against the sides *d* of the strip *g*, and thus it sustains the sash at any desired height.

Claim.—Furnishing the sash with the metal strip *g*, in combination with the angular grooved support *b* and spring *c*, in the manner and for the purpose set forth.

No. 16,559.—WILLIAM WEBSTER, of Morrisania, N. Y.—*Improved Mode of Hanging Window-Sashes.*—Patent dated February 3, 1857.—The object of the hole C in the face of the sash B is to admit of the knot made in the end of the cord. The hole and knot may be covered by a thin metal disk.

Claim.—The constructing of window sashes with holes *c c* on their inner face, in connexion with the holes and grooves G G, in the manner described.

No. 16,998.—D. ROHAN, of Cincinnati, O.—*Improved Mode of Arranging and Operating Window-Shutters.*—Patent dated April 7, 1857.—When the slide C and shutter D are shoved within the box B, the outer end of the shutter will be flush with the ledge *k*. When the shutter D is drawn out from the box B, the two bars E are drawn out with it to a certain distance; as the catches E[1] connect the slide C and bars E together, the bars E move outward with the slide until the weighted ends *f* are raised by the projecting surfaces *i* on the blocks *h*, by which motion the hooks *g* are thrown out of their recesses in the slide C. The shutter can now be elevated to cover the window A, and the bars E are shoved back within the box B.

Claim.—Attaching the lower end of the shutter D to the slide C, or its equivalent, which is fitted on the box B below the sill of the window casing A; the bars E E being used in connexion with the slide, and connected at the proper time to the slide by the catches E 1, which are actuated by the weights *f* and blocks *h*, substantially as described, for the purpose set forth.

X.—LAND CONVEYANCE.

No. 16,499.—ALFRED E. SMITH, of Bronxville, N. Y.—*Improvement in Axle-Boxes.*—Patent dated January 27, 1857.—In the accompanying drawings, *a* represents the hub, which is driven on to a metallic pipe-box *b*. The bore of this box is made to fit the arm *e* of the axle *f*. Between the ends *c* and *d*, the pipe-box is corrugated, or fluted, so as to leave the ribs and flutes *g* longitudinal, with the edges of the ribs inside to fit the arm of the axle, the grooves or flutes forming oil cells all around the arm of the axle to keep and distribute the oil.

Claim.—Making metallic pipe-boxes for carriage wheel hubs with the two ends cylindrical, or conical, to fit the arm of the axle; when these two sections are connected and combined with the intermediate part corrugated or fluted inside and outside, substantially as described, for the three-fold purpose of giving greater strength with a given weight of metal, to form a series of longitudinal oil cells all around the arm of the axle, and to form longitudinal ribs all around on the outside to enter the wood when driven in, that it may be effectually held and bound in the hub, substantially as set forth.

No. 16,661.—ALFRED E. SMITH, of Bronxville, N. Y.—*Improved Mode of Securing Hubs on Axles.*—Patent dated February, 17, 1857.

Claim.—The mode of securing the pipe-box and hub on the axle, by forming the inner end of the pipe-box with a flanch fitted to enter a recess in a collar fitted and secured into the inner end of the hub, substantially as described, when this is combined with a projecting collar on the axle and a loop ring on the axle, the collar on the hub being connected by turn buttons, or equivalents therefor, substantially as and for the purpose set forth.

No. 16,891.—JAMES M. WHITE, of Xenia, Ohio.—*Improved Mode of Attaching Hubs to Axles.*—Patent dated March 24, 1857.—The nature of this invention consists in a new device for attaching hubs to axles, with a view to secure attachment, being easily detached, running freely and easily; to prevent the pipe-box being jerked out of the hub as the wheel vibrates in towards and out from the cart or carriage body; to prevent the back of the hub cutting against and on the shoulder of the axle, and with a view of being easily repaired.

The inventor says: I *claim* the combination of the parts marked *a b c d e f g h i*, arranged as described and for the purposes set forth.

No. 17,063.—LORENZO WINSLOW, of Rochester, N. Y.—*Improved Mode of Attaching Hubs to Axles.*—Patent dated April 14, 1857.—The ring *a* is secured to the axle by means of pin P, and ring *b* is secured to the box by means of pins C; the axle may easily be secured in or detached from the box by inserting or withdrawing, respectively, pin P.

Claim.—The method described of attaching the boxes of carriages to the axles thereof, by means of a ring *a* and pin *p*, operating in combination with the ring *b* and pin or pins *c c*, in the manner set forth.

No. 17,247.—LEONARD J. WORDEN, of Utica, N. Y.—*Improved Mode of Securing Hubs to Axles.*—Patent dated May 5, 1857.—The nut A^1 is secured to skane A in the following manner: The nut A^1 is slipped over neck C, and then, by turning nut A^1 slightly, the eccentric curves *k* will bear against the curves of nut A, and thus secure the latter; the cap L is then screwed on in front by means of a screw passing into the tap G, in the end of the axle.

Claim.—Making on the front end of the skane or bush A a neck C of peculiar form, that is to say, having two or more parts of its periphery of a cylindrical shape, whilst the remaining parts are both cam-shaped and conical; when used in connexion with a nut A^1, whose internal periphery corresponds with the external periphery of the neck C, lock plate L, or its equivalent; the whole being arranged, constructed, and operating in the manner and for the purposes substantially as set forth.

No. 16,404.—ALFRED E. SMITH, of Bronxville, N. Y.—*Improved Mode of Constructing Mail-Axles and Hubs.*—Patent dated January 13, 1857.—The nature of this invention will be understood by reference to the claim and engraving.

Claim.—The described method of constructing a mail-axle, that is to say, making the end of the box *c* abut against the inner side of the collar, instead of against the holding plate, whereby the wear of the washer between the collar *a* and the holding plate may be compensated for by setting up the bolts substantially in the manner set forth.

No. 17,410.—THOMAS W. WILLIAMS, of Philadelphia, Pa., assignor to Himself and HENRY T. HOYT, of same place.—*Improvement in Securing Nuts on Axles.*—Patent dated May 26, 1857.—When the nut E is screwed up to its place, the lever key C is thrown into position rep-

resented in fig. 1, which prevents the nut from being unscrewed. To unscrew the nut E, the lever key *c* is turned to a horizontal position by entering a small iron pin through hole *h*, when the nut can be readily unscrewed.

Claim.—Securing nuts upon axles by means of the lever key *c* and the mortises or recesses *e* and *f*, the same being constructed and arranged so as to operate together in combination, substantially in the manner set forth.

No. 18,248.—George A. Prentiss, of Cambridge, Mass.—*Improvement in Journals of Axles with Friction Rollers.*—Patent dated September 22, 1857.—The nature of this invention consists in an addition to the common solid axle and friction rollers within the wheel, consisting of a separate securing journal, or steady pin, moving vertically so as to enable the bearing surfaces to run in contact, whatever may be the amount of wear.

In the engravings, A is a solid axle; B the wheels thereof; C the bearers or bearing rings of the axle; D the sets of friction rollers; and E the cylindrical recesses for the reception of the friction rollers, the said recesses being formed within the wheels, as shown.

The inventor says: I *claim* securing journals, applied to the solid axle and friction rollers.

No. 17,899.—John B. Slawson, of New Orleans, La.—*Improvement in Receiving-Boxes for Passengers' Fares.*—Patent dated July 28, 1857.—The apron *f* being in a horizontal position, the passenger drops his fare down through passage *e* of the glass plate *d*, which can be seen by the driver through glass plate *c*, who then pushes lever G backward, thereby turning shaft F and bringing apron *f* into an inclined position, by which the money is deposited in the sealed drawer I. Should the money deposited prove to be spurious, the driver raises the apron *f* to a vertical position, thereby exposing said money to the examination of the passenger.

Claim.—The method set forth of preventing fraud upon proprietors of public conveyances on the part of conductors, drivers, or passengers, by means of the plate or apron *f*, glass plates *c* and *d*, lever G, and drawer I, when arranged and operating in the manner substantially as and for the purposes described.

No. 18,715.—Alfred T. Toulmin, of Ellicott's Mills, Md.—*Improvement in Automatic Railroad Brake.*—Patent dated November 24, 1857.—The claim and engravings explain the nature of this invention.

The inventor says: I do not claim the application of brakes to railroad cars as new or novel.

Nor do I claim springs, or ratchet and cog-wheels, as new, in winding up the chain attached to brakes of railroad cars.

Neither do I claim as my invention the transmission of power derived from the revolution of the car or tender wheels.

But I *claim* the self-adjusting or self-regulating action of disengaging the revolving spring axle, about which the brake chain is wound up, from further contact with the motive or winding power, so

soon as the brakes are put down sufficiently to offer a great resistance to the progress of the cars, but before the braking point of the brake chain is reached; this disengaging being effected by means of the tension from the combination and connexion of a revolving spring axle on one end of the brake chain, and at the other end the resistance offered to the brakes by the revolution of the car wheel, substantially as described.

No. 18,516.—PHILANDER PERRY, of Troy, N. Y.—*Improvement in Operating Railroad Brakes.*—Patent dated October 27, 1857.—The claim and engravings show the nature of this invention.

The inventor says: I *claim* the use of the sets of nuts and screws, arranged upon the under side of the car body, worked by the hand wheel and chain, and operating upon the pairs of brake rubbers as described, for the purpose specified.

I also claim arranging springs R between the bottom of the car body and the brake rubbers, as described, so as to prevent jolting or jarring of the car body while its weight presses the brake rubbers upon the top of the car wheels, and also to facilitate the application of the brake rubbers, as specified.

No. 17,058.—RICHARD L. SMITH, of Philadelphia, Pa.—*Improvement in Railroad Car-Brake.*—Patent dated April 14, 1857.—When it is desirable to stop the train of cars as quickly as possible, the brakesman depresses rod S, and with it lever *g* and bar Q, bringing the pointed end of arm R in contact with the ground; and, consequently, arm R and rod T are forced suddenly back such a distance that the end of arm R may be freed from the ground by the action of roller *t* on arm S. This movement of rod T is communicated to rod U, sliding-rods J and I of each of the cars of the train, and to the bars H, the inclined planes of which act on the rollers *j* of shaft G in such a manner as to depress the same, and with it the hangers F and the rubbers E, thus bringing the latter to bear hard on the wheels D. When a slow stoppage of the train is required, the rod W is withdrawn from the bumper of the car by turning spindle *z*, when, on the retarding of the engine, the cars will, through their momentum, cause the ends of the sliding-rods J to be forced against the end of rod U, causing the sliding-bars throughout the train to move and the rubbers to bear upon the wheels.

The inventor says: I do not claim the employment of sliding-rods for causing a simultaneous braking of the wheels of the cars throughout the whole train; neither do I claim exclusively the use of inclined planes for operating the rubbers.

But I *claim* the sliding-rods I I and J J, with the bars H H having double inclined planes, in combination with the rollers *j j* and the rollers K K, when the latter are hung to the axles; the whole being arranged and constructed substantially in the manner and for the purpose set forth.

No. 18,018.—JAMES MITCHELL, of Osceola, Iowa.—*Improvement in Railroad Car-Brake.*—Patent dated August 18, 1857.—On the run-

ning of the cars from the track, and the disengaging of the coupling pin *v* of lever S, the collar *l* will be drawn against the upright arm of lever F, and the holding point *i* will release the chain *e*, and the shoes S^1 S^2 will fall upon the rails to the position represented in fig. 2, thereby arresting the motion of the car.

The inventor says: I do not claim the use of movable shoes, as stated.

Neither do I claim broadly the actuating of the braking apparatus by the removal of a detent.

But I *claim* the combination of the lever detent *f*, hooked rod *h*, adjustable collar *l*, standard *p*, rod *o*, slotted table *q*, and bent lever *s*, when said parts are arranged for joint operation with each other and with the shoe-suspending apparatus, substantially as set forth.

No. 18,150.—W. R. JACKSON, of Baltimore, Md.—*Improvement in Automatic Railroad Car-Brake.*—Patent dated September 8, 1857.—When the locomotive goes ahead, the coupling pin W is drawn to the forward part of slot X, and the lever N is drawn forward, and, by arm of levers N^1 and N^2, brings the toggle joint M to an angle, shortening spring L, which, through levers I H, takes the spread of cams E from the brake-blocks D, and, so long as the locomotive pulls, brakes are up; as soon as the speed of the locomotive is checked, the cars will crowd together, and the brakes will be applied.

The inventor says: The improved coupling described I do not claim under this application; as I have made a separate application, of even date herewith, for that part of the apparatus.

But I *claim* as my invention the mode described of controlling the action of the spring or springs which bring the brake-blocks to bear upon the tread of the wheels by the operation of the tractive force, or its suspension; so that the wheels shall be free when the vehicle is being drawn forward or backed, and the brakes applied by the momentum of the train when the tractive or the backing force is withdrawn.

No. 17,004.—ROBERT M. WADE, of Wadesville, Va.—*Improvement in Railroad Car-Brakes.*—Patent dated April 7, 1857.—By forcing down rod *l*, lever *k* is turned on its fulcrum, and the rod and wedge *i* are forced upwards, bringing rod *c* in gear with pinion *e*, which is secured to the shaft of pinion *d*. By now turning shaft *g*, the spring *s* is taken up. The strengthening of chain *c* causes the instantaneous application of all the rubbers *r* to the wheels.

The inventor says: I disclaim the application of the brake-rubbers by springs, and the drawing up of the springs by means of rack and pinion.

I *claim* the wedge *i*, lever *k*, and bar *l*, constructed, arranged, and operating substantially as described, in combination with the rack *c*, for the purposes specified.

Also, the aforesaid wedge, lever, and bar, in combination with the slack chain, for effecting the simultaneous application of the brake-rubbers throughout the train, substantially as set forth.

No. 17,257.—Louis Brauer, of Somerville, Tenn.—*Improvement in Bumper Railroad Car-Brakes.*—Patent dated May 12, 1857.—When the train is in motion, the flanges of two contiguous bumper heads are fastened together by means of a clamp *w*. If the train shall be braked it is only necessary to retard the velocity of the locomotive, when the bumper heads *a* of each car begin to press against each other, which pressure will be transmitted by the elastic hinge h^1 to the bar *d*, and from there to lever *g*, which, by the connexion of rods *l* and *k*, applies the brakes *i* to the wheels. When the train is set in motion, a reversed movement of these parts takes place, until the brakes *i* are arrested by stop-pieces *z*.

The inventor says: I lay no claim to the principle of operating railroad car brakes by means of the momentum inherent to cars when in motion.

Nor do I claim the use of an elastic substance for the purpose to diminish the effect of the push to which bumper heads are exposed when a train is stopped, as all this has been known before.

But I *claim* the sliding bumper *a f*, in connexion with clamp *w* and stop-piece Z, constructed and operating as described within.

2d. The elastic hinge h^1 within the tapering sleeve, operating as described and for the purpose set forth.

No. 17,983.—E. R. Roe, of Bloomington, Ill.—*Improvement in Mechanism for Operating Railroad Car-Brakes.*—Patent dated August 11, 1857.—By a rope attached to either of the arms *m* M, they can be moved in either direction. The cam Q causes pin U to press by its foot against the end of arm E, depressing it and the anchor F. The wheel C, as it revolves, brings pin G into contact with anchor F, and carries it around with it; thus drawing the pitman rod H a distance nearly equal to the diameter of the wheel C, and by means of the bent lever N, figure 2, pulling down the brakes W^1. When it is desired to let up the brakes, the rope attached to arm *m* is slackened, when arms *m* M return to their perpendicular position by means of their own weight. The action of cam P, in returning to the perpendicular, depresses the pin T, whose fingers detach the detent spring, and the action of rod H brings back the arm and anchor to their original position.

Claim.—The combination of the "anchor" F, in its connexion with the arm E and the pin G, and operated as described by the cams and pins, in connexion with the wheel C, in the manner described, and for the purpose described.

No. 17,763.—Ira J. Webber, of Salem, Mass.—*Improvement in Method of Applying Railroad Car-Brakes.*—Patent dated July 7, 1857.—The block frame A is attached to the under side of the car body of each car, the chains *b* and *c* being fastened to the brake levers of the forward car and rear car. By applying the brakes of the rear car the chain *c* is retracted, and with it spiral spring *c* and chains *d;* these latter throw the catches E into the position represented in figure 2, causing the bolt B to be locked; and, as the rear car is being checked, the brakes will be applied to the other cars by the pull on chain *b*

Claim.—The apparatus described, for the purpose of applying railroad car-brakes, consisting essentially of the sliding bolt B and the dogs E, or their equivalents, operating in the manner substantially as set forth.

No. 18,435.—HENRY M. COLLIER, of Binghamton, N. Y.—*Improvement in the Rubbers of Railroad Car-Brakes.*—Patent dated October 20, 1857.—The recess, as shown in engraving, has its sides cast of a dovetail or mitred form its entire length to confine the wooden rubber, as represented at X X in end plan. The back of this recess V V is cast solid, and of a circular form, corresponding with the periphery of the car wheel, which forms a support to the wooden shoe B^1, and serves to relieve the cap S and the end S^1 from the strain caused by the carrying tendency of the friction with the wheel in the direction of its motion.

The inventor says: I do not claim a metallic head or socket to hold a wooden shoe or rubber; nor a wooden shoe or rubber, presenting the end of grain or fibre as a friction surface; nor the scrapers *o o*; nor a dovetail for securing a removable piece, as heretofore used or described.

But I *claim* the serrated circular back V V of recess in B and the sliding cap S, as described and for the purposes set forth.

No. 18,990.—JOHN F. RAGUE, of Dubuque, Iowa.—*Improvement in Railroad Car-Coupling.*—Patent dated December 29, 1857.—This invention consists in the employment of a revolving hook E placed within the draw-head C D, and used in connexion with a buffer K, also placed within the draw-head.

The inventor says: I do not confine myself to any particular mode of operating or rotating the hooks E, for that may be done in various ways.

But I *claim* the rotating or revolving hook E, in combination with the buffers K; the above parts being placed within the draw-head, and arranged as shown for the purpose specified.

No. 18,132.—JOSEPH BOOTHROYD, of Michigan City, Ind.—*Improvement in Reversible Railroad Car-Coupling.*—Patent dated September 8, 1857.—The bell mouth A receives the coupling rod J, which is secured to it by means of pin O, which rests on lever B; the mouth A can be turned on shaft C, and will adjust itself to higher or lower cars by means of spring *m*.

The inventor says: I do not claim merely the arrangement for obtaining play in the coupling, nor do I claim coupling by the falling pin or latch.

But I *claim* the device, as described, by which my couplings revolve, so as to present either a bell mouth or a link, and at the same time admit of all necessary play to accommodate the motion of the cars.

No. 16,654.—JOSHUA C. PRICE, of New Philadelphia, Ohio.—*Improvement in Self-Disengaging Car-Coupling.*—Patent dated February 17, 1857.—The engraving represents a bottom view, in which A A

are the bottoms of two cars. If one of the cars runs off the track, (see dotted lines,) one of the head blocks or stop-bars G of one car will strike one of the other cars, and thereby cause the link F to slide over the bevel projections *c c* of the hinged bar D, and cause them and the bar to recede into recess E, (see dotted lines in fig. 3,) and consequently the pin H to rise sufficiently high to stand above the buffer head, and thus leave the latter free to pass out of its socket.

The inventor says: I am aware that sliding bars or bumpers have been used on either side of the platforms, for the purpose of disconnecting the car couplings. This I do not claim, nor the device for detaching the link by means of inclined or wedging surfaces for lifting out the coupling pin by an oblique strain upon the draw bar, as such a device was patented by James Turner, July 20, 1852.

But I *claim* the employment of two obliquely set sliding head blocks, or stop-bars, connected by a turning link or plate, which is hollowed out and bevelled inward on each of its edges; in combination with the hinged buffer pin plate, which is furnished with two outwardly bevelling projections on its under side; said parts being arranged relatively to the buffer head, and operating in the manner and for the purposes set forth.

No. 17,845.—WELLINGTON PROSSER, of Kendall, N. Y.—*Improvement in Railroad Car-Couplings.*—Patent dated July 21, 1857.—So long as the shackle bar H remains parallel with the jaws J, no force short of fracture will disengage it. But if it be slid to one side, as is the case when the engine or any car leaves the track, so that the head H can pass the ends *a* of the projections, it will instantly become disengaged.

The inventor says: I *claim* the combination of the jaws *j j*, hoop or band B, and link or shackle bar H, the whole being constructed and operated substantially as described.

It being understood that I do not claim the combination of the jaws *j j* with the link H alone, but the combination of these elements with the band B.

No. 17,796.—D. W. LONG, of Baltimore, Md.—*Seal for Car Doors, &c.*—Patent dated July 14, 1857.—The seal *a* is applied to the sliding door B and stile D, as represented in the engraving, and said seal is then covered by means of hollow hasp *b* to protect it from injury.

The inventor says: Though I have represented the same hasp that covers the seal as securing the doors, I do not confine my claim to this peculiar arrangement, as there may be other or additional locks for securing the doors; nor do I confine myself to the peculiar form of the hasp.

But I *claim* effectually securing the seals of car or other doors from accidental or designed injury, substantially as set forth.

No. 18,743.—GEORGE W. HART, of Aurora, Ind.—*Improvement in Dumping Car.*—Patent dated December 1, 1857.—The operation of this invention is as follows: The loaded car having been run forward

over the tender by means of the crank E, the dog P is elevated, and the hand wheel and pinion M N rotated in the direction of the arrow, fig. 1; the rack O carrying them towards the rear of the car, and with the reel J, which the attachment of the slat 1 causes to rotate in the direction of the arrow, in fig. 2. The slats are thus, one by one, disengaged from the lugs I, and wound on the reel, resulting in the discharge of the load, either in a body, or in such quantities, and at such speed, as may be desired. While this is taking place, the car may be shifted by means of the crank E, or the discharge may be at any moment arrested, and the car removed to another spot to deliver the load.

Claim.—In combination with the reel J, the slatted folding floor 1, 2, 3, 4, 5, 6, supported and operated in the manner set forth.

No. 18,961.—George Douglass, of Scranton, Pa.—*Improvement in Railroad Car or Carriage Springs.*—Patent dated December 29, 1857. The claim and engravings explain the nature of this invention.

The inventor says: I do not claim broadly the causing of one leaf of a spring to overlap another. An example of this is seen in the device of S. S. Barry, rejected 1852, in which the ends of the upper spring overlap those of the under spring, the two ends fitting together on the tongue and groove plan.

The employment of the tongue and groove avoids the necessity of eyes and bolts to connect the ends of the springs; in other respects the above plan resembles the elliptic spring, the weight being applied in the middle of the upper and lower leaves.

My improvement is quite different, as the upper leaves serve chiefly as horizontal cords to prevent the too wide opening of the lower leaves. The strain upon the upper leaves is chiefly in a horizontal direction.

Nor do I claim the broad idea of suspending the load upon the ends of elliptical springs.

But, to the best of my knowledge, it is a new feature in elliptical carriage springs, so to arrange them as that one set of the leaves shall serve as horizontally elastic cords to prevent the under opening of the other set of leaves.

I *claim* as a new article of manufacture a carriage spring made substantially as set forth.

No 17,794.—Bernard J. La Mothe, of New York, N. Y.—*Improvement in Railroad Car Seats.*—Patent dated July 14, 1857.—The nature of this invention will be understood by reference to the claim and engravings.

Claim.—Constructing seats with elliptical springs *c c* at the sides, receiving the cushions on the upper part of said springs, when combined with the friction rollers Q Q, or their equivalents, whereby a lateral motion is allowed to said seat, substantially as and for the purpose specified.

Also, constructing the back of the seat by an enclosing frame formed of the double bent rod *h*, with eyes at both ends, through which eyes, and between the bends of which rod, the sustaining pipe or rod *g*

passes, substantially as and for the purposes specified. It being understood that I do not claim a surrounding metallic rod receiving padding to form the backs of chairs, as this has heretofore been made use of; but I am not aware that a metallic frame for receiving padding to form the backs of car seats has ever before been formed as herein specified, whereby great strength and lightness are combined, and the back adapted to resist pressure from either side.

No. 18,252.—J. H. SWAN, of New York, N. Y.—*Improvement in Railroad Car Seats.*—Patent dated September 22, 1857.—This improved seat operates thus: By placing the pins b^2 on the lower corner of the back at the ends of the grooves of the segment a^3, and bringing the seat level, we have an upright back day seat with low back. To turn this into a high back seat, it is raised until the pins b^2 enter the notches; then if the back is thrown into a reclining position, the lever a^2 swings back with it at the top, carrying its lower end forward, which elevates and moves forward the seat into proper position for reclining comfortably. If the back is swung clear over to the opposite side so as to face the other way, all the relative parts and their action are exactly the same in the reversed position.

The inventor says: I *claim* the combination of the reversible back and seat by means of the lever a^2, substantially in the manner and for the purposes set forth.

I also claim the combination of the levers a^2, the arms b^1, and segments a^3, with their attachment for reversing the back, as specified.

No. 18,375.—CHARLES P. BAILEY, of Zanesville, O.—*Improvement in Railroad Car Seats.*—Patent dated October 13, 1857.—In the drawings, A represents the support of the car seat. Upon this support, or frame, are placed the seats B B, said seats having pivoted pins *a a* in them, which pass into slots or gains *c c* cut in the frame A; so that the seat which is supported on said pins may rock upon one set or the other, as the occupier may, for the time being, be sitting. Upon each of the seats B there are four cast-iron lugs or projections *e*, and at their front or back two mortises or openings *i i*; over the lugs or projections *e*, two hooked arms *f f*, on the rails of the back *c*, catch; whilst the two tongues *m*, also on said back, enter the mortises or openings *i i*, which firmly hold the back and seat together, but at the same time admit of the ready removal of the back when it is necessary to reverse it.

The inventor says: I am aware that an entire car seat has been made which was reversible on its supports; this I do not claim.

But I *claim* a detached reversible back to a car seat, when combined with a seat in such manner that said back and seat may have a falling or backward adjustment together, though separately connected to the frame, substantially in the manner and for the purpose set forth.

No.18,122.—WILLIAM M. MCCAULEY, of Washington, D. C., assignor to J. N. MCINTIRE, of the same place.—*Improvement in Head-Rests for Railroad Car Seats.*—Patent dated September 1, 1857.—

The nature of this invention will be understood by reference to the claim and engravings.

Claim.—Pivoting the rocker or shank A of the head-plate in the stationary holder C, in combination with the segmental spring *e*, whereby the head-plate accommodates itself to any inclination of the head, and forms a springing or elastic support, the whole constructed and operating substantially as described.

I do not broadly claim pivoting the head-plate to the stationary holder.

No. 16,916.—PERRY G. GARDINER, of New York, N. Y.—*Machine for Disengaging Railway Car-Springs from Mandrel.*—Patent dated March 31, 1857.—The cone mandrel, with the coil attached, on being removed from the coiling machine, is set perpendicularly upon the sliding-plate *m*, with the slot of the mandrel and the lower part of the slot *l* of the disengaging tool L exactly in line; and upon the tool L being forced downward, it forces the straight part of the mandrel through the cone until the slot is cleared of the steel plate, when that part of the steel plate which was in the slot of the mandrel meets the inclined part of the slot $l\ l^2$ of the tool L, and by this inclined part is either turned back out of the centre of the coil or is broken off. The straight part of the mandrel is thus pushed through and disengaged from the coil.

Claim.—The peculiar construction of the disengaging tool L, and the manner of constructing the platform M, when operating, in connexion with spindle S, for detaching the coil, in the manner described.

No. 18,515.—HENRY M. PAINE, of Worcester, Mass.—*Improvement in Railroad Car-Springs.*—Patent dated October 27, 1857.—The inventor, in showing how he manufactures his invention, says: I make the tie-rod A of iron tubing of the required length and diameter, and cut on either end a screw thread, on which are fitted nuts B B. The nuts work against and draw together two metallic plates C C, which plates condense the fibrous disks D to the required density.

The hollow tie-rod A receives the spring bolt E, and thus secures the cylinder disk firmly in its place without impairing its qualities as a spring.

Claim.—The combination of fibrous disks with the hollow tie-bar A, nuts B B, and metallic plates C C, substantially as specified and set forth.

No. 16,915.—PERRY G. GARDINER, of New York, N. Y.—*Machine for Creasing Plates for Railway Car-Springs.*—Patent dated March 31, 1857.—Motion being given to the rollers T and N, the steel plate is placed upon the carriage W, against the side of the guide plate *a*, and its end against the stop plate S. The carriage W is then moved forward towards the rollers, and the steel plate is thereby carried between the rollers T and N, by which it receives the required indentation upon its surface.

Claim.—The use of the V-shaped roller T, and flat-faced roller N, for creasing the plates, as described, when operating in connexion

with the carriage W, the plates S, and guide or stop plate *a*, in the manner and for the purposes specified.

No. 17,442.—ALBERT L. MOWRY, of Cincinnati, Ohio.—*Improvement in Cast Iron Car Wheels.*—Patent dated June 2, 1857.—The hub *a* is first cast, as represented in the engraving, and placed as a core in the centre of the mould of the wheel; the mould is then filled with metal, which completes the wheel in its parts, as represented in fig. 1, the wheel shrinking around the hub sufficiently tight to prevent shaking loose by use.

Claim.—Providing the hub *a* with a concave or other formed channel around the centre of the circumference; and arranging in the said channel the bead *f f* and ribs *g g*, and therewith the hub thus constructed; uniting it with the wheels, as specified, when the parts of the wheels are made and proportioned all as and for the purposes mentioned.

No. 16,851.—JAMES M. ROSS, of Springfield, Mass.—*Improvement in Cast Iron Car Wheels for Railroads.*—Patent dated March 17, 1857.—The illustration and claim give an idea of the nature of this invention.

The inventor says: I claim nothing in Mr. J. M. Sigourney's mode of constructing his wheel.

But I *claim* my mode of constructing the plate A, viz: by gradually increasing the thickness of the disk as it recedes from the hub and tread of the wheel, in the manner and for the purposes substantially described.

No. 18,752.—A. B. LATTA, of Cincinnati, Ohio.—*Improvement in Railroad Car Wheels.*—Patent dated December 1, 1857.—The nature of this improvement consists in constructing the wheel in such a manner as to make the two dished wrought iron plates bind the rim together for giving it additional strength, and is effected, after uniting the parts of the wheel together, by drawing the dished wrought iron plates out at their centre, thus holding them; which drawing outward and holding contracts the dished wrought iron plates at their periphery where they are united to the rim, and, with the tension of the plates thus given, draws all points of the rim toward the centre of the wheel and binds it together, increasing its strength.

Claim.—The wheel constructed, as represented, in its parts, for the purpose of producing a tension stress on the dished wrought iron plates B B, for binding the rims together, by drawing the plates B B apart in the centre and holding them by the ring *g*, as represented, and substantially for purposes specified.

No. 18,767.—MICHAEL PHELAN, of the borough of Bridgewater, Beaver county, Pa.—*Improvement in Railroad Car Wheels.*—Patent dated December 1, 1857.—The claim and engravings explain the nature of this invention.

Claim.—The curved projections on the disk of four reversed sines, forming arms, in combination with braces and a series of arches, so

arranged on the disk or front plate of four reversed sines, as to give a uniform spring to all parts of the casting in cooling, relieving the wheel from all contingent strain, and giving the greatest possible strength for the weight of iron used; and the application of said curved projections and combination of arches and braces, without a front plate, in casting car wheels, as described.

No. 17,250.—G. W. ALDEN, of New York, N. Y.—*Improvement in Wrought Iron Plate Railroad Car Wheels.*—Patent dated May 12, 1857.—The nature of this invention will be understood by reference to the claim and engraving.

The inventor says: I do not claim the construction of railroad wheels of two wrought iron plates united with a hub, as described, or of two plates otherwise formed and united than as described.

But I *claim* constructing the tread and flange of the wheel, and connecting the same with the hub or centre thereof, by the combination of the two plates A and B, formed substantially as described, and uniting in the flange of the wheel, as specified.

No. 16,724.—JAMES EVANS, of Portsmouth, Ohio.—*Improvement in Making Tire for Railway Car Wheels.*—Patent dated March 3, 1857.—The tapering pieces *d* are piled up, as represented, and placed between two rings A A. This pile is then heated in the furnace and afterwards welded together. Figure 1 represents the finished tire.

Claim.—The use of the rings A A, in connexion with the segments *d* of iron, as herein described; the same being cut and piled and prepared for forging in the manner set forth, for making tire for railroad car wheels, locomotives, and other purposes.

No. 17,506.—GEORGE HAUCK, of Mechanicsburg, Pa.—*Improvement in Carriage-Brakes.*—Patent dated June 9, 1857.—By this arrangement the locking block D is prevented from canting when brought into contact with hub *a*, and is caused to bear squarely upon said hub.

The inventor says: I do not claim the arranging of a lock on the axle of a wagon; neither do I claim locking the wheel by means of a pin attached to a lever arranged in the axle.

Nor do I claim locking the wheel by means of a sliding-clutch; both of said methods being old and objectionable, on account of causing the wheel to be stopped suddenly, without allowing it a chance to slide, and thus causing damage to the lock by the breaking off of the stop pin or teeth of the clutch.

But I *claim* providing the semi-circular locking block D with an extension arm E, and pivoting it to a bracket of the axle some distance from the point of contact with the hub, and arranging it relatively to the lever F and spring G substantially as and for the purpose set forth.

No. 17,376.—GILBERT HUBBARD, of Sandersfield, Mass.—*Improved Apparatus for Discharging a Horse and Shafts from a Carriage.*—Patent dated May 26, 1857.—By the pressure of the foot against the tail *f* of the lever-latch *d*, the foot-cam *b* may be unlatched; which, by the

connexions of slide *g*, arm *h*, lever-frame *i*, lever *w*, cam *y*, and slider *n*, causes the bolts *u* to be withdrawn from their bearings *v*, and thus to separate the shafts E from the forward axle. The retraction of the bolt *u* will so move lever d^1 as to cause the bolt c^1 to be drawn back in such a manner as to allow the leg a^1 to drop into the position represented in dotted lines, so as to support the shafts and prevent their cross bar F from dropping down on the hind legs of the horse.

Claim.—The shaft-rests, or legs, in combination with the shafts and bolting apparatus, and operated thereby substantially in the manner and for the purpose of supporting the shafts after their detachment from the carriage as described.

Also, the combination and arrangement of mechanism for attaching the shafts to and detaching them from the axle connexions, as specified; such combination consisting of the bolts *u u*, the sectors *p p*, the turning lever-frame *i*, and the rotary foot-cam *b*, connected and made to operate together substantially as explained.

Also, the combination of the lever *w* and hold-fast cam *y* with the turning pawl *i* and the slider *n* connected with the latter, substantially as specified.

No. 18,421.—John W. Wiler, Stephen B. Sturges, and G. McFall, of Mansfield, Ohio.—*Improved Hose Carriage.*—Patent dated October 13, 1857.—This invention consists in the construction of a hose carriage so that the axle is common to both the reel and the travelling wheels; and whilst the reel is fixed to the axle, the latter will revolve freely in both the frame of the carriage and the travelling wheels.

In the drawings, the wheels are shown at A, the frame at C, the bells at E, the rim of the reel at B, and the hubs at L. The hubs and the axle of the reel are fixed upon the main axle I; whilst the frame is connected with a short journal of the axle by means of the box N, held by screws. By this arrangement, the axle, which is straight, may freely revolve in the wheels and frame, carrying the reel around with it. This revolution of the axle and reel does not interfere with the carriage. Both ends of the axle are square, in order to receive the cranks G, by which the axle and reel are easily turned.

The inventors say: We *claim* making the axle of the travelling wheels capable of revolving with the reel, independently of the frame and wheels, so that cranks may be used on the ends of the common axle, for the purpose of more conveniently and efficiently winding up the hose, substantially as set forth.

No. 17,360.—Sylvester W. Beach, of Chicago, Ill.—*Improvement in Carriage Hubs.*—Patent dated May 26, 1857.—By turning screw-plate *e* to the right, the movable plate *c* is forced upon the stationary plate *d*; and the conical wedge *a*, expanding the elastic ring *b*, forces the spokes of the wheel through the dovetail apertures *g*, tightening the tire and at the same time the spoke in the hub.

The inventor says: I do not claim broadly the application of a conical wedge and elastic ring as new.

But I *claim* the combination of a conical wedge and elastic ring with the dovetail form of the spoke apertures in the hub, as described, and substantially as set forth.

No. 18,893.—ZINA DOOLITTLE, of Perry, Geo.—*Improved Machine for Turning the Band Portions of Carriage Hubs.*—Patent dated December 22, 1857.—A represents a socket, nut, or handle, which receives the screw G on the end of B; B is a square strap wrench as represented at D at one end, and the screw G at the other; C is a bar, with a strap E at one end, through which B passes. The other end is secured to the handle by the clasp F. Opposite the strap E, on the bar C, is a projection, upon which the cutter H is secured by the bolt I, thus making the bar C act as a sliding rest.

The inventor says: I do not claim the exclusive use of any of the parts, taken as parts of the machine described and shown, but only in so far as the same is used in combination for the purpose of my invention.

But I *claim* the exclusive use and combination of the strap wrench D, the handle A, and the sliding rest C, with the cutter H; the whole arranged and shown for the purpose set forth.

No. 17,846.—ALEXANDER RICKART, of Schoharie, N. Y.—*Improved Method of Turning Carriage Hubs.*—Patent dated July 21, 1857.—By having the mandrel A connected, by means of gearing in the frame H, with the driving shaft D, motion may be given to both the cutter-head C and stuff I from the same shaft D; and at the same time the carriage E may be moved by the operator towards the cutter-head, and the stuff consequently fed to the cutters, without interfering with the gearing which rotates the stuff.

The inventor says: I do not claim, separately, the rotating cutter-head.

But I *claim* the frame H placed on the driving or power shaft D, and connected with the mandrel G by the arms *m m*, the frame H being provided with the gearing, as shown, to connect the shaft D with the mandrel G, which mandrel is placed on the sliding carriage E, when the above parts are used in connexion with the rotating cutter-head C; the whole being arranged substantially as and for the purpose set forth.

No. 18,254.—CHAUNCEY THOMAS, of West Newbury, Mass.—*Improved Carriage Prop.*—Patent dated September 22, 1857.—The standard A is provided with a male screw C, which is furnished with a screw cap or tapering nut D, that screws upon it, as shown in the engraving. The tapering screw, nut, or cap, besides forming a finish to the prop, serves to confine the leather to the bow, and also as a shoulder for one of the joint bars G H to rest against.

The inventor says: I *claim* an improved carriage prop, as constructed with a screw shoulder cap D, combined with a joint bar standard A, and arranged between the leather L and the joint bars G H, and so as to screw upon the said standard, substantially in manner as described.

No. 18,451.—BOLD R. HOOD, of Clinton, N. C.—*Improvement in Carriage Springs.*—Patent dated October 20, 1857.—This invention consists in two auxiliary springs coiled in opposite directions in the path of vertical scrolls around a horizontal central pin or support of

the reach, and attached by their outer terminating ends, one to the front and the other to the rear elliptic springs of a carriage.

In the engravings, A A are the axles, B the reach, and C C brace bars; D D are ordinary elliptic springs attached to the front and hind axles; E is the frame which rests upon the springs and supports the body; F F are the central auxiliary springs; they are made preferably of round steel rods, which are coiled vertically so as to form a series of scrolls of gradually increasing size.

The inventor says: I am aware that auxiliary springs have been carried from the centre of the reach to the ends of the carriage body, or connected with the transverse springs; therefore, I do not claim broadly the use of auxiliary springs, irrespective of their peculiar construction and arrangement.

But I *claim* the combination and arrangement of the springs F F with the springs D D, as described, for the purposes set forth.

No. 16,802.—CHARLES A. MCELROY, of Delaware, Ohio.—*Improved Arrangement of Carriage Springs.*—Patent dated March 10, 1857.—The springs $o\,o^1$ are pivoted on the circular head-block *b*, together with the stirrups $n\,n^1$, which serve to keep the springs in their proper position, there being sufficient space left between the springs and the stirrups to allow the springs to adjust themselves to the positions of the vehicle. Figure 2 represents a top view of the apparatus on a smaller scale.

Claim.—The springs *o*, pivoted as described, and stirrups *n*, all arranged and operated in the manner and for the purposes set forth.

No. 16,986.—RINEHART P. MARCH, of Jeffersonville, Pa.—*Improved Arrangement of Carriage Springs.*—Patent dated April 7, 1857.—The nature of this invention will be understood by reference to the claim and engraving.

The inventor says: I do not claim the combination of wooden and metallic springs as new, nor do I claim the form of springs as new, as both have been known before.

But I *claim* the arrangement of the combination spring B C, axle A, slotted bar E, and guide pin F, for the purpose of supporting the spring and preventing lateral strain, and for making of equal strength a much cheaper and lighter carriage than usual.

No. 16,919.—JOHN S. HALL, of Pittsburg, Pa.—*Improved Steam Carriage.*—Patent dated March 31, 1857.—The oscillating engines G drive the main shaft M, the pinion P of which meshes into the intermediate gears O, which operate the pinions *b* of the boxes H^2; said boxes drive the square axle E, to which the carriage wheels F are attached. By operating the hand-wheel *j*, shaft T is turned, the pinion D of which turns the toothed sector C, (fig. 2,) causing the wheel frames to swivel on their centres Z, and thus changing the direction of the carriage; the pawls *k* and *n* are pressed by spiral spring *l* against the ratchet wheel *i*, preventing it from returning to its former position. When the carriage is required to run fast, the intermediate gears O are thrown out, and the pulleys N are made fast to the shaft M by means of the clutches S.

Claim.—1st. So combining and arranging the driving machinery and body of the carriage with the wheels and axles as described, so that the latter may be both swiveled, moved, or adjusted in any and all directions, without in the least changing the relation of all parts of or otherwise affecting the said driving machinery, or body of the carriage.

2d. The stationary, universal driving bearings or boxes H^2 H^2, or their equivalents, whereby the axles and wheels may be readily rotated or driven in all their variable relative positions with the driving machinery and body of the carriage.

3d. The double ratchet wheel *i*, in combination with the pawls *k* and *n*, and spiral spring, constructed and operating as set forth.

No. 17,680.—R. S. Jennings, of Waterbury, Conn.—*Improved Carriage Top.*—Patent dated June 30, 1857.—The hood is attached to the front bow A^1 of the carriage, by placing loops F over the buttons *g*, and having the tenons *e* fitted in the staples *h* attached to the front bow A^1 of the carriage. When the hood is not required, it is detached from the front bow A^1, and can be folded together, owing to the hinged joints *c d*.

Claim.—The hood or attachment, constructed of the jointed bow A, provided with the screen or apron C, and provided with loops *f* at its upper part and tenons *e* at its lower part, and applied to the top, as shown and described, for the purpose set forth.

No. 16,925.—R. S. Jennings, of Waterbury, Conn.—*Improvement in Carriage Tops.*—Patent dated March 31, 1857.—When the tenons *f* are fitted in the mortises *g*, and the bars *c* adjusted as represented in figure 2, the carriage top will be permanently secured to the vehicle. To detach the top, the tenons *f* are withdrawn from their recesses, the bars *c* are detached from the centre bow C, and the bows may then be folded as represented in dotted lines in figure 3.

The inventor says: I do not claim having carriage covers to fold up into a smaller compass, or in a manner to reduce their length by falling back.

Neither do I claim having them to fold so as to reduce their height, by means of a joint in the vertical portion of the front bows, as in Scripture's arrangement.

I *claim* the employment of a transverse hinge-joint *b* on each of the bows B C D, at the centre of their top or horizontal portion, in combination with staples *d d* and two pairs of bars *c c c c*, which are pivoted at one end to the front bows, and at the other end are each provided with a slot e^1, and furnished with a hook *e*, substantially as and for the purposes set forth.

No. 16,467.—George Cook and David Cook, of New Haven, Conn.—*Improvement in Calash Carriage Tops.*—Patent dated January 27, 1857. The spaces to receive the wooden bows E are stitched in the cover of the calash top; the ends of said wooden bows are then passed through the stitched spaces in the leather, and the flat shanks D are inserted into the slots *b*; the screws *c* are inserted in holes *d* of the wood, and holes

a of the shanks D, and fastened; the joints B and C are then connected, and the whole is secured to the carriage body by a screw-bolt passing through the eye A.

Claim.—The combination of the independent joints with the method of inserting the flat part of the shank, or slat iron, into the slot in the bow, and securing it there, so that the leather may be stitched and the bows and shanks afterwards inserted and secured, when the whole is constructed and combined substantially as described.

No. 18,992.—A. C. SHELTON & BYRON TUTTLE, of Plymouth, Conn.—*Improvement in Joints for Carriage Tops.*—Patent dated December 29, 1857.—In this invention the plates *a b c d* form, when combined together, a barrel, and the shoulder *e* of each arm rests upon and extends across the entire length of said barrel. The shoulders *e* are thus made to form a wide base for the arms, so that any injury from a lateral movement of the arms may be prevented.

Claim.—Providing the lower ends of the arms A B C D with circular plates *a b c d* and shoulders *e*, said plates being so arranged as to constitute a barrel over which the shoulders *e* may move, said shoulders giving support to the arms A B C D, all as described.

No. 18,558.—REUBEN W. STONE, of Solsville, N. Y.—*Improvement in Joints of Carriage Tops.*—Patent dated November 3, 1857.—A A^1 B, B^1 represent two pairs of metal bars curved slightly, as shown in the engraving, or of an approximate form. The bars A^1 B^1 of each pair are somewhat longer than the others, and the two bars of each pair are connected by a rivet *a*, said rivets passing through the bars a short distance from their inner ends. At the inner end of each bar a loop or hook *b* is formed; these loops or hooks are formed at opposite sides of the bars, that is, the loops at the ends of the bars A^1 B^1 are formed at their outer sides, and those of the bars A B at their inner sides, so that when the two bars are distended each loop will receive and support the bar of its fellow loop.

Claim.—The bars A A^1 B B^1 connected by the joints *a*, and provided with loops or hooks *b b*, arranged substantially as and for the purpose set forth.

No. 18,106.—C. W. SALADEE, of Columbus, O.—*Improved Mode of Adjusting Carriage Tops.*—Patent dated September 1, 1857.—The nature of this invention will be understood by reference to the claims and engravings.

The inventor says: I do not claim the lateral rod D D when placed on the outside of the seat back, for the purpose of adjusting the top, as new; letters patent having been granted to me for the same, dated September 9, 1856.

But I *claim* extending the top prop A back of the rest iron B a sufficient length to form the lever C in combination with the lateral rod D D, as shown.

I also claim the scroll spring E, in combination with the pivot iron L and the back bow H, (or either of the other three bows,) for the purpose of assisting in raising the top, and likewise to prevent its

falling with the full force of its own weight, when in the act of throwing it back, substantially as set forth.

No. 17,520.—JAMES D. SARVEN, of Columbia, Tenn.—*Improved Carriage Wheel.*—Patent dated June 9, 1857.—The nature of this invention will be understood by reference to the claim and engravings.

The inventor says: I *claim* the improvement in carriage wheels, which consists in the employment of flanged metallic collars H, as described, or other equivalent devices, in combination with a wooden hub G, and these in combination with the arrangement of the spokes at the hub, as described; by which means strength and support are given both to the hub and to the spokes at or near the hub, and by which means I am enabled to use any desired number of spokes in each wheel, thereby preventing indentations being made in the rim of the wheel between the spokes, and by which means I am also enabled to use a much smaller hub than those in general use, and at the same time retain a sufficient degree of strength at the hub; the whole being constructed and arranged substantially as and for the purposes set forth.

Also, the flanged collars, as described, or other equivalent devices, when used in combination with a wooden hub, if the spokes are arranged as set forth, or in any other manner.

No. 18,097.—JAMES W. JACKSON and LUTHER W. BURCHINAL, of Smithfield, Pa.—*Improved Hub for Carriage Wheels.*—Patent dated September 1, 1857.—When the plates A and B are fitted together on shaft F, the ends of the tenons C pass into corresponding mortises *a* in said plates; and by forcing together the plates A B, by means of screw bolts F, the tenons C will be expanded, and the inserted spokes will be grasped on four sides simultaneously.

The inventors say: We do not claim a hub composed of two plates and corresponding tenons, within which the spokes are to be inserted.

But we *claim* making the mortises of the hub adjustable in two different directions, so that the spokes of the wheel shall be grasped on their four sides simultaneously when the two plates of the hub are forced together by the screw bolts, in the manner substantially as set forth.

No. 18,855.—CORNELIUS MERRY, of New York, N. Y.—*Improvement in Hubs of Carriage Wheels.*—Patent dated December 15, 1857.—In the engravings, H is the hub; in each extremity of the hub is a box B, each with two inferior flanges *a* and *b*. The axle arm A is of small diameter, and has secured to it two small wheels C C^1, which rest in the grooves between the flanges of the boxes B. The axle arm passes eccentrically through two other wheels W W^1, which rest upon and bear against the flanges. The wheel W is hung upon a journal *c*, attached to an end plate P secured to the hub, the axis of this journal being coincident with that of the hub. Wheel W^1 is kept in position by the ring R secured to the inner end of the hub.

By this construction the surfaces in contact are the flanges *a* and wheels W W^1, the boxes moving upon the wheels; the wheels C C^1,

resting in the grooves between the flanges *a b*, serve to support the axle arms, and strengthen the system.

Claim —The combination of boxes B, wheels W W[1], securing plates P and R, and wheels C C[1], with the small axle arm A, constructed and operated as described.

No. 18,556.—N. J. Skaggs, of Talladega, Ala.—*Improved Mode of Tightening Tires on Carriage Wheels.*—Patent dated November 3, 1857.—The claim and engravings fully describe this invention.

The inventor says: I do not claim, separately, connecting the ends of the tire together by means of a screw, for this has been previously done.

But I *claim* forming the ends of the tire, with the heads *a a*, recess *e*, and projecting portion *f*, as shown; in connexion with the screw rod E, by which the ends are secured together, and the tire contracted as may be desired, and a continuous or perfect joint or connexion obtained.

No. 16,353.—John W. Crannell, of Olivet, Mich.—*Improvement in Carriages.*—Patent dated January 6, 1857.—The nature of this invention will be understood by reference to the claim and engraving.

Claim.—The mode of constructing the carriage body in two parts, the inner ends chamfered or rounded below; said bodies being attached to two elastic bars J, in combination with the independent seat frame, rounded as at I, and carrying inside two springs F F, or their equivalents, in either a horizontal or vertical position, but whose action is horizontal and against the chamfered and detached ends of the carriage bodies, for the purposes, as described and set forth, of producing a gentle and undulating horizontal movement in the seat, or any other device whose effect may be substantially the same.

Also, the use of the stop plates G G, operated by screws or otherwise, for the purposes, as described, of regulating the elasticity of the springs F F.

No. 17,191.—Sherlock H. Bishop, of Orange, Conn.—*Improved Adjustable Pole for Carriages.*—Patent dated May 5, 1857.—The braces C and D are attached to the pole A by means of joints *g*, and to the arch piece B by means of eye-bolts *e*, which pass through slots *c* of the arch piece.

Claim.—The method described of adjusting the braces by means of the joints, slots, and eye-bolts; when the whole is constructed, arranged, and made to operate substantially as set forth.

No. 16,528.—George Cook and David Cook, of New Haven, Conn.—*Improved Adjustable Seats for Carriages.*—Patent dated February 3, 1857.—The operation of this apparatus will be understood from the claim and engravings.

Claim—Constructing, attaching, and locating the seats, so as to preserve the perfect symmetry of the carriage, whether it be used with one or two seats, without any necessity of securing the movable seat, when the whole is constructed, and arranged, and made to operate substantially as described.

No. 17,638.—LUTHER OTWAY RICE, of Castorville, Canada West.—*Improved Central Draught Joint of Carriages.*—Patent dated June 23, 1857.—The nature of this invention will be understood by reference to the claim and engravings.

The inventor says: I do not wish to confine myself to the precise arrangement and construction herein set forth, but would include all modifications which substantially embrace my invention.

I *claim* the central draught joint P, when constructed, arranged, and used substantially as described.

No. 17,805.—RUFUS NUTTING, of Randolph, Vt.—*Improved Mode of Constructing Carriages.*—Patent dated July 14, 1857.—The nature of this invention will be understood by reference to the claims and engravings.

The inventor says: I am aware that springs have been applied so as to converge from near the extremities of the hind axle to the fifth wheel on the front axle, so as to obviate the necessity of the usual reach, and also that springs of double curvature for producing a compensating effect, are in themselves not new.

But I *claim* the arrangement of compensating springs, substantially as described and specified, with the front axle N and rear axle B; so that while the axles are retained in their proper positions, the action of the compensating spring prevents the spreading of the axles on one side of the vehicle, and thereby tends to preserve the accurate tracking of the hind wheels.

I also claim the combination of the guard with the hinder part of the springs, substantially as set forth, and for the purposes specified.

No. 17,337.—RICHARD MURDOCH, of Baltimore, Md.—*Improvement in Running-Gear of Carriages.*—Patent dated May 19, 1857.—The short axles *a* of the front wheels are attached to the extremities of the cross-bar C by bolts *e* through the brace levers *f*, which are fastened by straps to the axle *a*, as represented in fig. 2. Upon turning the vehicle, the axles *a* can be made to slide, by means of their boxes *b*, on the swivel-bar *c*, when the several parts will assume the positions represented in the engraving.

The inventor says: I disclaim the short axles and the manner of turning them about their attachment.

I also disclaim supporting the extremities during their movement on stationary train ways.

I also disclaim the swivel-bar *c* and boxes *b b*, in combination with the short axles *a a* connected with the extremities of the cross-bar, as described; this having been secured to me by letters patent of the United States, bearing date the 24th day of June, 1856.

I disclaim also all devices in which the fore wheels remain parallel to each other while the vehicle is turning.

I disclaim projecting the brace levers backwards and inwards from the short axles, as that has been done before, and is inferior to my plan, inasmuch as it has a more limited range of motion, and gives less control over the wheels when turning, and greater irregularity in their motion, and increased strain upon the tongue.

But I *claim* giving to the brace levers *f f* a forward and outward projection from the short axles, substantially in the manner and for the purpose specified.

No. 18,403.—THOMAS MILLER, of Worcester Township, Pa.—*Improved Mode of Fastening Shafts and Poles to Carriages.*—Patent dated October 13, 1857.—In using this invention, it is necessary to have a hinge hook, which is fastened to the axle in the usual way by a clip securely screwed on the hinge hook, being made of different sizes to suit the different vehicles to which it is applied; the shaft or tongue has an eye such as is commonly made. The projection or increased width is made all on one side, which is not, however, essential; the hook has a slit of about half an inch long and one-eighth wide, shown in drawing, at B. The eye also has a slit in it, of the same width and half the length as the hook, and that is put in on the side nearest the shaft or tongue, so that the key A will slip into the slit in the hook or pin when the shaft or tongue is held perpendicular or nearly so; then the shaft or tongue being lowered to the position when in use, the eye covers the projection in the key, and thus keeps it in place very securely.

The inventor *claims* the combination and arrangement of key *a* and the slit B in the hook or pin, to be used in connexion with the other parts, so as to constitute an improvement in, and a new mode of fastening tongues or shafts to, axles in carriages and all kind of vehicles.

No. 17,970.—EDWARD C. JONES, of Pittsburg, Pa.—*Improved Steering Apparatus of Steam Carriages.*—Patent dated August 11, 1857.—By turning pinion E in the direction of the arrow, the swivel wheel B is turned to the position represented in the engraving; the same turning on pivot *a* at the same time that sector M is moved in the direction of the arrow, and the several parts are thrown into the positions represented in the engraving, whereby the clutch J^1 disconnects the wheel G^1 from the axle H; thus the wheel G only is revolved by the action of the engine, turning the carriage in the direction of arrow *z*.

The inventor says: I am aware that the lever arrangement which communicates the motion from the parts operating the steering wheel to the clutches of the driving wheels may be modified and changed in many different ways, by various mechanical means; I therefore do not confine myself to any particular, or to the special lever arrangements described, to effect said communication of motion or power.

But I *claim*, first, operating the clutches J J^1 of the driving wheels by the same parts by which the steering wheel is operated, in such a manner as to disengage (by operating the said clutches) the one or the other of the driving wheels simultaneously with the turning of the steering wheel to the right or left, substantially as set forth.

Second. I claim the arrangement of the lever M, links P P^1, levers N N^1, with their arms O O^1 connected therewith by a butt hinge joint, and the springs Q Q^1, when constructed, combined, and operating in connexion with the pinion E and the clutches J J^1, substantially as described and for the purpose set forth.

Third. I claim the arrangement of a pivot *a*, in or near the centre of the steering wheel, and passing through its axle, for the purpose set forth.

No. 18,153.—J. GEORGE LEFLER, of Philadelphia, Pa.—*Improved Wear Iron for Carriages.*—Patent dated September 8, 1857.—The cast iron guards B B[1] permit the wheels D of the front axle F to run sufficiently under the body A to admit of the carriage being turned in a small circle.

The inventor says: Disclaiming a guard broadly, or allowing the wheels to pass partially under the body of the wagon.

Claim.—The peculiar construction of the metallic recess guards B, with the flanges *a a*, bearing against the bottom and sides of the body of a plain carriage or wagon, and arranged with the latter as and for the purposes set forth.

No. 18,781.—HENRY G. VANDERWERKEN, of Greenbush, N. Y.—*Improvement in Propelling Cars and Carriages by Horse-power.*—Patent dated December 1, 1857.—The nature of this invention consists, first, in applying the propelling power uniformly and continuously to the upper side of the axle; thereby giving the greatest amount of leverage, without decreasing the velocity or effect produced. Secondly, in hanging the endless chain platform H in such a manner that when animal power is applied thereon, it forms a self-adjusting inclined plane whichever way the animal turns.

The inventor says: I *claim*, first, so arranging the endless belt platform on a frame, independent of the truck, that the return part or under side of the belt may rest upon and gear into pinions on one or both axles, and thus cause them to rotate in the direction in which the horse is apparently walking, without the use of any intermediate gearing, in the manner substantially as specified.

Second. I claim supporting the endless belt platform on the axles of the truck in such manner, that when the horse is at work, it will assume an inclined position, and when at rest a horizontal one, in the manner and for the purposes set forth.

No. 17,793.—CHARLES T. KIPP and JOHN LAWRENSON, of New York, N. Y.—*Improvement in Applying Fly-Wheel to Hand Cars.*—Patent dated July 14, 1857.—The nature of this invention will be understood by reference to the claim and engravings.

Claim.—The arrangement of levers B and rods C, attached to crank wheel F, for operating the fly-wheel A; the whole constructed and operated as described and for the purpose set forth.

No. 16,762.—JOHN B. WICKERSHAM, of New York, N. Y.—*Improvement in Guide-Wheels for Railroad Cars.*—Patent dated March 3, 1857.

The inventor says: I do not claim guide-wheels, as these have before been used against the inner sides of the track. But I am not aware that said guide-wheels have ever before been used in connexion with a grooved rail, thereby lessening the liability for the car to run off the track, as set forth, when said guide-wheels are each provided with a

separate attachment for allowing of their rise and fall independently of each other, to pass any obstructions, as specified.

I *claim* the guide-wheels D D, at the front and rear ends of the car, when combined with the grooved rail and attached to the car in the manner and substantially as and for the purposes specified.

No. 18,884.—ROBERT MCWILLIAMS, of Philadelphia, Pa., assignor to Himself and ADAM J. FREDERICK, of Philadelphia, Pa.—*Improvement in Journal-Boxes for Railroad Cars.*—Patent dated December 15, 1857.—N is a hole in the lugs of the box. When the oil chamber is in place, a bolt having a rivet head at one end is passed through and secured by a nut and binding nut at the other end. This bolt is all the fastening that the oil chamber requires; and by removing it, said chamber may be withdrawn, and the journal and the whole internal arrangement of the box exposed. By inclining the grooves, the lower section of the box or oil chamber is secure.

Claim.—The combination of the lower or oil chamber of the box, with the inclined tapering grooves in the outsides thereof, on a line above the lower line of the journal, so that the latter may easily and quickly be exposed for filling, at the same time giving easy access to the packing, as set forth.

No. 16,806.—PHILIP M. PYFER, of Baltimore, Md.—*Improved Method of Preventing Dust, &c., from Entering the Windows of Railroad Cars.*—Patent dated March 10, 1857.—The upper wings of the fans D are protected by a hood E that runs along the whole length of the car. When the cars are in motion, the fans will be revolved by the action of the air upon the lower wings of the fans. This is intended to create a rapid current of air across the window C, and thereby to prevent cinders and dust from entering the cars.

Claim.—The arrangement of rotary fans D D, or their equivalent, upon the outside of the body of the car, when employed in conjunction with the windows thereof, substantially in the manner and for the purposes set forth.

No. 17,114.—WILLIAM PEARCE and JOHN LOWRIE, of Piedmont, Va.—*Improved Mode of Dumping Railroad Cars.*—Patent dated April 21, 1857.—The loaded car D being run on the rails within the rockers *c*, and the wheels of the car being secured to the housing by means of ribs *j*, the rockers *c* together with car D are turned into the position represented in dotted lines, the projections *h* falling into the grooves *x* of the frame. As the catches *l* of the housing come in contact with projections *n*, the doors *w* are opened, and the coal or material contained in car D passes over the side of said car, and, through the housing, down the chute M. The motion of the rockers *c* is checked by means of break-lever *t* and break-wheel *s*, checking the motion of pinion *q*, rack *p*, and pitman *o*, and the car D can be raised to its former position by operating pinion *q*.

Claim.—First. The method of discharging cargo from cars by means of a rocking track, substantially as specified.

Second. We *claim* the mine car, as described, constructed without

any openings in its sides, ends, or bottom, for discharging its cargo, and with its ends raised higher than its sides, for the purposes set forth.

Third. The ribs or flanges *j*, in combination with the rocking track, for the purposes and in the manner substantially as specified.

Fourth. We claim the shoes *g*, in combination with the projections *h*, for steadying the rocking track whilst the cars are run on and off, substantially as set forth.

Fifth. The method of braking the rocking car, (as it is capsized to discharge the coal and afterwards raised,) by means of the brake *u* and wheel *s*, the latter being mounted on the shaft of a pinion *q*, operated by means of rack *p* and pitman *o*, or their equivalents, substantially as specified.

Sixth. We claim the arrangement of the cam-stud *u*, in combination with the latch-bar K, by which the doors *w* of the rocking car are released when it is brought into proper position to discharge its cargo into the chute, as set forth.

No. 17,953.—DANIEL H. FEGER, of New York, N. Y., assignor to Himself and DANIEL SHEPHERD, of the same place.—*Improved Pedestal for Railway Cars and Locomotives.*—Patent dated August 4, 1857.—By detaching the jaw B from the brace G, and lifting it back on the hinge-bolt C, the axle-tree and wheels with the journal-box can be rolled out and removed, provided the weight of the truck be ever so little taken from the journals.

Claim.—The employment of a loose or movable jaw to the pedestal, constructed and operating substantially as described and for the purposes set forth.

No. 16,520.—EDWARD H. ANDERSON, of Milford, Del.—*Safety Coupling for Railroad Cars.*—Patent dated February 3, 1857.—To uncouple the cars, the pin *g* is removed, and the bolt *b* is pushed forward by working the lever *m*; then the bolt *c* will also move forward by the outward tension of the springs connected with said bolt by the arms *d d*, and the cars are uncoupled. This arrangement also permits the cars to uncouple automatically in case of an accident. If one of the cars runs off the track, it assumes an oblique position towards the other, and thus the bolt *b* is jerked out of the socket of bolt *c*, and the cars are uncoupled in the manner as above described; the obliquity of the bearing parts being adapted to keep them in place for any contemplated motion on the track.

The inventor says: I do not claim spring catches for couplings.

Nor do I claim the principle of self-separation when the cars get off the track.

But I *claim* the special mode set forth of effecting the self-coupling and self-uncoupling by the combined action of the following parts, to wit: catches *a a*, bolt *b* with its rounded end, bolt *c* with its concave end, jointed arms *d d*, and spring catches or jaws *e e*, all constructed and operating as set forth.

No. 18,950.—JOHN C. BLAIR, of Pittsburg, Pa.—*Improvement in Springs for Railroad Cars.*—Patent dated December 29, 1857.—The nature of this invention consists in forming a car or carriage spring of a pile of steel plates or leaves *a a*, when each plate is so bent as to form a series of reversed semi-ellipses, and the plates so piled one upon the other that the highest parts of one plate shall be in contact with the lowest parts of its fellow or next adjacent plate, and *vice versa;* each leaf or plate forming several points of contact for the plate overlying it, and thus disseminating through the pile both the lateral and vertical pressure upon the spring.

Claim.—A spring composed of a series of leaves or plates so bent or curved, that, when piled one upon another, the highest and lowest points of one leaf shall be in contact with the highest and lowest points, respectively, of the next adjacent leaf or plate, and so on throughout the series, substantially as described.

No. 16,884.—THEOPHILUS E. SICKELS, of Kennett Square, Pa.—*Improvement in Steam Brakes for Railroad Cars.*—Patent dated March 24, 1857.—The operation of this invention is thus described by the inventor. When the cars are detached from the engine, the weight W, suspended by the chain E, draws the brakes against the wheels with a force sufficient to cause the wheels to slide, instead of rotating, if motion is communicated to the car. Should it be desirable to suspend the action of this weight, it may be done by winding the brake-wheel until the weight W is so far elevated as to cause all pressure by the brakes against the car wheels to be removed. When a train is all connected together and to the locomotive in the ordinary manner, the first operation is to connect the pipes P between each car, and also a pipe leading to the steam chamber of the locomotive. Next, the hand-brake wheels are unwound, so that the weights W may cause pressure of the brakes against the wheels of the cars. When the train is ready to start, the engineer admits steam into the pipes, and thereby to the under sides of pistons T T. These being forced upward by a pressure considerably greater than that of the weights, acting in a contrary direction, they are raised; whereby the brakes are removed from the wheels of the cars, and the train is free to start.

The inventor says: I am aware that steam brakes have been used which are brought into use by the action of steam in forcing them against the car wheels, and also that brakes have been used which were forced against the car wheels by the action of a spring; but the use of a spring, or mechanical equivalent, bringing the brakes into operation, in combination with the use of steam or other gases for arresting the operation of the brakes, is new and original with me.

I do not claim the use of steam for holding the brakes to the wheels of railroad cars, as this has been done.

But I *claim* the so combining the use of steam, or its equivalent, with the brakes of railroad cars, as that the steam shall hold the brakes from the wheels, and its partial use or disuse admit a weight or spring to apply said brakes, in a manner substantially as described.

No. 17,982.—ALBERT POTTS, of Philadelphia, Pa.—*Improvement in Safety Tops for Railway Cars*—Patent dated August 11, 1857.—The top C of the car rests with suitable flanches within the groove M of the rail A B, which is fitted to and rests upon the rail E F of the car, both these rails running in a longitudinal direction on the top of the car; the joints at the front and rear are represented in figure 2, at A G and B K; when the car is inclined, or thrown over laterally, the pendulum P will swing clear of the arc R, releasing the top C, and permitting it to fall off when the car falls on either side or end.

Claim.—First. The mode or manner of constructing railway passenger cars with the tops and bodies disconnected for the special purpose specified.

Second. The metallic plates or grooved and bevelled rails, as above described, for uniting the tops with the body of the car, as specified.

Thirdly. The combination of the pendulums, as fully described in figures 3 and 9, for the purpose of holding the tops to the bodies of the cars, substantially as specified.

No. 17,801.—HENRY D. MEARS and WILLIAM HOULTON, Jr., of Baltimore, Md.—*Seal for Railroad Freight Cars, &c.*—Patent dated July 14, 1857.—The disk B is passed through the staples *a*, and the strip *a* is then doubled so as to bring the hole b^1 over the rivet c^1; the disks are then brought together and the rivet is clinched, and an impression is then stamped on the disks by means of dies.

Claim.—The device for sealing described, the same consisting of soft metallic disks connected by a strip or wire of harder metal, as described; the whole constructed and operated substantially in the manner set forth, and applied to the purposes specified.

No. 17,802.—HENRY D. MEARS and WILLIAM HOULTON, Jr., of Baltimore, Md.—*Seal for Railroad Freight Cars, &c.*—Patent dated July 14, 1857.—The wire B is passed through the staples attached to the door and door frame; the ends of the wire are then bent and passed into holes or slots in the soft metal disk A, which is then struck with a proper die, confining the wires firmly within the disk A.

Claim.—The seal described, the same consisting of a disk of soft metal having one or more holes or slots through it for the reception of the ends of a wire or metallic strip, which are confined by the compression of the disk; all constructed and operated substantially in the manner described, and applied to the purposes specified.

No. 18,400.—F. W. A. KRAUSE, of Baltimore, Md.—*Implement for Sealing Railroad Cars, &c.*—Patent dated October 13, 1857.—By this improvement a portable hand implement is furnished for impressing a suitable device upon metallic blanks, and compressing the same upon wire cord passed through said blanks in such a manner that the removal of the wire cannot be effected without disfigurement of the seal, thus furnishing a ready mode of sealing railroad cars, &c.

In the drawing, A is the upper handle of the implement, having its end so formed that it presents a flat face *b*. The lower handle B is provided with two uprights *c c*, rising at right angles thereto; these

uprights are connected by a cross-piece *d*, which serves as guide and retainer of the upper die and the end of a spring; *e* is a bolt passing through the uprights, and also through the end of the handle A, thus connecting them. Through the cross-piece *d* a cylindrical hole is formed for receiving the upper die *f*, so fitted therein as readily to be moved; immediately below this opening is a recess or seat for the lower die *g*, which is secured in the lower handle by a set screw; both the lower and upper die are provided with holes *o o*, for the passage of the wire cord and prevention against cutting; *h* is a flat spring attached to the lower handle, its outer end enters a hole in the side of the cylinder forming the upper die; the spring is guided by the slot or opening in the cross-piece *d*.

The inventor says: I *claim* the employment of the dies *f g*, when provided with holes *o o* therein for the protection of the wire cord, and when said dies form a portion of the press for the purpose of impressing devices upon and compressing the metal of the seal upon wire, substantially in the manner and for the purposes set forth.

No. 18,984.—James A. Norris, of Philadelphia, Pa.—*Improvement in Journal Boxes for Railroad Cars.*—Patent dated December 29, 1857.—The claim and engravings explain the nature of this invention.

Claim.—The combination of an ordinary gland and stuffing box with the journal box of a railroad car, whereby the oil is retained, and the admission of the dust rendered impossible; the whole constructed and arranged as and for the purpose specified.

No. 17,486.—J. S. Brown, of Washington, D. C.—*Improved Self-Loading Cart.*—Patent dated June 9, 1857.—As the machine is drawn along on the wheels B, the scraper E cuts a slice from the ground; and the elevators C, being revolved by bevel wheels G H I, take the earth from the scraper, elevate it, and discharge it into the receptacle D. When it is desired to move the machine from one locality to another, the crank O is turned, causing cranks M to turn with shaft L, whereby the bars Q and hangers S are raised, the bars Q being retained in a horizontal position by the secondary cranks *l*. The scraper E can be retained in its elevated position by bringing the stops *m* close up against the cranks *l*, when said cranks are in their highest positions.

The inventor says: I do not claim a revolving elevator nor a scraper alone.

But I *claim* the combination of a revolving elevator and a scraper, substantially in the manner specified.

I also claim the employment of the cranks M M on the axle, for the purpose of raising and lowering the elevator and scraper by simply turning the axle half a revolution.

I also claim the use of the winch *o* attached to the projecting end of the axle, for the purpose of giving the proper movement to the said axle, in the manner described.

I also claim the arrangement of the lifting bars Q Q, cranks M M *l l*, hangers S S, and brace bars R R, substantially in the manner and for the purpose set forth.

I also claim the stops *m m* on the frame A, arranged in combination with the crank *l l*, substantially in the manner and for the purposes specified.

No. 18,519.—JOHN S. ROBINSON, LEVI HERENDEEN, and GEORGE SHELDON, of Canandaigua, N. Y.—*Improvement in Railroad Chair.*—Patent dated October 27, 1857.—This improvement is on that kind of chair usually called "a key chair," in which a wooden pin or key is driven in by the side of the rails, to tighten them in their places and deaden the sound, &c. The improvement consists in placing the spike holes nearly or directly under the key when it is in its place; so that when the spikes and key are both in their places, the heads of the spikes will be in contact with the key, which prevents them from jarring out, and they, in their turn, prevent the key from jarring out.

The inventors say: We do not claim as our invention the application of a key to a chair to deaden the sound, &c.

Nor do we claim placing the spike holes so that the spikes will catch in the notches in the rails.

But we *claim* the placing of the spike holes nearly or directly under the key, so that the spike heads can come in contact with it, and the spikes themselves pass through the notches in the rails, if desired; and thus causing the key to hold the spikes from working up; and also, in the manner described, causing the spikes to prevent the key from working out.

No. 17,773.—ROBERT ARCHER, of Richmond, Va.—*Improved Machine for Making Railroad Chairs.*—Patent dated July 14, 1857.—As the spur wheels C are rotated back and forth, the cutters A cut the lips of the chair, which rests upon the bed H; and when this operation is performed, the swages B accurately bend down the lips upon the mandrel. The levers D serve the purpose of centralizing and adjusting the chair plate when placed on the mandrel resting on the support H.

Claim.—The use of the swages B, constructed and operating in the manner specified, and operating in connexion with the adjusting levers D, whereby uniformity in length of the lips is secured, without reference to the length of the plate.

No. 16,813.—ZALMON B. WAKEMAN, of Beloit, Wis.—*Improved Mode of Supporting the Tongues of Coaches.*—Patent dated March 10, 1857.—The rods F F are attached to the perch A at G, and slide through the braces J J. The spiral springs E surround the rods, abutting against the braces at one end, and against set nuts H at the other end; by adjusting the nuts upon the screw-threaded portion of the rods, the springs will be more or less compressed, and thus hold up the perch with more or less force. The springs and rods also serve to steady the perch in a lateral direction.

Claim.—I desire the use of the brace or braces, or their equivalent, attached to the reach (or perch) of a wagon or other carriage, in combination with a spiral spring, or spiral springs, applied to the tongue of a wagon or other carriages, and pressing against the reach; for the

purpose of giving direction and steadiness to the tongue, by checking its motion sidewise, keeping it in a straight line with the reach, (or perch,) while it supports it, and also preserving the set of axle in its true position, as set forth in the specification.

But I do not claim a patent for raising or sustaining the tongue in itself, as this has been done before in various ways; but I claim the arrangement and combination of parts, as set forth, for the purpose of giving direction and steadiness to the tongue while it supports it; nor do I claim said parts, or any other arrangement or combination of parts not used or described in this specification.

No. 16,408.—Augustus Stoner, of Mount Joy, Pa.—*Improved Mode of Tightening Fellies in Wheels.*—Patent dated January 13, 1857.—Two chucks A are inserted into the shrunken felly, and forced apart by means of a pair of wedges E; the chucks A resting on the tire F of the wheel. The centre wedge D is then driven in, the side wedges E are withdrawn, and their spaces filled with molten metal; after which the centre wedge D is withdrawn, and its space filled with metal.

Claim.—The construction and operation of the metallic cheeks A, when constructed as described. Also, the manner of securing them in their place, when applied to the fellies of wheels, by the use of melted metal of any kind filling the grooves *b b* to keep them secure in their place, substantially in the manner and for the purpose set forth.

No. 18,998.—Elisha Waters, of Troy, N. Y.—*Improvement in Head-Rests.*—Patent dated December 29, 1857.—A represents a strap of sufficient length to pass around an ordinary car seat back B, and furnished with a buckle C and loop *d*, if so desired, to unite it thereto. A socket *a* is formed on the strap by doubling the material of which it is composed at the desired point, or by sewing or otherwise affixing thereto any proper material. Into this socket or long loop *a* the end *c* of the bar D is inserted and supported, and may be lowered or raised to give the head support the proper height. To the bar D is hinged at *e* a second bar E, the upper end of which fits into a socket, formed in the head supporter F. A loop *i* is placed in the bar E, so that when the two bars are straightened out, said loop may slip over the projection *n* of the lower bar, and thus hold the two bars in their straightened out position.

Claim.—The within described folding portable head-rest for car and other seats, when made adjustable in, on, or by a strap buckled or otherwise fastened to the back of the seat, as set forth.

No. 17,206.—Joseph T. Curtis, of New York, N. Y.—*Omnibus Coffer.*—Patent dated May 5, 1857.—When the coffer G is raised to a level, as represented in fig. 3, or in dotted lines in fig. 1, the driver, by operating this apparatus slightly, raises handle J, so as to disengage the spur L, and, pushing back the rod I, causes the coffer G to descend into the body of the vehicle; whence, after receiving its fare, it is withdrawn by a reverse motion of the rod I, and restored to its original

position, in which it is secured by spur L, and thus brought within ready reach of the driver's hand, through hole C.

Claim.—The application and employment of a movable transmitting coffer, substantially such as described, in combination with omnibuses and other vehicles, when used in the manner substantially and for the uses mentioned.

No. 18,615.—JESSE URMY, of Wilmington, Del.—*Improvement in Revolving Snow Excavators for Railroads.*—Patent dated November 10, 1857.—The claim and engravings show the nature of this invention.

Claim.—1st. The obliquely set side paddle-wheels C C, whose axis lies in a plane vertical to and at right angles with the track, and diverges downward from a point over the centre of the track, and whose arms, radiating in a plane at right angles with said axis, have upon their extremities edged or toothed paddles *e e*, so arranged as that each one shall, when at the lowest point of the plane in which it revolves, be in a horizontal plane and oblique to the rail of the track, substantially as and for the purposes set forth.

2d. The central paddle-wheel E, revolving in a vertical plane at right angles with the track, in combination with the obliquely set side paddle-wheels C C; the whole arranged substantially as and for the purpose described.

No. 17,751.—EDWIN F. SHOENBERGER, of Germantown, Pa.—*Shaft Coupling.*—Patent dated July 7, 1857.—When the shaft B is to be attached to the carriage, the levers D are lowered until the groove L of roller E is set opposite to the opening N of the eye F, and the bolt C of the shaft iron B is dropped into the groove L; the levers D are then buckled to the shaft B, to hold the India rubber springs J, for the purpose of preventing rattling.

Claim.—The combination and arrangement of the levers D D with their half roller E, box *m*, clip G, and slot H, substantially as described, for the purpose of being applied to shaft couplings for safety and to prevent rattling.

No. 16,577.—J. M. BATCHELOR, of Foxcroft, Me.—*Improved Mode of Attaching Thills to Sleighs.*—Patent dated February 10, 1857.—The object of this improvement is to adjust the thills of a sleigh at any point to suit the circumstances of the track.

The inventor says: I am aware that thills have been previously attached to sleighs in such a manner that the thills may be adjusted or moved to either side of the sleigh; but the modes previously adopted have been complicated, and the thills could not be adjusted without considerable difficulty. My improvement is extremely simple, may be applied to sleighs at a small cost, and the thills may be adjusted with the greatest facility.

I *claim* attaching the thills G to the bar E, which bar is fitted within a grooved bar D attached to the sleigh, the bar E being allowed to slide within the grooved bar D, and secured at the desired points by the spring catch H, substantially as described, for the purpose set forth.

No. 17,232.—LEWIS B. RANDALL, of Penn Yan, N. Y.—*Improvement in Sleighs and Cutters.*—Patent dated May 5, 1857.—The nature of this invention will be understood by reference to the claim and engravings.

Claim.—The parts designated by the letters A, B, C, D, E, F, G, H, I, L, and *o*, combined as and for the purposes set forth.

No. 18,882.—NEWCOMB DEMARY, Jr., of Attica, N. Y., assignor to JAMES YATES, of Philadelphia, Pa.—*Improvement in Snow Ploughs.*—Patent dated December 15, 1857.—The claim and engravings explain the nature of this invention.

The inventor says: I *claim*, 1st. The combination of the mould-board and the inclined plane elevator, open at the sides, and so arranged as to elevate the snow from the track, about to the level of the top of the surrounding snow, before it is pressed laterally by the mould-boards.

2d. The side cutters E E, arranged so as not to project in front of the elevator, or to obstruct the lateral escape of snow at the side of the elevator, in the manner and for the purpose substantially as above described.

No. 18,903.—ANDREW HOTCHKISS, of Sharon Valley, Conn.—*Improvement in Railroad Snow Plough.*—Patent dated December 22, 1857.—The claim and engravings will explain the nature of this invention.

Claim.—1st. The employment of a plunger, composed substantially of a frame D and share E, which is moved back out of the way when the machine is driven into the snow to receive a load, but which may be pushed forward to force out the snow when unloading; the whole consisting of a snow plough and excavator capable of being directly loaded and unloaded by the force of the locomotive.

2d. The combination of the cutting frame H with the frame B, as described; so that after the machine has been run into the drift and filled, the cutting frame H may be swung over in front and made to cut down through the snow, thus completely detaching that portion contained in the machine from the main body of the drift.

No. 17,314.—ZE BUTT, of Lincolnton, N. C.—*Improved Hand Truck.*—Patent dated May 19, 1857.—This truck can be loaded in the same manner as a common wheelbarrow; or if the articles are loose, such as grain or sand, the truck is placed in position as represented in the engraving, and the scoop D is thrust under the article to be loaded. To unload this truck, the notch *t* is removed from its connexion with the cross-piece *h*, and the body can be tilted, as represented in dotted lines.

Claim.—The manner described of constructing, arranging, combining and operating the dumping truck, or any other manner or method essentially the same.

No. 18,865.—C. W. SALADEE, of Columbus, Ohio.—*Improvement in Bracing Springs for Vehicles.*—Patent dated December 15, 1857.—

The rear ends of the springs *a a* are permanently combined with the hind axle, and the forward ends of said spring are combined to the bolster *c* over the front axle by means of eyes formed at said ends, which embrace journals at each end of the bolster. This method of securing the said springs to the bolster is to enable the shafts to be permanently secured to the forward axle, and prevent its turning movements from exerting any influence upon the springs.

Claim.—The combination of the central portions of the side springs *a a* with the hind axle by means of the diagonal tension rods *b b*, in the manner and for the purpose set forth.

No. 17,358.—CHARLES ATKINSON, of Danville, Ill., and GILBERT S. MANNING, of Springfield, Ill.—*Improved Construction of Vehicles.*—Patent dated May 26, 1857.—The nature of this invention will be understood by reference to the claim and engravings.

The inventors say: We *claim* the construction of the vehicle shown, viz: the two pairs of springs F F D D attached to the ends of the front and back axles A B; the springs D of the back axle being attached directly to the bed E, and the springs F of the front axle A attached to the bed E by the ball and socket joint; the inner ends of said spring F being attached to a plate G, provided with a friction roller C, which rests or bears upon a segment guide H.

We do not claim separately, or in itself considered, either of the parts above named, but only the several parts when considered as a whole, and arranged as described.

No. 17,918.—S. T. J. COLEMAN and J. W. SIBBET, of Cincinnati, Ohio.—*Improved Coupling of Thills to Vehicles.*—Patent dated August 4, 1857.—The nature of this invention will be understood by reference to the claim and engravings.

Claim.—Securing or adjusting the heads A in the loops or hooks B by means of the boxes C and bars D provided with the screws E, substantially as and for the purpose set forth.

No. 18,426.—W. D. MAYFIELD, of Bloomington, Ill., assignor to S. D. PORTER, of Clarksville, Tenn., and W. D. MAYFIELD, of said Bloomington.—*Improved Mode of Detaching Horses from Vehicles.*—Patent dated October 13, 1857.—In the drawing, A is the whiffletree, having the piece *a*, with double inclined planes *b* suspended between jaws *c*, attached to the rear of the whiffletree; *d d* are the pins over which the trace loops pass; plates *e e*, attached to rods *f f*, held by eyes *g g*, pass over these pins; and when the trace is attached, the plate is against the end of the whiffletree, as shown in the drawing. These rods *f* abut against the flanges *b b*, and move outward when the piece *a* is lifted by the cord *h*. This moving outward of the rods *f* throws plates *e e* from the ends of the whiffletree, and causes them to throw the trace clear of pins *d* when the horse is detached.

The inventor says: I *claim* the swinging piece *a*, with flanges *b*, as described; in combination with the plates *d d* and rods *f f*, operating together as and for the purposes set forth.

No. 16,625.—DARIUS BABCOCK, assignor to THOMAS HARROP and DARIUS BABCOCK, of Homer, N. Y.—*Improved Arrangement of Springs for Vehicles.*—Patent dated February 10, 1857.

Claim.—The combination of the C-springs B B and sinuous spring D, connected by rigid bars E to the body of the vehicle, substantially as shown and described.

No. 18,077.—PHILIPE BAILLAU, of New York, N Y.—*Improvement in Thills for Two-wheeled Vehicles.*—Patent dated September 1, 1857.—The object of this invention is to prevent the constant jolting caused by the motion of the horse being felt by the occupant of a two-wheeled carriage.

Claim.—The flat spring *a*, or its equivalent, at the back end of the thills *b*, arranged and operating in the manner and for the purpose substantially as described.

No. 18,386.—MELVIN C. CHAMBERLIN, of Johnsonsburg, N. Y.—*Improved Wagon-Brake.*—Patent dated October 13, 1857.—In this improvement, when the brake wheel A comes in contact with the wheel of the vehicle in its forward motion, the ratchet on the ratchet wheel B will prevent its moving, and it becomes a stationary brake block; but when the motion of the wheel of the vehicle takes a backward motion, the pressure on the wheel A is removed, and not being obstructed by the ratchet, it turns around freely with the wheel of the vehicle, and thus offers no resistance to its backing.

The inventor *claims* the arrangement of circular, revolving, or stationary brake wheel A with ratchet wheel B and ratchet C; the ratchet so operating the ratchet wheel, when in use, that the wheel A will change its position every time the brake arms, being acted upon by the pressure of the wagon on the horses, are reversed; wheel A being a stationary brake block when the wagon is going down hill, but revolving with the wheel when the wagon is backed.

No. 17,493.—M. C. CHAMBERLIN, of Johnsonsburg, N. Y.—*Improved Self-acting Wagon-Brake.*—Patent dated June 9, 1857.—In going down hill, the vehicle presses against the horse; this brings the weight of the vehicle on the neck-yoke P, consequently operating chain N, which runs over pulley M, rod L, chain K, rod I, and levers H, which, being pivoted in the bearer E, press against the ends of the brake bars G, which are thus moved together with slotted arms O up to the wheels A, thus arresting the motion of said wheels.

Claim.—The arrangement of brake bars G, slotted arms O, and levers H, when used for self-acting brakes for vehicles; all operating in the manner and for the purposes set forth.

No. 17,369.—W. D. GUSEMAN, of Morgantown, Va.—*Improvement in Wagon-Couplings.*—Patent dated May 26, 1857.—The distance between the axles A and B can be increased or diminished by adjusting the piece G and the reach C, and the leverage in regard to pivot O will be increased or diminished, causing the hind wheels to follow the track of the fore wheels in a true manner.

Claim.—Coupling the hind and fore wheels of a wagon by means of an adjustable reach C and a correspondingly adjustable piece G on the front hounds, to which the rear hounds are pivoted; the whole being combined and operating together substantially in the manner set forth.

No. 18,438.—MATHIAS Y. COPE and THOMAS J. COPE, of Centrebridge, Pa.—*Improved Dumping Wagon.*—Patent dated October 20, 1857.—The nature of this invention consists in dividing the body of the wagon transversely at or near the centre of its length, and hinging the sections so that they shall be capable of being tilted independently of each other. A sliding locking bar J and hinged catches *a a* being provided to hold the sections in place and together at the line of division, and the framing and bracing being so constructed and arranged as to admit of the body being divided as stated, and still support it perfectly.

The inventors say: We do not claim dumping at the centre of the body by dividing the body longitudinally, or furnishing it with a falling hinged bottom; as such arrangements are common, and not useful in common road wagons or carts which require to be used for hauling various objects or materials which necessarily must be dumped from the end of the body.

But we *claim* the arrangement consisting of the hinged divided body G G^1, framing D D E, bracing K L M, sliding locking bar J, and catches *a a*, or their equivalents, substantially as and for the purposes set forth.

No. 18,431.—JOHN L. BLINN, of Austin, Texas.—*Improved Mode of Constructing the Tires of Wagon Wheels.*—Patent dated October 20, 1857.—To tighten the tires by this invention, all that is necessary is to loosen the screw C, take out one or more, as the case may require, of the slips E, replace the screw, and draw together the space occupied by the slip or slips removed; the result is a pressure of the spokes, pressing all together firmly in the hub, and tightening the wheel and tire at the same time.

The inventor says: I do not claim drawing the ends of the tire together by a screw, so as to reduce its circumference and tighten up the fellies.

But I *claim* the removable slips or plates constructed, arranged, and held in place substantially as described and shown, for the purpose of producing a complete unbroken tire, as it were, and at the same time affording facilities for decreasing the circumference of the same, and thus tightening up the fellies without the labor of upsetting, substantially as set forth.

No. 17,700.—HUGH SLATER, of Auburn, N. Y.—*Improved Brake for Wagons.*—Patent dated June 30, 1857.—The brakes G are applied to the wheels of the wagon by the animals holding back upon the tongue or pole *a*.

Claim.—The peculiar arrangement and combination of devices by *means of* the tongue or pole *a a*, the hinge *b b*, the V-shaped con-

nexion c c c c, the brake rod or bar D D, and the connexions with the brake arms, substantially as described.

Also, the combination of the pole or tongue *a a* and stop-bar *o o* with the sliding bar D D, or its equivalent, whereby the stop is raised when the carriage is backed, and lowered when it is moved forward, substantially as described.

No. 16,523.—JACOB BOYERS, of Grandville, Va.—*Improvement in Couplings for Wagons.*—Patent dated February 3, 1857.

Claim.—In combination with the ordinary coupling pole C of a wagon, the rod, bar, or pole H, connected to the front axle, and passing through the bow or hounds G, and through the rear axle, for the purpose of causing the rear wheels to track after the front ones, and so that the two axles can be coupled shorter or longer, without in any way affecting the proper tracking of the wheels, as set forth.

No. 16,648.—EDGAR HUSON, of Ithaca, N. Y.—*Improved Gearing for Wagons.*—Patent dated February 17, 1857.—The engraving represents the front wheels of the wagon only.

Claim.—So making the frame described as to leave the forward extremities *a a* of said frame open so as to receive the pole or thills *g* between and back of the forward ends of the side springs—thus bringing the animal nearer the wagon, and thereby making the draught easier, and requiring less room in which to turn.

No. 18,242.—PHILANDER GILBERT, of Alexandria, Ohio.—*Improved Apparatus for Loading Logs on Wagons.*—Patent dated September 22, 1857.—This apparatus is placed upon the carriage of a wagon of common construction which has "bolsters" and vertical "stakes." In operating it, a rope or chain is attached to the windlass W, which in operation is passed over the upper side and round the log on the opposite side of the wagon, and hooked into a ring L, the weight of the log keeping the windlass in position. But when the log is taken from the other side of the carriage, the bars C are drawn out and reinserted in the mortises from the opposite direction. Two skids may be placed to form an inclined plane to clear the wheels. After the log is raised and placed in the concaves, the rope can be hooked in the opposite hook and tightened by the windlass to secure the log upon the wagon.

The inventor says: I do not claim any of the parts, separately considered; but I *claim* the peculiar construction and arrangement of the portable frame herein described, when combined with a windlass and its appurtenances, capable of being shifted to either side of a wagon, in the manner and for the purpose specified.

No. 18,448.—CHAUNCEY H. GUARD, of Brownsville, N. Y.—*Improved Wheelwright Machine.*—Patent dated October 20, 1857.—The apparatus, mounted on the plate J, by a slight change of position, and by shifting the operating tools, can perfectly perform the following functions, viz: bore and mortise a hub; bore the necessary number of holes in a felly, and form tenons on the ends of the spokes after they have been driven into the hub, whilst it is supported by the holders

n n. The said apparatus is composed of the chisel and auger-holder *j*, which works in the open-mouthed box *m*, and is so combined with the lever *e* and with the toothed crank wheel *h* that longitudinal reciprocating movements may be separately or simultaneously imparted to said holder. The construction of the apparatus which enables these movements to be accomplished is as follows: A metallic sleeve *y* embraces the central portion of the chisel and auger-holder, and from the said sleeve an inclined arm *l* rises, which terminates in a horizontal journal that receives the toothed wheel *h*, and supports it immediately above the pinion *i*, at the outer end of the chisel and auger-holder.

The inventor says: I *claim* the arrangement of the respective movements thereof with each other and with the frame of the machine, in such a manner that the several parts of the wheel may first be separately operated upon, and then be combined with each other, as set forth.

No. 17,509.—E. N. KILPATRICK, of Byhalia, Miss.—*Improved Wheelwrights' Machine.*—Patent dated June 9, 1857.—The mortise holes are bored into hub M by means of auger O; and after each operation of said auger, the spring *p* is raised to withdraw pin *o* from plate H, and the plate H is turned until pin *o* drops into the next following hole *y* on disk H, when the next mortise hole can be bored into hub M. The length of the spokes can be marked by placing them on the adjustable table E against post *h*, the table E being provided with a proper gauge. The tenons on the spokes are cut by means of a hollow auger Q, which can be secured to auger shaft N.

Claim.—The combined arrangement of the spoke-marking apparatus, cutter frames, gauge rod, and hub-holders, in such relation to each other as to enable the tenons of the spokes to be marked and formed with entire uniformity and unerring accuracy, substantially as specified.

No. 18,138.—JAMES M. DICK, of Buffalo, N. Y.—*Improved Mode of Tightening Tires of Carriage Wheels.*—Patent dated September 8, 1857.—By turning screw-nut G, the wedge E is forced down between the pieces D, expanding the fellies C, and tightening the tire.

Claim.—The combination of the wedge E and bolt F, or their eqivalents, with the fellies and tire, substantially as set forth.

No. 17,532.—JOHN H. WILLIAMS, of Pleasant Hill, Ohio.—*Improved Machine for Setting Tires on Wheels.*—Patent dated June 9, 1857.—The wheel W on which the tire is to be set is placed against the arms E, they being then in a vertical position, as represented in dotted lines in the engravings, and the wheel is fastened to the frame by means of screw lever *l*. The spring rack Q is now pressed to the rear, and the arms P are disengaged from the teeth of said rack; and by pressing down levers P, the ends of levers N are raised, and with them trough N, and the water in said trough comes in contact with the fellies of the wheel. By turning the wheel on shaft C, the fellies are passed through the water, and the wheel is then turned into a horizontal po-

sition by turning shaft B on its bearings *a*, in which position the tire can be put on the wheel.

Claim.—Hanging the frame to which the wheel is secured to a revolving shaft, so that the wheel may be turned up into a horizontal position for the facility of working at it, and then into a vertical position, to bring the perimeter of the wheel into the water trough, substantially in the manner and for the purpose as described.

No. 17,668.—ANTHONY COOLEY, of Paw Paw, Michigan.—*Improved Whiffletree Hook.*—Patent dated June 30, 1857.—To open the hook B, in order to introduce the tug, the snap G has to be forced into position represented in figure 2.

Claim.—Providing the outer extremity of the hook socket A with an open slot C and spring seat D, and fitting the feather spring F and the shank of the snap G in the same, substantially as and for the purposes set forth.

2d. Furnishing internally each of the cheek pieces of the open slot C of the hook socket A with a scroll slot H, and the snap G with two short journals I, and fitting these journals in said slots, and holding them in place by means of the feather spring F, substantially as and the purpose set forth.

No. 17,752.—DAVID A. SMITH, of Washington, D. C.—*Improved Whiffletrees.*—Patent dated July 7, 1857.—By inserting the traces in the slots E, and by then turning lever C to the left, the ends of the rods B and B^1 pass through the eyes of the traces and secure them to the whiffletree.

Claim.—The lever G attached to a movable fulcrum on plate *o* and sliding in slotted plate F, for operating the spring bars B and B^1 alternately, as described and for the purpose set forth.

XI.—HYDRAULICS AND PNEUMATICS.

No. 16,645.—ISAIAH J. HENDRYX, of New York, N. Y.—*Improved Method of Generating Air-Blast.*—Patent dated February 17, 1857.—Figure 2 represents the elevated end of the cylinder with the valves *v v* and the chambers F F^1, the upper two F F being filled with air, and the lower two F^1 F^1 being filled with water, K K being the water level; figure 3 represents the lower or immersed end of the cylinder.

The inventor says: I *claim*, first, the cylinder constructed with a hollow shaft A, and divided into compartments B B B B, either on a line with the shaft or spirally around it, said cylinder being partly immersed in water or other liquor, and revolving at an angle as described.

Second. The cylinder with or without a hollow shaft, and extending the air chamber F above and around the cylinder, said chamber pass-

ing far enough below the water line to prevent the escape of the air; the air being supplied to the cylinder through the hollow shaft, or by pipes passing along it to the outside of the chamber, said pipes having valves opening inwards or immersing, as described.

Third. The cylinder revolving at an angle without being immersed with the liquor inside said cylinder, as described.

Fourth. The application and use of the cylinder, its case, and contents, as herein described, for the purpose of passing air through hydrocarbons and their vapors, or mixing air with other gases, for heating or illuminating, or any other purpose requiring a steady blast. I do not limit myself to the form of a cylinder, but claim any other shaped vessel, constructed of metal or other material and operated as herein described, which will produce the intended effect.

No. 17,664.—JOHN BRAUGH, of Aurora, Illinois.—*Improved Blast-Blower.*—Patent dated June 30, 1857.—The hoods *i* serve to catch the air as the plates *b* are rotated and cause it to be forced within the wheel, the bucket or piston *d* forcing the wind out through orifice *a*.

Claim.—The wind or blast wheel constructed of the circular plates *b b*, having openings *h* made through them, and provided with hoods *i*; the plates having a bucket or piston *d*, one or more, secured between them; when the wheel thus constructed is fitted within the fan box A constructed in the form of a scroll, substantially as described, for the purpose set forth.

No. 16,736.—ROBERT LEITCH, of Baltimore, Md.—*Improved Basin Cock.*—Patent dated March 3, 1857.—The object of this improvement is to prevent leakage.

Claim.—The arrangement of the loose stop piece *c*, constructed with a male screw thread on the periphery, and the means for operating it vertically without turning by the fixed square F on the stem A, and a corresponding female screw thread, or its equivalent, in the rotating globe of the cock B, substantially as and for the purpose set forth.

No. 17,539.—EDWARD G. BURNHAM, of Springfield, Mass., assignor to Himself and HENRY A. CHAPIN, of the same place.—*Improved Valvular Arrangement for Basin, &c., Cocks.*—Patent dated June 9, 1857.—By turning the nozzle B of this hydrant, the cam *a* will operate the cam *b* of pipe D, forcing pipe D downward beyond the casing A^2, and the water in pipe A^1 can pass through passages *e*, and escape through nozzle B. On returning the nozzle to its first position, the spring *g* presses pipe D upwards, thus closing the passages *e*.

The inventor says: I do not claim operating a valve by means of a cam, as this is found in various faucets.

Nor do I claim a faucet or basin cock as made with a turning bib or nozzle, and a tubular stem having a rotary valve working against a concentric seat, as such is liable to leakage.

But I *claim* the described new manufacture of basin cock or faucet as made with a turning bib or nozzle, a sliding valve, and a tubular stem, operated by means substantially as described.

No. 17,433.—Lucius J. Knowles, of Warren, Mass.—*Improved Faucet.*—Patent dated June 2, 1857.—This faucet may be inserted into the vessel from which the liquid is to be drawn by screw *a*, and the faucet can be opened or closed by operating valve-stem B and valve C, the spiral spring *h* tending to keep it constantly closed. When the faucet is to be opened, the hooks on clutch *i* are hooked together, which will keep the valve C open; and as the liquid escapes through passage *b*, the pressure will force it between the shoulder *f* and the body A, and, passing into space *d*, it eventually escapes by the drip passage D.

Claim.—Combining with or arranging with respect to the valve stem and eduction passage of the body of the faucet, as described, the secondary chamber or drip passage D, the same being for the purpose or to operate as specified.

Also, arranging an annular groove *g* in that part of the valve stem which slides in and out of the recess *d* of the body of the faucet, the same being for the purpose as specified.

No. 17,604.—David N. B. Coffin, jr., of Newton Centre, Mass., assignor to the Boston Faucet Company.—*Improved Faucet.*—Patent dated June 16, 1857.—By turning handle A, the piece K can be turned, when the lifters J begin to act upon pin *k*; and the guide *g* preventing it with the valve-stem from being turned around, the valve *b* is lifted from its seat, until the pin has reached the highest point of the inclines; when, if turned either way, it will close again, or if left on either incline it will close itself by the force of the India rubber spring *e*.

Claim.—The combination of the annular lifter or lifters, guide, and pin, substantially as described, with or without the top incline for closing the valve shown in fig. 3. I also claim pivoting the annular lifter or lifters at *m*.

No. 17,342.—Erastus Stebbins, of Chicopee, Mass.—*Improved Basin Faucet.*—Patent dated May 19, 1857.—By turning discharge tube A and spindle B, projection *h* is carried against projection *i*, and the valve C is raised, permitting the fluid to escape through passage *g*, pipe G, and tube A. By reversing the motion of spindle B, the valve is depressed by the action of cams *k l*, and the flow of the fluid is stopped.

Claim.—Combining and arranging the tubular bearer K with the spindle, the valve case, and adjusting screw, substantially in the manner and for the purpose specified. The combination and arrangement of the elevating and depressing cams, or their equivalents *h i k l*, and the plane or bearing surfaces *m n*, the same being applied to the spindle and valve, and made to operate together, essentially in the manner as explained.

No. 17,511.—William C. Marshall and Horace W. Smith, of Hartford, Conn.—*Improved Basin Faucet.*—Patent dated June 9, 1857.—The pipe B leads to the boiler containing the hot water, and the pipe H to the cold water reservoir. By turning the nozzle to the position 1, in fig. 2, the hot water can pass from pipe B, up through slot E, at the same time that slot K is covered, and the passage of the cold water is prevented. When the nozzle is turned to the position

2, in fig 2, the cold water can pass through slot K, and the slot E is closed up, thus preventing the passage of hot water through the nozzle.

Claim.—The arrangement, application, and combination, as herein described, for drawing hot or cold water through one nozzle, in the manner and for the purpose substantially as set forth and described.

No. 18,091.—HENRY GETTY, of Brooklyn, N. Y.—*Improved Device for Locking Faucets.*—Patent dated September 1, 1857.—When the ends of the bar F are in the vertical grooves *e e*, the valve B is retained in a closed state by spring E, and the pressure of the fluid against acts the under side of the valve; the valve being opened by pressing no part *c*.

Claim.—In combination, the L-shaped grooves *e h*, at the upper part of the spring barrel, stop bar *f*, and the secret stop arm K, placed loosely over the valve-stem, and attached to the screw collar; whereby facilities are offered for fastening the faucet closed, and also, when necessary, of placing it beyond the control of servants and others not entrusted with its management.

No. 17,074.—JAMES E. BOYLE, of Richmond, Va.—*Improved Wasteway in Faucets.*—Patent dated April 21, 1857.—When the liquid is to be drawn from P to P^1, the handle I of the cock is turned parallel with the pipes, as represented in fig. 2. When the flow is to be stopped, the handle I is at an angle of 90° with the pipe, as represented in fig. 1; in this latter position the liquid remaining in the pipe P will flow out in passing into the recess *r*, through channel *m*, and *c* through the way W and orifice *o* into a reservoir, placed there for the collection of the waste.

Claim.—The recess *v* and orifice *o*, in combination with the channels *m c*, when constructed and arranged in relation to the ordinary component parts of the stop cocks in the manner specified.

No. 17,973.—JOHN C. MACDONALD, of Cincinnati, O.—*Improved Valvular Arrangement in Faucets, &c.*—Patent dated August 11, 1857.—The opening and closing movement of the valve H is effected by turning screw C in one or the other direction.

Claim.—The arrangement of the valve-stem H^1, the nut *o*, the valve guide F, the screw C, and the cap or screw and nut guide Q, which also contains the stuffing box *m*, for the purposes set forth.

No. 17,987.—JOHN A. THOMPSON, of Cayuga, N. Y.—*Improved Filter.*—Patent dated August 11, 1857.—The water passes from the receiving vessel A, through the holes near the bottom of said reservoir, then through the filtering material in the cask, and through the holes near the bottom of the reservoir B, whence it can be drawn by means of faucet H.

The inventor says: I do not claim the ordinary cask filter with pot or reservoir, with attachable metallic air and draught tubes, the whole fitted with charcoal, alternated with gravel, sand, &c.; the same having been known and used.

But I *claim* the combination of the receiving vessel or upper filter; the reservoir with flange or rim F, and attachable air and draught pipes to same, substantially as described; not confining myself to any particular mode or material which shall produce like effects and results.

No. 18,031.—WILLIAM W. AYRES, of Worcester, Mass.—*Improved Filter.*—Patent dated August 25, 1857.—The casing C being attached to the discharge pipe of a hydrant by means of screw *a*, the water passes through passages *e n* into cylinder B, and, passing through the filtering medium *c*, finally escapes through passage F, as represented by arrows in fig. 1. By turning the spindle S 180°, the water will take the course as indicated by arrows in fig. 2, will pass through the filtering medium from the outside, will remove the impurities adhering to it, and carry them off through passage F.

Claim.—The combination of cylinders B and C with the spindle S, when constructed with reception and discharge cavities *d f*, openings *e g*, and channels *m n*, m^1 n^1, arranged and operating substantially as and for the purposes set forth.

No. 17,028.—BENJAMIN NADAULT DE BUFFON, of Paris, France.—*Improved Apparatus for Filtering Liquids.*—Patent dated April 14, 1857.—The metal tube A is surrounded by a cylinder F of wire gauze, containing charcoal or other filtering material. The apparatus, which may be immersed in or float upon the impure water, allows the latter to pass through the external wire gauze and the filtering materials, to the internal perforated tube A, which it reaches in a purified state, and from which it escapes through pipe or hose E, the air tube C admitting air to tube A, and insuring a constant flow of the water. The filtering material is compressed by means of the staves H and tightening hoops I, and also by the heads K, which are connected to each other by means of rods, and which can be tightened by screws and nuts.

Claim.—First. The general arrangement and construction of tritular apparatus for filtering water and other liquids, as described and shown.

Secondly. The mode of constructing stationary and tubular filters, in which the impure water to be clarified is passed from the exterior to the interior of the filter, as described.

Thirdly. The compressing of the filtering material, as described.

No. 16,330.—JAMES FERNALD, of Boston, Mass.—*Improved Method of Attaching Filters to Supply-Pipes.*—Patent dated January 6, 1857.—The cocks B and C of the main pipe being open, and the cocks G and I of the waste and connecting pipes being closed, the unfiltered water enters the main pipe A, and is pressed upwards through the filter in a purified state. When the filter is supposed to have become clogged, the cock B is closed, and cocks I and G are opened; the water will then rush up through pipe H, down pipe A, carrying with it all foreign matter which may have collected in the lower part of the filter, and escaping through waste pipe F.

Claim.—The combination with the main water pipe of a house, of a filter, an auxiliary pipe, and a waste pipe; the pipes being provided

position, when, by the action of spring P on pin R, the lever *h* is agitated, moving valve *g* to the opposite side of the valve chamber, thereby causing the water to take an opposite direction through the metre. The water enters the metre through pipe X, is measured by the process described, and is finally discharged through pipe *b*.

Claim.—The arrangement of the piston with the parts employed for moving the valve *g*, all arranged as represented, and for the purposes mentioned.

No. 17,394.—WILLIAM A. ROYCE, of Newburgh, N. Y.—*Improved Machinery for Compressing Gaseous Bodies.*—Patent dated May 26, 1857.—By the downward motion of piston *b* and piston rod *a*, cold air enters the valve *h* of the piston rod, and, passing up into the hollow piston *b* around the core *c* and up the rod *a*, finally escapes through the passages *d*; this current of air serves to cool the rod and piston during the act of compressing the air. The air enters through the ingress pipe L, and enters the cylinder through the valves *e*, while it is forced out through the valves e^1 and through the coiled pipes *f*, the lower coils of which are placed in water for the purpose of keeping them cool; the air finally passes from pipes *f* into a reservoir for further use.

Claim.—The described apparatus, for compressing or packing gaseous media, substantially as described and shown.

No. 16,450.—LODNER D. PHILLIPS, of Chicago, Ill.—*Improvement in Hose Couplings.*—Patent dated January 20, 1857.—The nature of this invention will be understood by reference to the claim and engraving.

Claim.—The combination of the sections *a a* of the hose coupling (having conical tubes *b b* on the exterior ends thereof) with the conical sleeves *d d*, as herein described, and for the purposes set forth.

No. 16,448.—JAMES G. MORGAN, of Brooklyn, N. Y.—*Improved Hydrant.*—Patent dated January 20, 1857.—By turning handle F, cock G is opened or closed; the air in air chamber C is compressed as the crank H on shaft *i* raises the bottom *d* of said air chamber; and the air then passes through pipe *a* into the cistern B, thereby forcing the water in the cistern into the discharge pipe *b*. By releasing the air chamber from such compression, the water in the discharge pipe *b* will run into the cistern.

The inventor says: I am aware that hydrants have been constructed with cisterns to receive and retain the water at the discharge pipe at a point below the surface of the ground where it will not be frozen; and that they have been provided with flexible and metal pistons, or valves, to force the water again into the discharge pipe when the cock is about to be opened, and to receive the water from the discharge pipe when the cock is closed.

I am also aware that air chambers have been applied to discharge pipes to break the force of the water, and maintain a constant stream; I therefore do not broadly claim such as my invention.

I am not aware that air chambers have been applied to hydrants in

such a manner as to admit of being compressed, and thereby forcing the water from the cistern into the discharge pipe, and, by releasing them from the compression, allowing the water in the discharge pipe to run back into the cistern, and the air in the air chamber to fill the discharge pipe, whereby the machinery and cock can be placed above the ground convenient to access, and whereby the flexible air chamber (which takes the place of the flexible valve or metal pistons used by others) is subject to no greater leakage pressure than what is due from the height of water in the discharge pipe above the cistern.

I *claim* the combination of a cistern to receive and retain the waste water of a hydrant with one or more air or gas chamber or chambers, arranged in such a manner that by compressing the air chamber the air therein will be forced into the cistern, thereby forcing the water in the cistern into the discharge pipe; and by releasing the air chamber from such compression, the water in the discharge pipe will run into the cistern. Nor do I limit my claim to a flexible air chamber, as I consider a piston and cylinder a mechanical equivalent.

I also claim the peculiar method of compressing and releasing the flexible air chamber in connexion with the opening and closing of the cock, substantially as described.

No. 16,536.—WILLIAM FIELDS and SOLOMON GERHARD, of Wilmington, Del.—*Improved Hydrant.*—Patent dated February 3, 1857.—On depressing B, the waste water in cylinder A will be forced up pipe K. As soon as the lever L strikes the end *o* of the valve rod *r*, and begins to lift the valve *p*, fresh water will be admitted and flow up through K.

Claim.—First. The combination of the lever L with the rods R and *r* operating the plungers B and *p* in the manner specified.

Also, the plunger valve V, when arranged in relation to the bent pipe P and constructed in the manner described, and when operated in connexion with the plunger B, and not otherwise, substantially as set forth.

No. 17,093.—ABRAHAM HOAGLAND, of Jersey City, N. J.—*Improved Hydrant.*—Patent dated April 21, 1857.—To operate this hydrant, the crank X is turned, causing the pulley H to force down by friction the hollow rod B with its piston C to the bottom of pipe A. When it reaches the valve D, the crank is turned till the projections N catch upon collar O and then the crank forces down the hollow rod, opening valve D and causing the water to flow into pipe A and out at spout L. When sufficient water is drawn, the crank is released, and the weight G draws piston C up with the water which is in the pipe A, and empties it out at the spout L.

Claim.—First. The emptying of the pipe A by a self-acting valved piston C with hollow rod B, in the manner described.

Second. The construction and use of the valve D, made of an ordinary bevel winged valve, with the flexible valve E added at the bottom, and the cushion P added at the top, for the purpose described.

Third. The combination of the catch N upon the large friction pulley H with the collar O, to enable the operator to force down, by the

crank, the piston upon the valve D, and open it against pressure, as described.

No. 17,415.—WILLIAM W. BINNY, of Seneca Falls, N. Y.—*Improved Hydrant.*—Patent dated June 2, 1857.—When the lever *l* is left free, the hydrant is closed by spring *h*, in connexion with the pressure of water, keeping the valve *f* snugly up against its seat *e*. When the pipe D is forced downward by actuating lever *l*, the water will rush through the passages formed by the concave sides of the valve, and pass through the holes g^1 up through the pipe D; the leather *j* fitting over the upper end of tube *d* prevents the water from escaping into the case A from between the tube *d* and pipe D. On releasing lever *l*, the pipe D will ascend, and the water within the pipe D will descend and pass upward between the neck *d* and pipe D, and escape into the case A.

Claim.—The pipe D fitted within the case A and within the tube or neck *d*, the pipe having a flanch or collar *i* upon it above the neck *d*, and provided with a valve *f* at its perforated lower end, said pipe being fitted within the neck or tube *d*, and used in connexion with the box or chest C and spring *h*; the whole being arranged, as shown, for the purpose set forth.

No. 17,552.—JOEL BRYANT, of Brooklyn, N. Y.—*Improved Hydrant.*—Patent dated June 16, 1857.—By turning handle H so as to bring the passages *g* over the passages *e*, the water can enter the hydrant from the supply pipe L; and by turning the handles so as to bring the passages *g* over passages *d*, the water from pipe L is shut off from the hydrant, and the water in said hydrant can escape through passages *d* into a sewer or reservoir, thus leaving the hydrant entirely empty when not in operation.

The inventor says: I do not claim anti-freezing hydrants or water pipes.

But I *claim* hydrants and water pipes with two main cylinders A and B, and a cylindrical bottom part F, with openings *g g* in cylinder B, and openings *e e* and *d d* in the bottom part F, operating in connexion with each other for the admission and discharge of water, substantially as described and for the purpose set forth.

No. 17,632.—GEORGE P. PERRINE and JAMES E. BOYLE, of Richmond, Va.—*Improved Hydrant.*—Patent dated June 23, 1857.—By turning level K downward, so as to move pipe R and plunger P, and *p* downward to the position represented in dotted lines, the piston *p* has cleared the orifice *o*, and the water enters pipe R, and escapes through passages *x* and nozzle N. When the lever K is released, the pressure of the water forces piston P upward to its former position, and by this movement a partial vacuum is created between pistons P and *p*, and the water in pipe R escapes through passages *x* into cylinder A, thus keeping the pipe R empty when the hydrant is not in use.

Claim.—The hollow piston rod and nozzle, when so constructed and arranged, in combination with cylinders of unequal diameters and their corresponding pistons or plungers, that they will be elevated by

the pressure of the water from the supply pipe upon the under surface of the piston *p*, and the water withdrawn therefrom, for the purpose specified.

No. 17,538.—WILLIAM BRAMWELL, of New York, N. Y., assignor to SAMUEL P. AYRES, of New Rochelle, N. Y.—*Improved Method of Incasing Hydrants.*—Patent dated June 9, 1857.—In case of accident, the whole of this hydrant can be lifted out of the casing *c*, after having unscrewed the screws *p*.

Claim.—The casing or pipe C, with its seat *e* and elastic washer *f*, in combination with the hydrant pipes *g* and screws *p p*, substantially in the manner and for the purposes specified.

No. 17,447.—AUGUST F. W. PARTZ, of New York, N. Y.—*Improved Hydraulic Blast Generator.*—Patent dated June 2, 1857.—The vessel *a*, being filled with water to about the height of shaft *h*, and power being applied to pulley *k*, the wheel *c d e* is revolved in the direction indicated by the arrow; the coiled compartments 3 successively take in, through their openings at the periphery, portions of air and water, which are forced towards the centre of the wheel, whence they are discharged through the hollow shaft *f* into chamber 1, the water flowing back through opening 4 into chamber 2, and the air, under the pressure of the water in compartments 3, passes out through opening 5.

The inventor says: I do not claim a wheel or cylinder composed of coiled or turbinated compartments, which communicate with a hollow shaft.

Nor do I claim a vessel containing the fluid wherein said wheel is partially immersed.

I *claim*, 1st. The arrangement of the several parts of my machine.

2d. A chamber attached to and communicating near its bottom with the vessel enclosing the wheel, into which chamber the hollow shaft of said wheel opens and discharges, and which contains one outlet for the air accumulating in its upper part, substantially in the manner and for the purpose described.

No. 18,280.—JOHN D. HEATON, of Dixon, Ill.—*Improved Hydraulic Engine.*—Patent dated September 29, 1857.—The operation of this engine is as follows: Being situated at the terminus of a water channel having a sufficient fall, and arranged so that the running volume of water shall be conducted through pipes or tubes, and enter into the central tube P^2 of the air chamber, and thence pass down through the neck *o o*, enter and fill the hollow valve *k k*; observing that, on starting the engine, the valves must be open, or past the dead point, as shown in fig. 3. Having charged the engine with water throughout all its ramifications, the balance wheel is set in motion; this causes the cylinder part and chambers to oscillate around the stationary valves, which movement causes the ports *h h* alternately to be opened and closed above and below, the position of the stationary valves being as shown in fig. 3.

The inventor says: I *claim* the peculiarly constructed form and

application, and the arrangement of the stationary valves *k k m n o*, as operated.

I also claim the construction and arrangement of the water chambers *e e e*, pressure compartments *g g*, and cylinder *f f*, combined in one single piece, substantially as shown and described.

No. 16,756.—HOMER H. STUART, of New York, N. Y.—*Improved Method of Operating the Supply and Discharge Valves of Hydraulic Engines.*—Patent dated March 3, 1857.

Claim.—Arranging the four flap valves on the rock shaft R, to operate in the separate compartments of the two valve boxes F, placed at one end of the cylinder, and operating the same by means of the sliding arch piece G, connected with arms at opposite ends of the said rock shaft R, and driven by the vibrating arm D of the main rock shaft B of the engine, substantially as set forth.

No. 16,801.—GEORGE LINSAY, of New York, N. Y.—*Improved Hydraulic Jack.*—Patent dated March 10, 1857.—The solid arrows show the direction of the water when acted upon by the pumps, and the dotted arrows show the direction of the water when the plunger D is depressed. The jacket is filled with water through a cock *a**.

The inventor says: I do not claim the device or arrangements of the pumps or working parts, or the safety and lowering valve.

Nor do I claim the device or arrangements of the piston rod H or of the ram D.

But I *claim* the arrangement of them all combined, as constituting the specific whole machine, as shown and set forth.

No. 18,912.—ALONZO R. KETCHAM, of Buffalo, N. Y.—*Improved Hydraulic Valve.*—Patent dated December 22, 1857.—This invention consists in providing a chamber, in connexion with a water pipe A, or cylinder, for the purpose of affording protection to and allowing of a sufficient movement of a geared sector C, the sector being connected with a valve B, and operated by a worm or screw D.

The inventor says: I do not claim the combination of the screw D, geared sector C, and valve B, when broadly considered.

But I *claim* the arrangement of the chamber F on the pipe or cylinder A, for the purpose of protecting the sector and valve, and to allow of a proper movement thereof, the same being operated by the screw D, or equivalent, as described.

No. 17,383.—FRANCIS C. LOWTHORP, of Trenton, N. J.—*Improved Hydro-dynamic Machine for Testing Strength of Materials.*—Patent dated May 26, 1857.—If it is required to test the tensile strain of a rod X, motion is imparted to crank shafts V and V^1, which, by means of gearings S Q T and T^1, cause the screw shafts O to turn, drawing the cross-head P towards cross-head N, cross-head V being retained stationary by means of wedges *w*. The piston in cylinder K, which is attached to piston rod L, compresses the water which is between said piston and the cylinder head *g*; which acts upon a pressure gauge *M, and* thus indicates the amount of strain applied to rod X.

The inventor says: I do not desire to confine myself to the precise form of the framework, or to the material of which it is constructed, to the precise arrangement of gearing shown, or to any particular construction of indicator; as the system of gearing may be modified without altering the result, and as a weighted valve or other indicator may be used instead of a pressure gauge.

But I *claim* the combining of gearing and other suitable mechanism for applying strains for forces to the object to be tested, with a piston or plunger operating against a body of water within a cylinder or barrel, in such a manner that, on applying the said force or strain, such a pressure shall be transmitted to the fluid, and to any suitable indicator communicating with the same, that the amount of strain or force on the object may be readily calculated.

No. 16,983.—Otto G. Leopold, of Cincinnati, Ohio.—*Improved Liquid Metre.*—Patent dated April 7, 1857.—The water enters this metre through pipe *a*, and passes through the apertures a^1, by which it is divided into several jets, and is conducted to the circumference of the floating wheel *c*, which is rotated by the action of the water on its curved buckets. The worm *g* acts upon a worm wheel which operates spindle *h*, said spindle being connected with an indicating apparatus in the usual manner.

The inventor says: I neither confine myself to the materials employed, nor to the particular form or arrangement of the several parts of which the same consists, provided the wheel or drum is peculiarly adapted to the registering of the flow of liquids.

But I *claim*, first, suspending the wheel or drum in the manner described; and floating it, so as to reduce the friction of its bearings to the smallest possible amount; and thus, in addition to the other means before described, rendering it peculiarly adaptable to the registering of the flow of liquids.

Second. Also, the arrangement of dividing the inlet opening into an appropriate number of small apertures, so as to protect the wheel from the gross impurities of the water, and thus prevent its free motion from being disturbed.

No. 17,073.—Absalom F. Boyd, of Muskingum county, Ohio.—*Improved Method of Excluding Air from Liquors on Tap.*—Patent dated April 21, 1857.—The India rubber bag B is attached to pipe A of the bunghole of a cask, and when the barrel is filled with liquor, the bag will float on its surface; and, being of a yielding nature, the atmosphere will press upon the liquor without coming in contact with it.

Claim.—The application of the bag B to a cask or barrel, as shown and described; for the purpose of preserving the flavor of liquors by excluding the atmosphere from them when the cask is on "tap," as described.

No. 16,558.—Ambrose Tower, of New York, N. Y.—*Improved Pump.*—Patent dated February 3, 1857.—G is the air chamber; A A

are the pump barrels, and C C the pistons; B B are wires to prevent the ball valves D from rising too high.

The inventor says: I do not claim the raised or projective valve seat and ebb water as new, when the water and other fluids, substances, &c., are not discharged from the water-way L, below the surface of the top of ihe valve seat; as it will be perceived that foreign or heavy substances will flow over the valve seat, and soon fill the ebb water-way, and then come in contact with and choke the valve; therefore,

What I *claim* is, the raised or projective seat K, and ebb water-way L, when the water, &c., is discharged from the ebb water-way below the surface of the top of the raised or projective seat, thereby allowing all foreign or heavy substances that flow over the seat to be instantiy forced out; consequently the valve at all times has free play, and cannot become choked.

No. 16,785.—JOHN F. BRICKLEY, of Winchester, Ind.—*Improvement in Converting a Lifting Pump into a Suction and Forcing Pump, or vice versa.*—Patent dated March 10, 1857.—Fig. 1 represents the arrangement of parts, when used as a common lifting pump, of which B is the ordinary foot valve, and F the nozzle. To change it into a lifting and forcing pump, the rod D is detached from the handle C, and it is turned round (there being a screw thread at its lower end, and a female nut *b* attached to the valve box E) until its lower end abuts against the flap valve *d*, as shown in fig 2. E acts now as a solid plug, and the water will be forced up through pipe G.

Claim—Arranging a rod in connexion with the valve of the pump so that said valve may be closed or opened at pleasure by the user, for converting a ordinary lifting pump into a lifting and forcing pump, or *vice versa*, as set forth, and for the purpose explained.

No. 18,705.—WASHBURN RACE, of Seneca Falls, N. Y.—*Improvement in Pump Packings.*—Patent dated November 24, 1857.—This improvement consists in causing the wedge which holds the two lower valves in place, to serve also as a packing for the oscillating shaft; and in causing the lower valves, in the act of tripping, to strike against the pendulous valve, and trip that also.

The inventor says: I do not claim to be the first inventor of pumps having a hollow shaft and hollow oscillating piston. Nor do I claim tripping the valves E E^1 by means of the oscillating piston C.

But, to the best of my knowledge and belief, it is a new feature in pumps of this description to cause a wedge piece to hold the lower valves in place, and serve also as packing for the oscillating shaft. It is also a new feature to cause the lower valves to trip the pendulous valve.

I *claim* causing the wedge piece G, which holds the two lower valves E E^1 and piece *c* in place, to serve, also, in combination with said piece *c*, as a packing for the oscillating shaft B, as described.

No. 17,516.—ROBERT RAMSDEN, of South Easton, Pa.—*Improvement in Rotary Pumps.*—Patent dated June 9, 1857.—Rotary motion being given to the screw B, the piston D is rotated in consequence of the

projections *m* fitting in the space formed by thread *e*. By this rotation of the piston D a suction is formed behind each projection *m*, and the water is drawn up through pipe *b* into the cylinder A, and is forced out through pipe E. If the screw B becomes loose in the cylinder A by wear, it may be snugly adjusted therein by pressing the larger end of the screw towards the smaller end of the cylinder.

Claim.—The combination of a revolving piston D and taper-shaped screw B, in the manner and for the purpose substantially as described.

No. 17,423.—GEORGE H. CORLISS, of Providence, R. I.—*Improvement in Steam Pumping Apparatus.*—Patent dated June 2, 1857.—The nature of this invention will be understood by reference to the claim and engravings.

Claim.—The arrangement of a series of steam cylinders A and pumps C combined radially around a central crank shaft B, with a central crank N and crank shaft, with which the whole series of pumps and steam cylinders are connected, substantially in the manner and for the purpose herein described.

Also, the method herein described, of forming the connexion between the pistons of a series of cylinders and a single crank pin *a*, by means of a disk-ended connecting rod L, which is appropriated to one piston in the series, and which is fitted with a series of pins S, to which the remaining connecting rods M are applied, thus obviating the direct application of all the connecting rods in the series to the same crank pin.

No. 18,718.—JOHN S. BARDEN, of New Haven, Conn., assignor to Himself and AARON W. ROCKWOOD, of Boston, Mass.—*Improvement in Steam Pumping Engines.*—Patent dated November 24, 1857.—The claim and engravings explain the nature of this invention.

The inventor says: I am aware that it is not new to so combine a pump and a steam engine that the piston of the former may be operated by the latter; also that it is not new to arrange the axis of the cylinder of a steam engine in line with that of the barrel of the pump, and so connect the pistons of the two that a reciprocating rectilinear movement of the steam engine cylinder may create a corresponding movement of the pump piston. Therefore I do not claim such.

I do not claim a partitioned hollow semi-cylindrical chamber, and two series of induction and eduction passages, arranged with respect to the partition of said chamber substantially as described, in combination with three or any other suitable number of oscillatory cylinders and pistons connected together by three connected cranks, and applied to the partitioned semi-cylindric vessel as described, such being the subject of claim in my letters patent, hereinbefore named.

Nor do I claim the rotary pump for which a patent was granted to Hosea Lindsay, December 4, 1855.

Nor do I claim the reciprocating pump represented in Henry L. Russell's application for a patent, rejected October 25, 1854, for in neither of the engines of McMurtrie, Lindsay and Russell is there any three-fold bell; crank and these pumps operating together, and

in connexion with a semi-cylindric case, I employ three pumps, one semi-cylindric case, and with one engine, made as specified; the semi-cylindric case connecting all the pumps together, so that the fluid which each pump may elevate is drawn into one end of the common case, and forced out of the other end of it, while but one three-fold crank is used in the construction of my apparatus.

Therefore, it is this peculiar apparatus, as composed of the three pumps arranged on one common case, and combined with the peculiar steam engine, in manner as described, and so as to make but one three-fold crank necessary to the operation of the three pumps during each entire revolution of the crank, that I *claim*.

No. 16,366.—G. W. B. GEDNEY, of New York, N. Y.—*Improvement in Pumps.*—Patent dated January 6, 1857.—As the piston b^1 descends, it forces the water in the cylinder a^1 through the discharge pipe K, while the induction pipe i is in communication with cylinder a; and at the moment that the motion of said pistons is reversed, the leaf valve h is turned in the position marked in dotted lines, when the water passes from induction pipe i to cylinder a^1, and from cylinder a to discharge pipe k, the movement of said valve being effected by connexions n and n^1 and lever p.

The inventor says: I do not claim a double-action pump, with a slide valve and independent valve motion; as that is not new, but is found in the patent granted to J. H. Webster, February 12, 1854.

But I *claim* the working leaf valve, or four-way cock, constructed as specified, and arranged with respect to the two cylinders and solid pistons so as to give a more direct and unobstructed course to the water, than is obtained in the slide valve pump patented by Webster, in the manner and for the purposes set forth.

No. 16,373.—JAMES S. BURNHAM, of Yorkville, N. Y.—*Improvement in Pumps.*—Patent dated January 13, 1857.—By operating lever I, the air vessel G can be raised and lowered; as the leather B^1 rises, the valve e opens, and the water passes from pail A into chamber J; as the leather is depressed, the valve d opens, and the water in chamber J is forced up through chamber E, air vessel G, and pipe H.

The inventor says: I disclaim the pumping of liquids or other substances by means of a flexible diaphragm, as pumps of this description are old. I disclaim the placing of pump valves under water, or arranging them in any particular manner. I disclaim everything heretofore known in connexion with diaphragm pumps. I also disclaim the use of an air vessel in diaphragm pumps.

I confine myself exclusively to the combination of the air chamber directly with the diaphragm, so that the air chamber rides upon the diaphragm, as shown

In the patent of McPherson & Joyce, 1856, a corrugated diaphragm is used, vibrated by a plunger. I claim no such device, neither is my invention, viz: an air chamber riding upon the diaphragm, anywhere shown in this patent.

In application for a patent of Hyzer & Parks, 1856, rejected, an

ordinary pump is employed, the valves being placed under water. As before stated, I disclaim all such devices.

I am aware that in Chapman Warner's patent, July 7, 1856, the air chamber is attached to and moves with the piston, and I therefore disclaim a movable air chamber.

I *claim* combining the air chamber G directly with the diaphragm B^1, so that the air chamber rides upon the diaphragm, in the manner and for the purposes set forth.

No. 17,327.—SILAS HEWIT, of Seneca Falls, N. Y.—*Improvement in Pumps.*—Patent dated May 19, 1857.—The plunger of this pump is composed of the combined piston head R and tubes E, and valves F^1 and F^1. On the downward motion of the plunger, valve F is closed, valve F^1 is opened, and valve F^1 is closed outward and opened inward; and the water from the lower part of N passes up through tube E, openings S, chamber O, and out through spout P. On the upward motion of the plunger, valve F is opened, and valves F^1 and F^1 are closed; and the water in the lower part of N is forced up, while the water passes from chamber M into the lower part of chamber N.

Claim.—The arrangement of tubes E E, piston head R, and valves F^1 and F^1, constructed and operated in the manner and for the purposes set forth.

No. 17,625.—WILLIAM HENRY HARRISON, of Philadelphia, Pa.—*Improvement in Pumps.*—Patent dated June 23, 1857.—The nature of this invention will be understood by reference to the claim and engravings.

The inventor says: I do not desire to confine myself to the precise form of valve or bucket shown, as the same may be considerably varied without changing the result.

Neither do I claim the employment of two buckets moved simultaneously in different directions.

But I *claim* the combination of the chamber A, barrels *a* and a^1, valved buckets H and I, rock shaft C, lever E, and rods G and F, when the whole are arranged and constructed for joint operation, substantially in the manner and for the purpose specified.

No. 17,768.—HENRY PEASE, of Brookport, N. Y., assignor to ECKLER BUSWELL & Co., of the same place.—*Improvement in Pumps.*—Patent dated July 7, 1857.—Rotary motion being given the crank shaft K, a reciprocating motion is imparted to the piston *p* by means of crank O; and when the parts are in the position represented in the engraving, the induction valve 32 is closed, and eduction valve 34 is opened, and the water is forced through discharge pipe E; and as the piston is receding, it draws the water through the induction pipe D, the valve 8 being open, and valve 10 being closed.

Claim.—The guide rods *m m*, constructed and arranged as described, for the purpose of preventing the rotation of the piston, and of facilitating the attachment and detachment of the shaft to and from the crank O.

No. 17,820.—BIRDSILL HOLLY, of Seneca Falls, N. Y., assignor to SILSBY, MYNDERSE, and SHOEMAKER, of the same place.—*Improvement in Pumps.*—Patent dated July 14, 1857.—By adjusting the leather *e* so that the passage 4 is exposed, the waste water is allowed to escape from the cylinder A into the suction pipe F, and the pump cannot be frozen up during the winter. In summer, the leather is so adjusted as to cover the passage 4, so that the packing of the valve may not shrink.

Claim.—The leather *e* placed over the perforations *d* in the top of the base E and the chamber *h*, which is placed on the leather; said leather being provided with a flanch *f*, provided with holes 1 2, either of which is fitted on the pin 3, for the purpose of exposing or closing the passage 4, substantially as described, for the purpose specified.

No. 18,309.—J. D. WEST, of New York, N. Y.—*Improvement in Pumps.*—Patent dated September 29, 1857.—As the pistons of this pump are drawn up, the water rushes into the chamber *a* from the suction pipe e^1, through valve *f*, and, flowing over, runs under the valve seat of valve *f* at *x*, and then, passing up through valve f^1, it enters the inner cylinder a^2; thence it goes through the plunger box *p* as the plungers descend, and passes off at the spout *s*.

The inventor says: I do not claim air chambers with a pump, as they have before been used, but not in so compact or perfectly constructed a form as I have devised; therefore,

I *claim* the combination of the air chamber with two inner cylinders and duplicate foot valves, substantially in the manner and for the purpose set forth.

No. 18,559.—NOAH SUTTON, of New York, N. Y.—*Improvement in Pumps.*—Patent dated November 3, 1857.—This invention consists in giving a variable motion to the pump pistons, so that their downward movement will be quicker than their upward movement; the two pump cylinders being connected by a water passage, and the pistons, which work in opposite directions, provided with valves; the whole so arranged that the pump will throw a continuous stream of water, and one of equal volume, at all points of the strokes of the pistons.

The inventor says: I am aware that two pistons having a variable movement, and fitted within one cylinder, have been previously used; therefore, I do not claim giving a variable movement to the pistons, irrespective of the arrangement shown.

But I *claim* the peculiar means employed for operating the pistons, or giving them the variable movement, as described, viz: the pulleys Q Q, R R connected with the bars I of the pistons F G by means of the chains S T; the pulleys Q Q, R R being placed loosely on their shafts and connected alternately therewith, by means of the bars *f* connected with the spring *g*, the projections *h* on the wheels P, and the bevelled projections *i j* on the bars V; the whole being arranged as described.

No. 18,870.—HARMON A. SHELDON, of Middlebury, Vt.—*Improvement in Pumps.*—Patent dated December 15, 1857.—This invention

consists in the employment or use of a supplementary cylinder, or air chamber, connected with the pump cylinder, and so arranged that the liquid or fluid acted upon by the pump will not be brought into contact with its cylinder and piston. By this means the pump may be used for pumping or forcing up corrosive fluids, without being injured or acted upon in so being used.

The inventor says: I do not claim the employment or use of valves constructed of glass or other acid-resisting materials, for they have been previously used.

But I *claim* the employment or use of the supplementary cylinder or air chamber E communicating with the pump cylinder A by means of the pipe F, and having the induction and force pipes G I attached, which are provided respectively with the valves H J, as and for the purpose set forth.

No. 18,916.—Hosea Lindsey, of Ashville, N. C.—*Improvement in Pumps.*—Patent dated December 22, 1857.—A is the pump barrel placed horizontally at the bottom of the well, and made to revolve by means of the hollow water-conducting shaft B; C C are pistons made tubular, and open at their outer end, and furnished with a valve at their inner end; D D are screw-rods connecting the pistons together, the rods slide through *a a* of the barrel A; E is the stationary eccentric set horizontally below the barrel A; F is the pin of the same, it serves as an axis for the barrel to turn on; G is the turning ring or collar fitted loosely around the eccentric, and confined by means of the friction wheels *b b;* H is the strap connecting this ring to one of the pistons, as shown in the engravings.

The inventor says: I do not claim in this application the operating of the pistons of a pump arranged at the bottom of a well by means of a double inclined plane, as the same was shown in my patent of 1855.

But I *claim* the attaching of the axis F of the pump cylinder A eccentrically to a stationary circle plate E, in combination with the attaching of the pistons C C of said cylinder to said circle plate by means of a loose ring or collar G, connecting rod or strap H, and sliding frame D D, substantially as and for the purposes set forth.

No. 19,003.—Francis G. Wynkoop, of Corning, N. Y.—*Improvement in Pumps.*—Patent dated December 29, 1857.—This invention lies in the construction of the stuffing box. It consists in forming the packing *r* of India rubber, between a fixed base *f* and a loose stuffer *h*, with which the connexion on the piston P comes in contact at each stroke; the packing serving the double purpose of spring and packing.

Claim.—The combination of seat *f*, loose piece *h*, and rubber packing *r*, as set forth.

No. 17,653.—Charles N. Lewis, of Seneca Falls, N. Y., assignor to George C. King, of the same place.—*Improved Method of Attaching Air Chambers to Pumps.*—Patent dated June 23, 1857.—The air chamber C is permanently secured to the cylinder A by screwing the follower

H in the stuffing box G, and the chamber C may be turned so that the spout D may be brought into any desired position.

The inventor says: I do not claim arranging the air chamber C so that it may be turned on the cylinder, and the spout D brought in any desired position; for that has been previously done.

But I *claim* connecting the air chamber C with the cylinder A by means of the stuffing box G and follower H applied to the pump, and arranged relatively with the several parts, as shown and described, for the purpose set forth.

No. 17,154.—Levi Keiler, of Catawissa, Pa.—*Improvement in Atmospheric Pumps.*—Patent dated April 28, 1857.—Air is forced into chamber A through pipe H, forcing the water in cylinder A out through discharge pipe B, the valve *b* being closed during the operation. When the chamber A is emptied, valve *n* is closed, as represented in the engraving; and a fresh supply of water will then rush into chamber A through passage *a*, the air passing out through opening *r*.

The inventor says: I am aware that the elevation of water by condensation of air is not new, and do not claim anything more than the combination of the water receiver A and air induction pipe with the valve *n*, acting with respect to the openings *o* and *r*, as set forth, when said parts are arranged with respect to air condenser and discharge pipe substantially as described.

No. 16,603.—Edmund Morris, of Burlington, N. J.—*Improvement in Chain Pumps.*—Patent dated February 10, 1857.—The piston 4 travels in an India rubber tube B, the flanches D of which tube are fastened to the top and bottom of chamber A. This chamber being filled with water, the piston is always kept tightly packed.

Claim.—The application of an elastic flexible tube, arranged as set forth, in combination with the box or chamber in which it is enclosed, for the purpose of retaining water to assist in packing the pump, substantially as described.

No. 17,217.—James Harrison, Jr., of New York, N. Y.—*Improvement in Chain Pumps.*—Patent dated May 5, 1857.—The nature of this invention will be understood by reference to the claim and engraving.

The inventor says: I do not claim broadly the use of ropes composed of wire; but, to the best of my knowledge, I believe it is new to combine the buckets of chain pumps with a lifting cord composed of coiled wire, as shown.

I *claim* the use, in combination with the buckets B, of a lifting cord A composed of coiled wire, as described.

No. 16,875.—George W. Griswold, of Carbondale, Pa.—*Improvement in Rotary Pumps.*—Patent dated March 24, 1857.—The two eccentrics B B are placed diametrically opposite to each other on the shaft C. These two eccentrics, with their disks or plates *a c*, may all

be cast or wrought in one piece, and this one piece constitutes the whole interior of the drum or cylinder which it should snugly fill.

D D are two cut-offs, one for each eccentric. These cut-offs are operated by the eccentrics themselves, one eccentric keeping the cut-off of its fellow eccentric in action. The cut-offs operate in concert with each other and with their eccentrics through the series of rollers *e e e*.

The inventor says: I am aware two separate eccentrics with a fixed or stationary partition between them have been used in a pump cylinder this I do not claim.

But I *claim* the double eccentrics with their disks or plates formed in one piece, when operating in a drum or cylinder, substantially in the manner and for the purpose set forth.

No. 16,869.—Abel Barker, of Honesdale, Pa.—*Improvement in Rotary Pumps.*—Patent dated March 24, 1857.—This improved rotary pump has two sliding valves a a^1, which are combined with a rotating valve box placed within the centre of the pump casing. This valve box is composed of a cylindrical casing *l*, divided into two chambers by the disk partition A. The said valve box is confined between the two annular and angular shaped sections *b b* of the pump case; which sections, in connexion with the periphery of the valve box, form the water-way C of the pump, as shown in the engravings. The said casing sections are of such a shape that they can readily be combined with each other, and when suited to each other they hold the valve box within their inner angles *o o* in such a manner that the valve box can be freely rotated.

Claim.—Operating the two valves by means of independent attachments, which are actuated by cam grooves in the side casings of the pump, when the said valves are made to work in separate chambers in such a manner that if either valve should get out of order the said valve and its attachments, and also the side casing on that side of the pump, may be detached from the pump without interfering with the perfect action of the other valve.

No. 16,974.—Richard Gilbert, of Rochester, N. Y.—*Improvement in Rotary Pumps.*—Patent dated April 7, 1857.—Motion being imparted to shaft Y, the arm F on said shaft acts on the inner circumference of the eccentric ring D, and presses said ring against the inner circumference of the shell A, forcing the water from the induction pipe M into the induction pipe O. The ring D is prevented from turning by being connected to the shell by means of a link J.

The inventor says: I do not claim the annular piston of itself.

Neither do I claim a radial arm.

But I *claim* the vibrating link or arm J, in combination with the annular piston D, as described, and for the purpose specified.

No. 18,488 —Henry Pease, of Brockport, N. Y., assignor to Himself, John Eckler, Ebenezer B. Buswell, and Frederick Belden, of the same place.—*Improvement in Rotary Pumps.*—Patent dated October 20, 1857.—When motion is given to the pump, in the direction

of the arrows, the piston draws the water in at B, and drives it out at D. When the piston has moved round far enough to come in contact with the stop P, which drives the piston down into the chamber 40, or nearly so, when it also comes in contact with the abutment, which insures its going as far as necessary for the purpose of passing the abutment, it is then thrown out of the shell again, or nearly so, by means of the segment R, always keeping one piston in full operation.

The valves are constructed in such a manner as to compensate for their natural wear, which is done by hanging them eccentrically as follows: measuring on a line from 26 to pin *a*, then on a line to 27; the short side to work against the shell, and the long side to work in chamber 40. The hangers are made in such proper shape as to close the valves before the cylindrical portion reaches the abutment, thereby preventing injury or obstruction to the valves.

The inventor says: I *claim* the valve *n n*, constructed substantially as described—that is, hanging the valve eccentrically on the pin *a*, to compensate for the natural wear.

The hanger portion or heads of the valve, constructed as described, to close the valve before the cylindrical portion reaches the abutment.

The construction of the wearing surface of the valve, as described, for the purpose of obtaining a large wearing surface, and securing it from injury while passing the abutment.

No. 18,986.—Oliver Palmer, of Buffalo, N. Y.—*Improvement in Rotary Pumps.*—Patent dated December 29, 1857.—B B^2 are the pistons, made of cast iron or other metal, and revolving within the case A upon separate shafts. Each piston differs slightly from the other in the lines of its periphery; but the periphery of each is convex and concave, and so formed that the two will revolve on their respective shafts, and keep their peripheries in contact.

C is the metallic packing; this is made of brass or other soft metal; it is located in a suitable chamber, in the extremities of the pistons. It is allowed to play quite loosely in the chamber, so that the centrifugal force created by the revolution of the pistons will throw the packing outwardly against the inner periphery of the case, and thereby secure a water-tight contact between the pistons and the case in all parts of the revolution where the same is required.

Claim.—The pistons B B^2, constructed as described, in combination with the metallic packing C, operated as described, said pistons and packing revolving together, in the manner and for the purpose set forth.

No. 19,004.—William A. Young, of Charlotte, N. C.—*Improvement in Rotary Pumps.*—Patent dated December 29, 1857.—This improved pump is intended to be submerged, and is operated by means of a series of valves F placed within a circular rotating head D, which is placed eccentrically within a cylindrical case or box A, whereby the valves are made self-acting.

The inventor says: I am aware that sliding pistons have been fitted in rotating heads, placed eccentrically within cylindrical caves or boxes,

and arranged in various ways, said devices being employed both for rotating pumps and rotary engines. I therefore do not claim broadly the employment or use of sliding valves or buckets placed within a head fitted eccentrically in a case or box.

But I *claim* placing the sliding valves or buckets F within the rotating head D tangentially with its shaft E, or tangential with a circle concentric therewith and with the head; the head being placed eccentrically within the bar or case A, which is provided with the induction and eduction passages *a b*, as and for the purpose set forth.

I further claim the curved projections *h* at the outer ends of the valves or buckets F, as and for the purpose specified.

No. 18,660.—CHARLES N. LEWIS, of Seneca Falls, N. Y., assignor to Himself and G. C. KING, of Seneca Falls, N. Y.—*Improved Ventilating Attachment to be Applied to Pumps.*—Patent dated November 17, 1857.—The nature of this invention is shown by the engravings and claim.

The inventor says: I do not claim broadly the ventilation of wells by means of air tubes leading from the surface of the ground to the interior of the well, for I am aware that it is old. An example may be seen in the patent of D. Bartlett, 1856.

But to the best of my knowledge and belief, it is a new combination to unite a perforated ventilating chamber and base with the pump-barrel in such a manner that the ventilator shall constitute a part of the pump; whereby, when the pump is applied, the ventilator is also applied, and becomes operative from the moment the pump is set.

I *claim* the arrangement and combination of the perforated base D, cap G, and perforated tube *g*, with the pump-barrel A, as set forth, whereby the ventilator becomes attached to and forms a part of the pump, all as specified.

No. 17,009.—WILLIAM WRIGHT, of Hartford, CONN.—*Improved Method of Working Pumps.*—Patent dated April 7, 1857.—The nature of this invention will be understood by reference to the claim and engravings.

Claim.—I do not claim as the equivalent of my invention the use of two spiral cams, operating directly upon the heads of the piston rods, in the manner shown in the aforesaid patent of Root & Dickinson; but inasmuch as that arrangement on a large scale is mechanically inoperative, and therefore useless,

I do *claim* to have devised the method referred to as in use at the Hartford Water Works; that is to say, I claim as my invention the described arrangement for working a double bucket pump, consisting of a cam A placed centrally over said pump, and combined with the buckets thereof by bell-cranks B C, so situated that one arm of each of said cranks bears at the same time upon opposite or nearly opposite points of the edge of the cam, whereby the necessary strength and stability may be given to the several parts, while preserving the regular throw of the buckets, the whole being arranged and operating substantially in the manner set forth.

No. 17,188.—N. R. BATES, of New York, N. Y.—*Improvement in Stuffing-Boxes.*—Patent dated May 5, 1857.—The nature of this invention will be understood by reference to the claim and engravings.

The inventor says: I do not claim constructing a stuffing-box for the purpose of allowing a lateral motion of the piston, as that has been done before.

But I *claim* the combination and arrangement of the plate F with the wires H H surrounding it, and the screw rods I, I and nuts J J, as described, for the purpose of compressing evenly around the piston the packing as it wears.

No. 17,503.—JOSEPH HYDE and WILLIAM STEARNS, of Wilmington, Delaware.—*Improved Method of Guiding and Cushioning Puppet Valves.*—Patent dated June 9, 1857.—When the valve A is operated, it is guided in rising and falling by rod B, working in a cushion or chamber O by means of a head C, which prevents the mashing and bruising of the stems.

Claim.—The application to steam engine pump-valves of the V-brace, with the piston working into the chamber or cushion, in the precise manner set forth and described, to prevent mashing or bruising of the valves.

No. 17,401.—S. H. WHITAKER and EZRA COPE, of Cincinnati, O.—*Improved Thermo-pneumatic Safety-Valve.*—Patent dated May 26, 1857.—When the beeswax in the chamber A is melted by the heat of the steam, the diaphragm *a* is raised by the expansion thereof, closing the passage B and preventing the escape of steam to the radiator D; but when the radiator cools by the steam being shut off, or the fire going down, the beeswax cools and contracts, drawing down the diaphragm *a*, and opening the passage B for the admission of air to the radiator through opening *c*.

The inventors say: We do not claim generally the operation of an air valve for steam-heating apparatus by the expansion of fluid bodies by heat; as we are aware that the thermo-expansive properties of quicksilver, air, and other fluid bodies have been employed for this purpose with partial success.

Neither do we claim the use of beeswax or other substance of similar character for the purposes described.

But we *claim* the described self-acting air valve, consisting of a chamber, whose top is composed of a flexible diaphragm, or its equivalent, filled with beeswax or other fusible substance that solidifies at atmospheric temperatures, but is expansible by heat, and that will act upon the diaphragm to open and close the passage through the combined agencies of expansion and contraction by heat, gravitation, and cohesive attraction, as specified.

No. 17,624.—EDWARD HAMILTON, of Chicago, Ill.—*Improved Valvular Arrangement for Faucets, &c.*—Patent dated June 23, 1857.—To open this, cock valve *b* is turned, by means of handle *b*, until the orifice *f* is brought coincident with the channel in the chamber *a*, and the water then can pass through the water-way *g* of the faucet.

The inventor says: I do not claim broadly the employment of conical valves in water-cocks, nor broadly the arrangement of valves in such a manner as that the pressure of the fluid shall keep the valves tight in their seats. An example of both of these features may be seen in C. A. Fautz's faucet, 1853.

But I *claim* the employment of a hollow conical perforated valve *b*, in the manner substantially as described.

No. 18,842.—ISAAC C. FOSTER, of Union City, Tenn.—*Improvement in Machinery for Lifting Water.*—Patent dated December 15, 1857.—The inventor describes the action of his improved apparatus as follows: Suppose the windlass to be moving in the direction indicated by the arrow, the line *e* which is attached to the ring on the ascending end of the rope will, when the knot *i* or its equivalent draws upon the ring *k*, raise the pawl G and carry it over the highest point until it falls on the other side of the pivot, so as to be ready to hold the windlass when turned in the opposite direction for raising the other bucket. In the same manner the action of the opposite end of the rope C, operating on the line *f*, reverses the position of the catch; thus the pawl is shifted to opposite sides of the windlass automatically.

Claim.—The arrangement of the double pawl G, and of the lines *e* and *f*, the sliding rings *k k*, and knots *i i*, or their equivalents, in combination; so as to automatically shift said pawl alternately to opposite sides of the windlass, and thereby prevent each ascending bucket in turn from returning into the well, substantially as specified.

No. 17,654.—PETER H. NILES, of Boston, Mass.; assignor to Himself and ALFRED DOUGLASS, jr., of the same place.—*Improved Water Metre.*—Patent dated June 23, 1857.—The water, being admitted to the metre by the pipe H, fills the chambers G G^1; thence it flows through the opening *a* into the chamber E, the air escaping through the opening *n*. When the water reaches the top of the cylinder, the openings *n* are closed by their floating valves. The pressure now exerted upon the piston C forces it and piston C^1 in the direction of the arrow, until the adjusting screw *h* bears against the sleeve R, and carries with it the pistons C C^1, the pin *i* moving freely along the slot *g* in the standard T. As the sleeve R moves, it vibrates the shaft P, and the pin *e* traverses the slot *f*, thereby depressing shaft O and diaphragm N. The reciprocating motion of shaft O is made to act upon the registering mechanism by means of a rod *p*. The motion of the pistons C C^1 is reversed by the action of sliding valve K, which is operated by the action of the differential piston or diaphragm N, which is actuated by the difference of the pressure of the water in the chambers G^1 and M.

Claim.—The two pistons operating in a single cylinder, in the manner substantially as set forth, in combination with the differential piston N, as described.

Second. I *claim* the air chamber F between the pistons C C^1, operating in the manner substantially as set forth.

Third. I claim float valve *w*, in combination with the two-way cock

U, whereby, when the water is shut off, all the chambers of the metre are emptied, as set forth.

No. 17,593.—ARCHIBALD THOMSON, of Detroit, Mich.—*Improved Method of Elevating Water by Compressed Air.*—Patent dated June 16, 1857.—The reservoir or tank A is immersed in a stream or well from which the water is to be raised. When air is forced down into compartment *b*, by operating a pump at the upper end of pipe B, the water in *b* will be forced up through pipe C to the desired spot. As the level of the water descends, the buoy *j* descends, and opens the valves *e g*. As the pipe *d* is opened, there will be an equal pressure of air on the surface of the water in both compartments, and the water from *c* will pass through passage *f* into *b*, and when the necessary supply is in *b*, the buoy *j* will close valves *e g*, the water in *c* being reduced sufficiently to cause the buoy *q* to open the valves *l m*; the air in the upper part of *c* will now escape through pipe *n*, and the water will rush through the opening in the bottom of *c*, which compartment will in consequence be replenished; the buoy *q* closing the valves *l m* when the requisite quantity of water is within said compartment.

The inventor says: I do not claim the raising of water by compressing or forcing air into a chamber or reservoir irrespective of the means employed for attaining efficiently said result.

But I *claim* the reservoir or tank A formed or provided with two compartments *b c*, which are provided respectively with valves *e g l m*, operated as shown, the compartment *b* being provided with the air forcing pipe B and eduction pipe C, the two compartments by the action of the valves communicating intermittently by means of the pipe *d* and passage *f*, the whole being arranged substantially as described for the purpose set forth.

No. 18,293.—JAMES NAUGHTEN, of Cincinnati, O.—*Improved Apparatus for Separating Oily Matter from Water.*—Patent dated September 29, 1857.—The box can be set at any convenient place and connect with the sink or vessel in which the dishes, &c. are washed, and the water made to run from the sink into the chamber A through the pipe attached to the side, and near the upper part of the chamber A, as represented in figure 2; as the greasy water is admitted into chamber A, it fills and forces itself into chamber B until it rises up and flows over the division board, and from thence flows into chamber C, and is conducted through opening *h* in the bottom of this chamber. The arrows marked in the drawing show the flow of water through the different chambers.

The inventor *claims* the arrangement of the chambers *a*, B, and C, when the chambers *a* and B are connected with the opening *d*, as represented, and all used in the manner and for the purposes specified.

No. 17,338.—ANDREW NICOL, of Carbondale, Pa.—*Improved Valvular Arrangement in Apparatus for Raising Water.*—Patent dated May 19, 1857.—A vacuum being produced in the pipe D, and rotary motion being given to the shaft H, the two rods F G have an opposite re-

ciprocating motion given them by the reverse cranks *o*, so that when the valves *q* of the two chambers A B are open, the opposite ones are closed, and *vice versa*. When the valves of the chambers A^1 B^1 are closed, as shown in the engraving, a vacuum is produced in the chamber A^1, and the water passes up pipe E through valve *l* and fills chamber A^1. While this chamber is being filled, the valve *q* of the chamber A is open, and the water in said chamber, which was drawn into it previously to filling the chamber A^1, is forced up by the pressure of the atmosphere through valve *g* into tube *e*, and through valve *d* into chamber B^1. While the water is being forced from chamber A into chamber B^1, a vacuum is produced in chamber A^1, and said chamber is being filled with water, while the water in A is being forced from it. As the valves *q* of the chambers B B^1 open, the water is forced out through openings *x*, which can be closed by gates *y*.

Claim.—The rods F G provided with the valves *q q*, and operated as shown, in combination with the chambers or vessels A A^1 B B^1, suction pipe D, and branch pipe *j*, and the tube *c a b e f*, provided with the valves *e d g h*, the whole being arranged as described for the purpose specified.

No. 16,669.—Daniel K. Winder, of Cincinnati, Ohio.—*Improved Method of Raising Water.*—Patent dated February 17, 1857.—When a greater quantity of water is desired, the tube *l* and plunger *j* are depressed, compelling the water contained in the central space to enter the plunger, and the annular chamber *f*. The water contained in the plunger is driven up the tube by the reaction of the air; meanwhile, valve *i*, shutting up the water in the annular chamber, causes it to be retained there under pressure of the confined air for future use. If afterwards a small quantity of water is desired, the cock *r* is to be opened by lifting handle *t*, when water will pass up through tube *p* into *j*, and cause an equal volume of water to pass up through *l*.

Claim.—The arrangement and combination, substantially as described, of annular reservoir *f* with the plunger *j*, tube *l*, flexible pipe *p*, valves *h i k*, and cock *r*, for the purposes explained.

No. 16,686.—Thomas Hanson, of New York, N. Y.—*Improved Apparatus for Supplying the Upper Stories of Houses with Water.*—Patent dated February 24, 1857.—The object of this improvement is to pump water into a reservoir or reservoirs *v*, in the upper part of a building, for the supply of the upper stories, by drawing water for the supply of the lower stories; *s s* represents the water level of the city reservoir.

Claim.—The combination of a hydraulic engine with and interposed between the supply pipe from the street main, receiving water from a head, and the house pipe or pipes and cock or cocks for supplying water to the lower story or stories of a house by the force of the said head, and the pump operated by the said engine, and receiving water from the same head, and discharging it into a reservoir or reservoirs for the supply of the upper stories of the house, substantially as and for the purpose specified.

No. 16,881.—SAMUEL REYNOLDS, of Oswego, N. Y.—*Improved Water-Wheel.*—Patent dated March 24, 1857.—The nature of this improvement in water wheels consists in arranging a series of radial floats E E above a horizontal plane F, in combination with a series of floats or buckets H H arranged below said plane, made narrowest where they join the radial floats, and gradually increasing in width outwards and in depth downwards, with an inclination towards the centre, to their termination, so as to make an outlet or discharge deeper towards the centre than towards the periphery.

Claim.—The radial floats above the horizontal plane, in combination with the buckets or floats below said plane, constructed substantially as described, that is narrowest where they join the radial floats, gradually increasing in width outwardly and in depth downwards, with an inclination towards the centre, to their termination, making the outlet to discharge the water deeper towards the centre than towards the periphery.

No. 17,426.—REUBEN DANIELS, of Woodstock, Vt.—*Improved Water-Wheel.*—Patent dated June 2, 1857.—The water passes through the flume D and acts upon the inner sides of the buckets *b*, and passing between them escapes at the outer side of the wheel. The flanch *c* confines the water sufficiently so that it is all made to act against the buckets as it passes out of the flume.

The inventor says: I am aware that it is common in all wheels to bind or hold the ends of the buckets by means of narrow rims which cover the ends of the buckets; and therefore I do not claim such rims.

I also disclaim broadly confining the stream of water to its effective course. An example of this is seen in E. Parker's patent, dated July 24, 1847.

I also disclaim broadly the admitting of water within the wheel, and discharging from its periphery, as such wheels are in general use.

I also disclaim any special form of the buckets.

I also disclaim every feature of the described invention which is seen in any other water-wheel of this class.

But, to the best of my belief, no wheel has ever been made of the class now shown, in which a flanch *c* was employed in the manner and for the purpose described. The use of such a flanch causes the wheel to present new virtues of a great and important character.

I *claim* the use of a flanch *c*, or its equivalent, in the manner and for the purposes substantially as described.

No. 18,507.—WILLIAM HENLEY, of New Salem, N. C.—*Improved Water-Wheel.*—Patent dated October 27, 1857.—The claim and engravings explain the nature of this invention.

The inventor says: I am aware that the shafts of water wheels have been passed through cylinders, and that a top vent wheel has been devised; these I do not claim independent of each other, or of the manner in which I arrange them with the curb and water way.

But I *claim* so arranging a wheel on the top of a curb that has an open centre, and the water way of which diminishes from its bottom *towards the point* where it meets the buckets of the wheel, as that the

points of the buckets shall project into and be struck by the live water, and the whole wheel lifted up to counteract the weight of the dead or back water, as set forth.

No. 16,432.—E. G. Cushing, of Dryden, N. Y.—*Improved Centre-Vent Water-Wheel.*—Patent dated January 20, 1857.—D and C represent the buckets of this water-wheel. When the gate is shut so that no water can enter the spaces between the buckets, then the springs F tend to close said spaces, turning the buckets in the position of buckets C; when the water is let on to the wheel said spaces are enlarged, as represented in the position of buckets D. This arrangement permits the use of a variable quantity of water on the same wheel.

The inventor says: I do not claim any particular shaped bucket, as I am of the opinion that one stated curve is not adapted to all heads with equal results.

But I *claim* making a bucket with a back of such a curve that it forms a space of regular contraction from the outside to the inside of the wheel.

2d. Hanging the buckets, combined with a spring, in such a manner that the discharge orifice is regulated by the quantity of water let into the scroll and the amount of power required, and closing together when the gate is shut.

No. 17,119.—Thomas Stamp, of Wetumpka, Ala.—*Improved Current Water-Wheel.*—Patent dated April 21, 1857.—By turning pinion *h*, rack *e*, together with hub F of the water wheel *b*, and consequently the water-wheel itself, may be raised or lowered, and thus exposed to a greater or smaller quantity of water acting upon it.

Claim.—So constructing a current water-wheel that it may be raised and lowered, as set forth, in combination with the method described for regulating the force of current acting thereon, all arranged and combined as set forth.

No. 17,041.—J. R. Howell, of Alexandria, Va.—*Improved Method of Attaching Adjustable Buckets to the Shafts of Water-Wheels.*—Patent dated April 14, 1857.—The buckets A can be adjusted on the arms C by means of the bolts E passing through the slots D, and thus the diameter of the wheel can be enlarged or reduced.

Claim.—The method described of adjusting and securing the buckets A to the arms *c* of the water wheel, that is to say, the arrangement of the ribs B, mortises, or their equivalents, and bolts E, in combination with the flanged ends *a* of the arms *c* of the wheel, substantially as set forth.

No. 16,465.—Tenison Chesher, of Middleburg, Ohio.—*Improved Method of Inserting the Buckets in the Shafts of Direct Horizontal Water-Wheels.*—Patent dated January 27, 1857.—Mortises *e f* are made at right angles with each other through shaft A, through which two corresponding mortises in cylinder *a*, the buckets C slide with a reciprocating motion. This motion is effected by means of the curved piece D, when coming in contact with the end of the bucket.

Claim.—The sliding buckets C, when constructed and arranged as described, and combined with the mortises *e* and *f*, in the manner and for the purpose specified.

No. 17,726.—THOMAS CLARK, of Philadelphia, Pa.—*Improved Air Chamber to effect Uniformity of Flow of Water, &c., through Pipes.*—Patent dated July 7, 1857.—The nature of this invention will be understood by reference to the claim and engravings.

Claim.—I am aware that an elastic medium in connection with a perforated pipe or head has been used as a spring to ease the strain on the hose or pipe. This I do not claim.

But I claim the arranging of an elastic or extensible sack or bag J in the line of a pipe or water way, when said sack is surrounded with a casing and air chamber for the purpose of effecting a uniform flow of water through pipes.

No. 16,535.—DANIEL P. FARNHAM, of Milton, Wis.—*Improved Self-Operating Device for Tilting Buckets in Raising Water from Wells.*—Patent dated February 3, 1857.—The rod *e* on striking rod H will be released from the loop *g*, and the bucket will tilt as represented in dotted lines.

The inventor says: I do not claim attaching buckets to endless chains for raising water, for that is an old and well known device.

But I *claim* the fastening formed of the rods *e* attached to the cross-pieces *d* of the links C, and the loops *g* on the buckets F, in combination with the pendent or swinging rod H, placed within the framing or curb A^1, the above parts being arranged a sdescribed, and for the purpose set forth.

No. 16,975.—JAMES H. HANCHETT, of Beloit, Wis.—*Improved Current and Paddle Wheel.*—Patent dated April 7, 1857.—The paddle wheel, consisting of the sides B and B^1 and the floats C, is suspended by means of radius bars H, so that said wheel will be free to rise and fall, by oscillating on the axis of said radius bars, thus passing over any obstructions which may be under water. The wheel as it rises and falls, by oscillating on the axis of the radius bars, turns equally said radius bars and the floats C, by means of their crank connexions *b*, so that their parallelism to each other is maintained in all positions of the wheel.

Claim.—First. Suspending water and paddle wheels by means of radius bars, substantially as described.

Second. The method of maintaining the planes of the faces of the floats of wheels that oscillate, as described, in a determinate relation to the radius of oscillation of the wheel, as described.

No. 17,246.—L. M. WRIGHT, of Niagara Falls, N. Y.—*Improved Mode of Operating the Gate of Turbine Wheels.*—Patent dated May 5, 1857.—The circular gate A is attached to the sliding collar C, and thus, by operating lever L, the position of the gate A can be adjusted to any desired degree.

The inventor says: I do not claim the parts separately.

But I *claim* their arrangement in the manner described, and for the *purposes set forth.*

No. 17,168.—Rufus Nutting, of Randolph, Vt.—*Improved Wind-Mill.*—Patent dated April 28, 1857.—When it is desired to close the wings D^2 in part or entirely, the lever O is pressed down, bringing clasps G against the ratchets S upon the back of the wings, and, as soon as they are closed by coming against the wind, prevents them from reopening until lever O is raised. The parts E F G constitute the regulator, which governs the speed of the machine by preventing the wings from opening wider than is necessary to receive sufficient wind to propel it with the desired velocity, the amount of centrifugal force necessary to bring the regulator towards the back of the wings being graduated by the weight of F G, in connexion with the distance the upper axis of E is in the rear of its base.

Claim.—The construction of a horizontal wind power, with a regulator or clasp, operated by centrifugal force, which shall regulate the amount of surface of wing or sail opened to the wind, substantially as described.

Also, an arrangement by which the regulator or clasp may be conveniently set at any time by the operator in such position as to prevent the wings from opening too far, or at all, as is desired.

No. 18,368.—William Zimmerman, of Quincy, Ill.—*Improved Wind-Wheel.*—Patent dated October 6, 1857.—The nature of this invention consists in a wind wheel with radical sails arranged upon an upright shaft, and provided with a regulating apparatus to change the position of the sails and adapt them to the force of the wind, or the resistance of the machinery operated; and in devices to receive the wind and to guide it on to the wheel in the right direction to propel it with the greatest force; also, in a vacuum escape-cap above or around the wheel, for the wind to pass through out of the wheel; also, in arranging doors at the rear of the wheel-house, closed by a weight or spring, so as to yield and open for the surplus wind in the wheel-house to escape; and in some revolving wind receivers, or catchers, provided with flues to conduct the wind caught in the wheel-house. The drawings and claim will give a fuller idea of the improvements.

The inventor says: I *claim* a wind-wheel with radial sails arranged upon an upright shaft, when provided with the regulating apparatus first described, or its equivalent.

I claim the arrangements of the partitions and inclined guides which conduct the wind received at the front of the wheel-house on to the four quarters, or the several parts of the wind wheel, substantially as described.

I claim a vacuum escape-cap above or around a wind wheel, for the purpose set forth, substantially as described, whether made adjustable so as to enlarge the vacuum area or otherwise.

I claim the revolving wind receivers, or catchers, with their conducting flues, for the purpose of catching the wind and supplying it to the wheel, substantially as described.

No. 16,492.—John M. May, of Janesville, Wis.—*Improved Self-Regulating Wind-Mill.*—Patent dated January 27, 1857.—The nature

of this invention consists in making solid elbows L R, one arm L of each elbow having attached to it a sail M, and the other arm R having attached to it a ball S.

As the revolutions are increased, the weights S, acted upon by centrifugal force, turn the sails. The velocity of the wind-wheel being now somewhat checked, the weights S, aided by the weight of the shackle, the connecting rod, and the horizontal lever V below, and also aided by the upward inclination of the horizontal shaft, are caused to return to their former position, and in so doing gradually revolve each sail towards its original position.

The inventor says: I do not claim the separate devices for regulating the wind-wheels independent of their connexion with each other.

I *claim* the arrangement of the devices which are connected with each other, as described, for the purpose of regulating the velocity of the wind-wheel, and also for the purpose of controlling the wind-wheel independently of the self-regulating properties.

No. 16,943.—J. C. Wilson and T. G. Wilson, of Cedar Hill, Texas.—*Improved Method of Feathering the Sails or Vanes of Wind-Mills.*—Patent dated March 31, 1857.—The engraving represents one of the wings W of a wind wheel in a side view, with the driving-shaft A in section; the wheel is rotated as the wind acts upon the oblique sides of the wings W. When storms occur, the crank *g* is held by the miller, causing the rotation of the wheel to produce the outward movement of the screw *m*, which, acting on rods *c*, will draw the edges *n* of the wings in the direction of the outer extremity of the shaft A, and cause the wings to lie in planes passing through the axes of arms *a* and main shaft A; the wind will then be able to act on their edges only, doing no damage to the wheel.

Claim.—The combination of the traversing screw *m*, having stops *e* and *f*, as described, with the slide piece and rods leading to the wing; the construction and arrangement being substantially as and for the purposes described.

No. 16,346.—Henry S. Wentworth, of Napoleon, Mich.—*Improved Self-Regulating Wind-Director for Wind-Mills.*—Patent dated January 6, 1857.—The wind operates the upper portion only of the fans of the wind-wheel K, it being prevented from affecting the lower portion of the same by the semi-circular screen L, which partially encloses it, and is hung upon the same centre with the wheel. When the force of the wind is so great as to drive the wheel too rapidly, it operates the fan M which is connected with screen L, thus raising the latter and shutting the wind partially off from the upper portion of the wind-wheel.

Claim.—A semi-circular revolving balance screen, operated variably, as set forth, by the power of the wind upon the revolving extra fan M, for the purpose of admitting only the requisite current of air to the wheel, substantially as described, whether placed in a horizontal or vertical form.

No. 17,862.—ETHAN ALLEN, of Worcester, Mass.—*Improvement in Governor for Regulating the Work of Wind-Mills, &c.*—Patent dated July 28, 1857.—When the wind-mill is revolved with its average velocity, the balls of the regulator are in such a position as to bring the clutch N between the gears K and L, affecting neither; they will then turn with shaft J with the same velocity as the shaft D, thus leaving the pinion H and screw G still holding the crank pin E midway from its centre of motion to its length of slide, giving a medium length of stroke. When the force of the wind increases, the balls of the regulator are raised and throw the clutch N down, which, catching the gear L, drives the shaft J and turns the screw G, moving the pin E on its slide further from its centre of motion, thus increasing its length of stroke and work.

The inventor says: I am aware that the employment of a centrifugal governor, to regulate the stroke of a pump or the amount of work by the available power of a windmill, is not new. This, therefore, I do not claim.

But I *claim*, in combination with the adjustable or expanding crank, the projection U attached to the slide of the crank pin, and the sliding rod W upon which it acts for the purpose of engaging a grooved collar upon the spindle of the governor, whereby its adjusting power is confined within a certain proper range, substantially as set forth.

No. 17,384.—JAMES MITCHELL, of Woodsfield, O.—*Improved Wind-Wheel.*—Patent dated May 26, 1857.—A detailed description of this invention would take up too much space to be given here; the principal features thereof will be understood by reference to the claim and engravings.

The inventor says: I am aware that weights have been applied to the fans of said wheels, and connected to sliding heads, and so arranged as to render them self-regulating. I do not claim, therefore, a weight thus applied.

Neither do I claim the levers *f* applied to the fans as shown, nor the stopping cord *m;* for they or their equivalents have been previously used.

But I *claim*, first. Placing the arms L of the fans obliquely, so as to have a proper degree of inclination with the shaft E, for the purpose specified.

Second. Attaching the arms L to the levers K, and connecting said levers to the sliding collar N, operated as shown, for the purpose of adjusting the arms L more or less obliquely with the shaft E as desired.

No. 16,616.—EDWARD A. TUTTLE, of Brooklyn, N. Y.—*Improved Self-Adjusting Wind-Wheel.*—Patent dated February 10, 1857.—The revolutions of the wind-wheel impart to the sails a rotation about their axes *c c* in an opposite direction, at the rate of one rotation of the sails to two revolutions of the wind-wheel, by which means the sails are to be retained in the best possible position before the wind.

By means of vane *v*, the shifting of the wind causes the sails to

accelerate or retard their rotary motion, so as to maintain the same angle to the wind, however the latter may be changed.

In suspending the sails upon vibratory shafts $o\ o^1$, they are allowed to incline from the perpendicular in either direction, at the same time they are rotating upon their axes *c c*, and around with the wind-wheel, being weighted and balanced by bars *w*, (which latter can be adjusted by turning them more or less on their pivots *p p*,) so as to turn edgewise by a greater or less force of wind as desired.

The offsets $y\ y^2$ serve the double purpose of weighting the sails, and also of assisting them to perform the rotations around their axes, by offering to the wind a greater resisting surface upon the receding side of the sail, when they are anywise inclined from the perpendicular by the force of the wind.

The inventor says: I do not claim a horizontally revolving wind-wheel as such, or suspending them upon a second horizontal shaft simply.

I *claim* placing the sails D D, or a greater number, in a position before the wind, as shown, and then causing them to perform complete rotations upon their axes *c c*, in the time relatively with those of the wind-wheel and in the direction as specified, by connecting them with the crown-wheel E, in any manner producing the same result, for the purpose set forth.

I also claim the particular mechanism shown and described, viz: the crown-wheel E and vane *v*, connected with the sails D D by means of the pinion wheels *h h* and *l l*, and wheels F F, arranged in the manner substantially as shown for the purpose set forth.

I also claim combining with the horizontal rotary motion of the sails upon their axes *c c* the perpendicular adjustable vibratory motion described; by which they are rendered self-regulating in a most simple manner, although presenting reverse sides to the wind at each succeeding revolution of the wind-wheel.

I also claim the method of assisting the sails to perform their rotations upon their axes *c c*, by means of the reverse projecting rims $y\ y^2$ upon the bottom edges, and operating in the manner described.

No. 16,818.—ABNER P. WILSON, of Solon, Ill.—*Improved Self-Regulating Wind-Wheel.*—Patent dated March 10, 1857.—When the force of the wind increases too much, it will overcome the gravity of the weights G, and raise the outer ends of the parts F of the sails, and thereby cause an opening of sufficient capacity to regulate the velocity of the sails.

The inventor says: I do not claim, broadly, the application of weights to adjustable sails, whereby the sails, by the action of the wind, are adjusted so as to present a greater or less surface to it, according to its velocity; for weights have been applied and arranged in various ways for effecting the purpose.

But I *claim* constructing the sails of two parts E F, attached or fitted to inclined frames, which are secured to the arms C D, the upper parts F of the sails being hinged to their frames *a*, and having weights G and cords *d* attached, substantially as shown and described for the purpose set forth.

No. 16,378.—JOSEPH DUNKLEY, of Carrollton, Mo.—*Improved Automatic Regulator for Wind-Wheels.*—Patent dated January 13, 1857.—At the starting of the wheel, the weight *m* will draw the slide *l* to the outer portion of wing *g*; the weight *c*, in connexion with the resistance of the air to the slide *l*, overcoming the weight *n*, the slats *s* being held close against each other by said weight *c*, and thus receiving the full force of the current of air. As the velocity of the wheel increases, weight *m* gradually rises, being held by cord *q*; this rise of weight *m* causes weight *n* to draw the slide *l* inward; and as the slide *l* moves inward, the arm of lever of the resistance of the wing *g* to the air behind diminishes, causing the weight *n* to draw the wing and lift the slats *s* of the arm A, with which it is connected.

Claim.—The employment of the slide wing *g*, arranged and operating substantially as described for the purposes specified.

No. 16,723.—JOSEPH DE SENDZIMIR, of South Oyster Bay, N. Y.—*Improved Method of Suspending Wind-Wheels in Self-Revolving Adjusting Frames.*—Patent dated March 3, 1857.—The wind-wheel A is placed within the frame *b c*, which latter is pivoted at top and bottom, at *l* and *k*, for the purpose of allowing the wheel to be turned to the wind with perfect freedom.

The inventor says: I do not claim the regulation of the sails by weights, levers, and cranks; nor the use of brakes for stopping the wind-wheel; nor communicating power by pulleys, bands, cones, &c.; neither do I claim any part or feature of the machine described which is seen in any other wind-mill.

But, to the best of my knowledge, it is new to suspend the wind-wheel within a revolving frame, in the manner and for the purposes already described.

I *claim* suspending the wind-wheel A within a revolving frame *b c*, in the manner and for the purposes substantially as set forth.

No. 16,893.—FREDERICK W. WITTING, of Twelve Mile Colett's Gin, Texas.—*Improved Mode of Regulating the Velocity and Furling the Sails of Wind Wheels.*—Patent dated March 24, 1857.—The claim and engraving explain the nature of this invention.

The inventor says: I *claim* connecting the spindles E to the sliding rod F by means of the part pinions or segments *c* and rack *d*, arranged as described. But I disclaim the spindles so arranged as to turn in their hub, and also the weight when not used in connexion with the segment and rack.

I further claim furling and unfurling the sails H by means of the drums *j k* attached to the rod F, and the cords *p t* attached to the drums and sails, as shown and described.

No. 18,440.—JESSE M. CLOCK, of Atlanticville, N. Y.—*Improved Vane for Wind-Wheels.*—Patent dated October 20, 1857.—This invention consists in an improved construction of the vane, whereby the wheel is quickly adjusted to face the wind during sudden changes of the same, and the tendency of the wheel to be deflected or turned from its proper position relatively with the direction of the wind, in consequence of the resistance offered to the revolutions of the wheel, by the

application of machinery thereto, effectually prevented. The engraving and claim further describe this improvement.

Claim.—I do not claim, broadly, the application of a weight to the wings or sails of a wind-wheel, for the purpose of rendering them self-regulating; for this has been done in various ways.

Neither do I claim the sails arranged and applied to the wheels, as shown.

But I *claim* the vane I, formed of two parts a^1 b^1, the part b^1 having an oblique position relatively with the part a^1, and either hinged to said part a^1 or attached permanently to it, for the purpose specified.

No. 16,895.—A. W. Wood, of Milwaukie, Wis.—*Improved Method of Regulating Velocity of Wind-Wheels.*—Patent dated March 24, 1857.—The claim and engraving show the nature of this invention.

Claim.—Enclosing the wind-wheel A within a cylindrical case B, formed of two rows or series of vertical slats C D, one row or series of which is placed in a reverse position to the other; and encompassing said case with a gate G, which may be raised or lowered on said case in any proper manner; the above parts being constructed and arranged substantially as shown, and for the purpose of regulating the speed of the wind-wheel, as set forth.

No. 18,210.—Francis Peabody, of Salem, Mass.—*Improved Method of Regulating the Velocity of Wind-Wheels.*—Patent dated September 15, 1857.—The position of the sections E^1 and E^2 of the disk E may be adjusted behind the vertical wind-wheel B by pulling ropes G; and thus a greater or less way may be opened for the passage of the wind behind the wheel, thus affording the means of regulating the speed of the wheel.

Claim.—As an improvement in regulating the action of wind-wheels, the sectional disk, operating in the manner substantially as set forth.

XII.—LEVER, SCREW, &c.

No. 16,390.—H. Maranville, of Clinton, Ohio.—*Improvement in Balance for Detecting Counterfeit Coin.*—Patent dated January 13, 1857.—This implement is used as follows: In weighing, for instance, a silver dime, the coin is placed upon disk A, the edge of the dime being placed against the ledges *c*; the slide C is then adjusted so that the line marked 10, in the part marked "cts." on the slide, will be even with the outer edge of the plate B. If the coin be genuine, its edge will be precisely over the line marked 10 in the disk, and disk A and slide C will be evenly balanced. The thickness of the coin is indicated by figures on the ledges *c*, the ledges being of taper or inclined form.

Claim.—The graduated disk A and slide C, connected as shown, and hung in the ears or lugs *b*, the disk having ledges or guides *c c* attached to its face, and the whole arranged as shown and described for the purpose set forth.

No. 17,252.—Z. W. AVERY and OTIS AVERY, of Bethany, Pa.—*Improvement in Self-Indicating Balance.*—Patent dated May 12, 1857.—When the scale-dish *h* is pressed downward by a weight therein, the scale-beam *b* is raised, causing the arm *c* to turn on its shaft *f*, and the poise *a* to roll out and balance whatever is placed in the dish *h*, the index *e* pointing out the amount of weight on the graduated scale-beam.

Claim.—The combination of the rolling poise *a* with the smooth beam *b* and the armature *c*, operating and arranged substantially in the manner and for the purpose set forth.

No. 18,973.—FERDINAND J. HERPERS, of Newark, N. J.—*Improvement in Balances for Detecting Counterfeit Money.*—Patent dated December 29, 1857.—A is the base of the implement, and B B are two uprights attached to the base. C C represent two vertical rods, which are placed at the inner sides of the uprights, one to each upright. The lower ends of these rods are connected to the ends of a horizontal rod D, which is attached to the inner end of a lever E, said lever being pivoted at *a* to the base A, and having a spring F underneath it, the spring keeping the outer end of the lever elevated, and consequently the inner end depressed.

To the bar G the scale-beam J is attached; one end on part *f* of this scale-beam is graduated, or has small holes *g* made in it to receive the point of a weight K, said holes being made in the beam at proper points, and numbered corresponding to the different denominations of United States coin. The opposite end of the scale-beam is formed of a plate *h*, having slots *i* made in it, said slots corresponding in length and width to the several United States gold coins. To the under side of the plate *h*, a vertical plate *j* is attached, said plate being slotted vertically, the vertical slots corresponding in width to the slots *i*, and being in line with them.

The inventor says: I do not claim to be the inventor of swinging index bars for weighing machines, and therefore I disclaim the same as used in my apparatus. Their employment is not essential, as my instrument can be made and used either with or without the same, as may be desired.

I *claim* as a new article of manufacture a coin balance, when constructed as described.

No. 17,485.—ASA O. BROAD, of Louisville, Ky.—*Improvement in Metallic Band Fastening for Bales, &c.*—Patent dated June 9, 1857.—The nature of this invention will be understood by reference to the claim and engravings.

Claim.—A metallic hoop or band, whose ends are united by the bows or curves *a a*, slide B, and pin C, as set forth.

No. 18,514.—WILLIAM MINER, of Houma, La.—*Improvement in Fastening for Metallic Bands for Cotton Bales, &c.*—Patent dated October 27, 1857.—The claim and engravings explain the nature of this invention.

The inventor says: I claim securing the ends of metal bale hoops together by forming loops or eyes in the ends of said hoops, by cutting parallel slits *b* through them, and bending outward the intervening portions b^1, the loops overlapping each other as the ends of the hoops are overlapped, and a transverse wedge or key *c* passed through the loops, substantially as shown and described.

No. 18,299.—CHARLES J. PROVOST, of Lardis, Ala.—*Improvement in Fastening for Metallic Bands of Cotton Bales, &c.*—Patent dated September 29, 1857.—The nature of this invention relates more especially to the slide which covers the lock of the hoop, said slide being formed with a slot at each end, so that with a tool of the proper kind the ends of said slide may be struck down against the bow or bend of the locks, and thus prevent them from slipping apart; whilst neither said slide nor the ends of the hoop have any corners or projections on them that catch into the bolts or bagging when rolled over each other, nor can there be unloosing of the band or hoop by transportation or handling.

A represents the hoop or band, made of ordinary hoop iron, and having a half-lock A A formed on each of its ends.

B is a slide having slots or scores C cut in its ends.

When the hoop is passed around the bale, and its two bent ends hooked into each other to form the lock, the slide B, which had been previously slipped on to the hoop, is then drawn over the lock A A, and a tool applied to each of its ends, which drives down a portion of said slide against the bow or ends of the locks. Thus the lock cannot separate, nor can the slide move.

The inventor says: I do not claim a slide in combination with the locks on the end of the hoop.

But I *claim* so forming the slide as that its ends may be struck down behind the bow or bend of the locks, and thus not only prevent the lock from separating, but also hold the slide to the lock, substantially as herein set forth.

No. 17,034.—GEORGE FOCHT, of Reading, Pa.—*Improved Hoisting Bucket for Coal, &c.*—Patent dated April 14, 1857.—In discharging coal or grain from a vessel, the bucket A is lowered, and resting on the rolls *a*, as shown in fig. 3, it is forced into the heap of material; when the bucket is sufficiently charged, it is elevated by running up cord d^1, and its forward end will be brought into the position shown at fig. 1. By pulling cord *e*, the notch in the end of bar E is disengaged from the roll *b*, and the bucket drops into the position of fig. 2, and discharges its contents.

Claim.—First. The knife-edged bar E, arranged with a link C and and hook D, whereby the handle is clasped with the front edge of the bucket, as before described, or any arrangement substantially the same.

Second. Pivoting the handle to the sides of the bucket near the

bottom, as herein described, and clasping said handle to the front of bucket; whereby said bucket is completely inverted, when said clasp is unlocked from said bucket, and whereby the tendency of any weight in the bucket is to keep said handle clasped with said bucket, as set forth.

No. 16,501.—ISAAC VAN HAGEN, of New York, N. Y.—*Improvement in Oil Cans.*—Patent dated January 27, 1857.—When the can is turned so as to discharge the oil through its spout, the flow can be instantly checked by bearing upon the thumb piece *e*, which first stops the flow of air into the can, and then closes the valve C; when the can is turned up and the thumb removed, the valve falls, and the oil in the tube runs back into the can.

Claim.—The double tube B *b*, the loose valve C, and ventilator thumb piece *e*, constructed, arranged, and combined in the manner and for the purposes set forth.

No. 17,124.—HIRAM WELLS, of Florence, Mass.—*Improvement in Oil Cans.*—Patent dated April 21, 1857.—The oil which descends on the outside of the spout D will run through holes F and G back into the can B; and when the can is turned down to deliver the oil, the passage G is closed by ball L pressing down plate I and rod H.

Claim.—The conical cup and ball so arranged as to close the valve, substantially as described, when the can is turned down to deliver the oil contained in it.

No. 17,810.—GEORGE W. SIMMONS and GEORGE H. SIMMONS, of Bennington, Vt.—*Improvement in Oil Cans.*—Patent dated July 14, 1857.—As this can is inverted the oil will pass out through discharge pipe P, while the air enters the oil can through tube A.

The inventors say: We do not claim the interior tubes of the can. Nor do we claim, generally, the fastening of the air vents of an oil can to the stopper.

But we *claim* fastening the air vessel or tube T to the oil tube A, and the oil tube to the stopper S, so that the whole may be removed together for the purpose of cleansing or repairs, by which means we produce a better article of manufacture than when said tubes are fastened to the can and are not removable; the whole being made as set forth.

No. 18,949.—JOSEPH FRANCIS BÉRENDORF, of Paris, France.—*Improvement in Oil Cans.*—Patent dated December 29, 1857.—A is the can or case, B a hollow cylinder fixed on it at the upper part by means of a flange *a*, on which the cover C of the can rests. At the centre of this cover a hole is made of sufficient diameter to admit the rod E of a piston F to pass through, which piston is made of leather or hard India rubber, or of any other convenient material. The oil is admitted into the can through the opening D into the space existing between the external case A and the cylinder B. The oil is made to ascend into this cylinder through the annular space *g* between the bottom of the can and the edge of the cylinder B by the suction of the piston, which had been brought to its lowest position, and is made to ascend back.

Claim.—The construction of oil cans provided with an internal cylinder and piston, and the spring, in the manner and for the objects substantially as described.

No. 18,353.—PIERCE PORTER, of Hooksett, N. H.—*Improvement in Extension Elevators.*—Patent dated October 6, 1857.—The object of this invention is an expeditious means of elevating persons or weights to considerable heights, as, for instance, to assist firemen in the discharge of their duties, to serve as a fire escape, or to raise workmen when they are employed on the ceilings of lofty buildings, or for other kindred purposes. Any necessary power may be applied to windlass E, and the axis B^2 may be raised by any other equivalent mechanical means. The drawing and claim, to a great extent, describe this invention.

The inventor says: I do not claim any of the above described devices separately.

But I *claim* the employment of a truss frame, extending in a vertical direction, composed of the strips A A, &c, the cross ties R R, &c., and the axes B B^1 B^2 and B^3, the axis B^3 being confined in the vertical posts H and H^1, and the axis B^2 free to move vertically in the slots L and L^1, in combination with the pulley F and the windlass E, or their mechanical equivalents; the whole constructed and operating substantially in the manner and for the purpose set forth and described.

No. 17,289.—GEORGE MANN, jr., of Ottawa, Ill.—*Improvement in Clearing-Guard of Grain Elevators.*—Patent dated May 12, 1857.—The sliding grate D is placed over the feed opening *a* of the bin A, and in front of the usual slide C, the bars of the grate being bent at their lower ends, so as to form a sort of scoop to retain the foreign substances which are mixed with the grain; when the scoop is full, the foreign substances are elevated to the upper part of the bin A, by

raising grate D, and removed therefrom; the slide C being closed over the feed opening *a*, when the screen is raised.

Claim.—The sliding grate or screen D having its lower part curved or bent, as shown, and used in connexion with the slide C, substantially as described, for the purpose set forth.

No. 18,575.—JOHN CRAWSHAW, of Rochester, N. Y.—*Improvement in Hoisting Apparatus for Bricks, &c.*—Patent dated November 10, 1857.—The claim and engravings show the nature of this invention.

The inventor says: I *claim* elevating articles within a vertical trunk, by means of the mechanism shown, or any equivalent device, so that the articles will be raised with a continuous motion within said trunk.

I further claim the reciprocating plunger C, clamps I I, and arm *n*, operated by the cams E G J, or their equivalents, and used in connexion with the dogs M, the whole being arranged to operate conjointly as and for the purpose set forth.

No. 18,540.—GEORGE FOCHT, of Reading, Pa.—*Improvement in Hoisting Buckets.*—Patent dated November 3, 1857.—The bucket A is made of sheet iron, or any other suitable material of the form shown in the engraving. The handle B is hinged by the pivots *a* to either side of the bucket, near its centre, and at the top is furnished with an eye or other suitable contrivance to hoist it by. The catch lever *g* is at one end, and jointed to the handle, just behind the suspension point, and is curved so as to fit around the back of the bucket, the disengaged end being formed into a hook, which, when the handle is thrown forward until it strikes the stops *c*, just reaches and falls into the lip and roller *b*; in which position shown in the engraving, when the bucket is suspended by the handle, any weight has a tendency to hold it more securely.

Claim.—Catch lever *g*, in combination with the lip or roller *b* and the staple *d*, the whole being arranged as and for the purposes set forth.

No. 17,536.—C. P. S. WARDWELL, of Lake Village, N. H.—*Improvement in Cheese Hoops.*—Patent dated June 9, 1857.—The operation of this hoop is as follows: The hasp D is closed by means of button *e*, and the cheese curd is put into the hoops A, in the usual manner for pressing, and submitted to the pressing process. When it is desired to remove the cheese from the hoop, the hasp P is raised by means of knob L, which will force the hoop open sufficiently far to allow of its easy removal.

Claim.—The combination of the hasps D having a bridge or bar K at the outer end of its slot, arranged as described, with the oblong button *e*, the two operating together, substantially in the manner and for the purpose specified.

No. 18,779.—JAMES R. SPEER, of Pittsburg, Pa.—*Improvement in Clasps for Metallic Hoops.*—Patent dated December 1, 1857.—The claim and engravings explain the nature of this invention.

Claim.—The use of a hollow clasp or fastening for metallic bands,

of the shape shown in the drawings, through which the ends of the hoop are passed in opposite directions, and the projecting extremities bent over the clasp, and inserted into an aperture in the middle of the clasp, in the manner before described.

No. 17,024.—JOHN S. CHESNUT, of Philadelphia, Pa.—*Improvement in Lifting Jack.*—Patent dated April 14, 1857.—The lever C is turned by hand, and the lifting end *w* serves to raise the weight, by pressing down the thumb lever E; the longer arm of said lever will lift the bracket D, and handle C can be raised; and on releasing thumb lever E, the bracket D will retain lever C in any desired position.

Claim.—In combination with the rack lever C and the bracket D, the thumb lever E, so that the user may, with one and the same hand work the jack, and throw the bracket in and out of gear with the rack at pleasure, the whole being combined in the manner and for the purpose set forth.

No. 17,027.—ROBERT W. DAVIS and DANIEL DAVIS, of Yellow Springs, Ohio.—*Improvement in Lifting Jack.*—Patent dated April 14, 1857.—When lever C is raised, the gripe D connected with lever C, by rods G, which are pivoted to said lever at *l*, slides down on the rack bar, and its pawl *d* takes into a lower notch of the rack *g*; then, by pressing down lever C to a horizontal position, the gripe D is raised and lifts the rack bar B with it, the stationary pawl F retaining the rack bar at the height to which it is moved, while lever C is raised again for a new hold.

The inventors say: We do not claim the ratch-bar gripe, pawls, or connecting rods, described.

But we *claim* the application of the power centrally, beneath the self-clutching gripe or collar, whereby its action is directed in the line of the axis of the ratch bar, for the purpose specified.

Also, the free upright connecting rods G G, upon which the reciprocating gripe rests, arranged and operating in combination with said gripe and the lever substantially as specified.

No. 17,344.—WILLIAM THOMAS, of Hingham, Mass.—*Improvement in Lifting Jack.*—Patent dated May 19, 1857.—The standard A is placed underneath the article to be raised, and bar D is raised by moving pawl E outward so that it will be free from the teeth *e* of the bar D, the upper end of bar D being placed against the article to be raised. By depressing lever J, the chain *l* forces up the bars C D, they being retained by pawl F, which catches underneath the teeth *h*, by weight F depressing arm F^1.

Claim.—The retaining pawl F, provided with the weighted arm F^1, attached to the standard A, arranged relatively with the pawl E and catch G substantially as shown, for the purpose set forth.

No. 17,757.—HEBER G. SEEKINS and CHARLES H. GOSS, of Elyria, Ohio.—*Improvement in Lifting Jack.*—Patent dated July 7, 1857.—This jack, owing to the peculiar combination of the concave and convex

surfaces of the wedge B, and the convex surface of the upright C, will sustain a weight at any angle, equally well.

The inventors say: We do not claim the application of a wedge for the purpose of supporting the lever.

But we *claim* the concave and convex surfaces of the wedge, in combination with the concave surface of the upright, for the purpose of equalizing the direction of the pressure, as described.

No. 18,592.—LUCIUS J. KNOWLES, of Warren, Mass.—*Improvement in Lifting Jack.*—Patent dated November 10, 1857.—This improvement consists in the arrangement and combination of a loose collar C, having a series of teeth *b* formed on its inner face, and arranged in a circle at regular distances apart, and mounted on the neck of the lifting screw, with a disk or screw head D properly secured to the outer end of the screw shank, carrying a slide or drop crutch *d*, by means of which and the lever motion is communicated to the screw without change of position to the operator.

Claim.—The loose collar C, having a series of teeth arranged upon its inner face, in combination with a screw head D, carrying a drop clutch, when arranged and operating in the manner and for the purposes as described.

No. 18,955.—JOHN CALLAGHAN, of Stroud Glades, Va.—*Improvement in Lifting Jacks.*—Patent dated December 29, 1857.—The nature of this invention consists in constructing a lifting apparatus wherein is employed a lever *g*, alternating or changing its fulcrum; said lever also ascending in its course of action. The lever is detached, and merely rests on its fulcra. Two moveable fulcrums d^1, in the form of two bolts or pins, are employed; these are inserted in suitable holes *c*, arranged equi-distant from each other, but not opposite horizontally, yet are so arranged that if lines or dots be drawn from one hole to another, across an angle of 30 degrees, said lines or dots will indicate a right angle triangular position, as shown in the engraving, below the bolts or pins.

Claim.—The construction of a lifting jack, provided with series of perforations *c c c c*, and movable alternating fulcrums *d d e e*, the double notched lever *g g g*, fig. 2, combined with the chain J J J K, and stay-hole L L L, substantially as shown, and in the manner described.

No. 18,760.—DAVID L. MILLER, of Madison, N. J.—*Improvement in Lifting Jacks.*—Patent dated December 1, 1857.—Fig. 1 is an exterior view of the jack, partly raised, as shown from H to C. Fig. 2 is a vertical section of the same, showing the operation of the screw A and gearing E and F during the process of raising a heavy body, either upon the foot C, or upon the head of the outer cylinder B, which moves up and down with the screw A, when revolved by means of the bevel gearing E and F, operated by the crank I. The gear F is attached to the screw, and forms a part of the same; and the male gear E, which is attached to the crank, and connects with the corresponding gear F, through the outer or movable cylinder B at G, which

moves up or down with the screw, thus keeping the bevel gearing in gear and at a fixed point upon the lifting screw, near the top B^1 of cylinder B, which has a recess to receive and support the top of the screw, thus preventing any lateral movement when the screw is at its highest points; the base being supported by the stationary nut K, in the inner cylinder or standard D that is attached to the base H.

The inventor says: I do not claim to be the inventor of the individual or separate parts of the described screw jack.

But I *claim* the adjustable cylinder B, shoe C, inner cylinder or adjustable standard D, in combination with the main or lifting screw A and gearing E and F, arranged and operated as described and shown in the drawings.

No. 18,364.—ALBERT A. VEDDER, of Lysander, N. Y.—*Improvement in Lubricating Carriage Axles.*—Patent dated October 6, 1857.—In describing the construction and operation of this improvement, the inventor says: I construct my axle in any of the known forms, and construct a reservoir at a convenient point, as at B, in the accompanying drawing, in which I place a screw A, leaving a space for the grease or oil. C is a tube or channel leading from the top of the space B to the aperture at D. From D to E there is a groove which tapers, and runs out at E to distribute the grease or oil evenly over the whole surface as the wheel turns.

The inventor *claims* the manner of lubricating axles by means of a reservoir, screw, and suitable conduit, as described, or any other manner substantially the same, and which will produce the intended effect.

No. 18,863.—ENOCH N. ROLAND, of Baltimore, Md.—*Improvement in Lubricating Oil Cups.*—Patent dated December 15, 1857.—In this improvement, the valve *b*, at its lowest extremity, is of such a shape that it fits accurately to the shoulder *i*, when it is turned down to its lowest position; and the face of the valve *d* is of such a shape that it perfectly closes the aperture of the neck *g*, which descends from the lower section B of the oil cup. The valve *b* is operated by means of the crank *j*, and the valve *d* by means of the crank *k*.

Claim.—The peculiar combination of the screw valves *b d* with each other, and with the funnel neck and other portions of said oil cup, substantially as set forth.

No. 16,871.—JACOB D. CUSTER, of Norristown, Pa.—*Improved Method of Lubricating under Pressure.*—Patent dated March 24, 1857.—The nature of this invention consists in forming a chambered oil cup for oiling steam chests, cylinders, hammers, &c., by using a globe or oil chamber, and an upper and lower centre stop, or valve operated by a vertical revolving cup, or a vertical cylindrical stem, a vertical stuffing box, vertical screws, and two horizontal handles.

Claim.—The vertical revolving cap attached to the vertical revolving cylindrical stem C C C, the grinding or solid center valve E at the bottom; the screw G and its grinding or solid centre valve F, the handles I and H, and the stuffing box B, all so combined as to form a substantial vertical centre stop, revolving cup, steam chest, and

steam cylinder; oil cup for steam engines, steam hammers, &c., using for that purpose brass, or any other metal that may be deemed best, substantially as described.

No. 16,553.—NORMAN W. POMEROY, of Meriden, Conn.—*Improved Lubricator.*—Patent dated February 3, 1857.—The valve rod *g* rests on the inside of the elastic disk C, which serves as the bottom of the oil vessel A; so that by pressing the disk inward it will move the valve rod, and open the valve *c*, and allow the oil to escape. The spring *f* will close the valve, when the pressure is removed.

Claim.—The method of working the valve *c*, by means of the spiral spring *f* and elastic disk or bottom C, when the whole is constructed, arranged, and made to operate substantially as described.

No. 17,118.—HIRAM STRAIT, of Covington, Ky.—*Improved Lubricator.*—Patent dated April 21, 1857.—The oil is poured on the lid L, and then passes down into sponge S, and then its flow on to the parts to be lubricated is regulated by the pressure given by the thumb screw T.

Claim.—The oil cup X, with its sliding bottom B, thumb screw T, guides G G, in combination with porous oil bags or pieces of sponge S, or any other porous and elastic material saturated with oil, and the spring Y, substantially as specified.

No. 17,822.—HENRY J. HAWKINS, of Mobile, Ala.—*Improved Lubricator.*—Patent dated July 14, 1857.—By pressing down the rod B to the position represented in the engraving, the valve D closes the passage leading from the oil cup A; while the valve C opens the lower passage, and the oil contained in the lower part of cup A escapes, in the manner represented in the engraving.

The inventor says: I do not claim the origination of lubricating steam engines by a stationary or movable machine, as some such method has long been in use. I *claim* the general arrangement of this lubricator, with its mode and manner of admitting the lubricating substances, so as to strike at once on all parts of the interior surface of the cylinder.

No. 17,957.—WILLIAM BAKER, of Utica, N. Y.—*Improvement in Automatic Lubricator for Railroad Car Axles.*—Patent dated August 11, 1857.—When the car or locomotive is in motion, the concussions of the wheels against the rails cause the piston C to swing slightly on its supporting spring *e*, and at each vibration it forces a small supply of oil from the reservoir *a*, through passage *p*, up to the journal J.

The inventor says: I am aware that machines have been constructed to lubricate car journals, by conveying the oil, or other lubricating material, from a reservoir below to the journal, by means of capillary attraction, by the use of cotton wicking, cotton cloth, cotton waste, coarse wool, or other porous or spongy substance, applied between the oil and the journal, and also by the action of various mechanical agencies and constructions placed under and around the journal, and

depending for their action upon motion to be communicated to them by the revolving action of the journal.

I do not, therefore, claim any such agency, and whatever contrivances may have been constructed by the use of bobs or pendulums to convey the oil to the journal, and moved in any manner by the motion of the cars, I disclaim.

But I *claim* the mode described of conveying and applying the lubricating material to the journals of railroad cars and locomotives, by ejecting the same from the reservoir to the journal by the use of the piston, as described, which is moved directly by the jar or concussion when the car or locomotive is in motion, without the aid of capillary attraction, or the use of any absorbent whatever, or any mechanical agency, to be propelled by the revolving action of the journal, the same being arranged and operating substantially as set forth.

No. 17,972.—ALEXANDER B. LATTA, of Cincinnati, O.—*Improvement in Automatic Lubricator for Railroad Car Axles.*—Patent dated August 11, 1857.—The vertical vibrating motion of the cars operates the oiling arm J in the box case, by flapping oil up against the axle B through the medium of spring *x*, rod *w*, and lever *v*.

Claim.—The arrangement of the lever *v*, rod *w*, and spring *x*, combined with the car *y*, as represented, or their equivalents, for actuating the lubricator by the vertical vibrating motion of the cars, as and for the purposes mentioned.

No. 16,796.—JOHN HENWOOD, of New York, N. Y.—*Improvement in Lubricators for Steam Engine Cylinders.*—Patent dated March 10, 1857.

Claim.—The piston B, having the oil cup attached by a hollow stem and provided with a valve *j* working in an oil cylinder C, that is provided with an arrangement of passages *e f f*, substantially such as described, leading to the steam cylinder, valve-chest, or other part to be lubricated, and with a cock having an arrangement of passages *e* f* f* h k*, to correspond with said passages from the oil cylinder, the whole operating substantially as specified.

No. 18,322.—CHARLES CARLISLE, of Woodstock, Vt.—*Improvement in Machine for Packing Wool.*—Patent dated October 6, 1857.—To operate this improved machine an open fleece of wool is spread upon the table and leaves B C B; the sides of the fleece are then folded inwards, partly by hand, or by folding the leaves inwards upon the table, as the case may require, until the fleece is packed straight and even upon the table, which is then moved to the right, and the end of the fleece is brought under and folded around the shaft G; the wrench H being now turned in the direction of the arrow, the fleece is wound compactly and neatly around the shaft G.

The inventor *claims:* First. The shaft G weighted on its bearings and so adjusted as to rise or recede from the movable table B while the fleece is being wound around it, substantially in the manner and for the purpose specified.

Second. The movable table C for the purpose of conveying the fleece to and under the shaft G, while in the process of being wound up.

Third. The oblique anti-friction rollers F F, for the purpose specified.

Fourth. The folding leaves B B as detached from the movable table C, and yet so adjusted as to fold the fleece over and upon the table, and thus to straighten and compress it, preparatory to its being wound up.

Fifth. The method of adjusting the binding twine *c c* so as to bring it under the fleece in position for a neat and expeditious binding of the same.

No. 18,328.—ALBERT DORR, of Orleans, Mich.—*Improvement in Machine for Packing Wool.*—Patent dated October 6, 1857.—The improvements in this invention are shown in the drawings and claim.

The inventor, in setting forth his claims, says: I do not claim the movable or folding leaves *h i j* and K, as my invention; but I do *claim*, First. The press follower H, as in combination with said leaves, or any other box or apparatus for folding or holding wool, and being the bottom of the same, and so constructed as to be raised up for the purpose of pressing the wool, and may be operated by rack W, pinions *v* and Q, spur wheel T, and crank O, as herein set forth, or in any other convenient way.

Second. I claim the rack W, pinions *v* and Q, spur wheel T, ratchet S, ratchet wheel R, the spring *r*, crank O with the shafts P and U, the rack rod G, as described, for the purpose of operating the follower H, as set forth.

Third. I claim the crank X, shaft Y, pinion Z, segment *a*, and spring *p*, substantially in the manner and for the purposes set forth.

Fourth. I claim the treadle *b*, arm *d*, and the rods *e m* and *n*, or their equivalents, for the purposes set forth.

Fifth. I claim the slide twine holders *o o o* and bales *l l*, as described and for the purposes set forth.

No. 18,004.—WILLIAM WILSON, Jr., of Brandywine, Del., assignor to JAMES WILSON, CHARLES GREEN, and WILLIAM WILSON, Jr.—*Improved Drop Press.*—Patent dated August 11, 1857.—As the drop C descends, it forces the spring E back from the die; and as the drop rises, the spring throws the pressed article from the die *b*.

Claim.—The employment of the spring E, when so arranged with the drop C as to effect the delivery of the article stamped, substantially in the manner set forth.

No. 17,978.—WILLIAM NEEDHAM and JAMES KITE, of Vauxhall, England.—*Improvement in Filtration Press for Expressing Liquids from Substances.*—Patent dated August 11, 1857.—The material to be acted upon is forced by a force pump up the supply pipe *a*, and through the conducting pipes *b*, into the corresponding bags, which are within the chambers of the press; the pump continuing to work until the liquid, yielding to the pressure, finds vent through the cloth, runs along the channels *i* and *j*, and makes its escape, leaving the more

solid parts between the floats until the press refuses to receive any more.

The inventors say: We do not claim the exclusive use of any of the parts, taken as parts of the apparatus described and shown, but only in so far as the same is used in combination, for the purpose of our invention.

We *claim* the exclusive use of the combination of parts described, forming apparatus or machinery for expressing liquids or moisture from substances.

No. 16,391.—WILLIAM W. MARSH, of Jacksonville, Ill.—*Improvement in Oil Press.*—Patent dated January 13, 1857.—The boxes F being filled with seed, the pump is started, and the plunger B rises lifting the several trusses E in succession, and causing the pistons *b* to enter the interposed boxes F and express the oil from the seed, which, passing through the perforations *n* into the gutters *c*, thence into gutters *d*, drops through holes *g*, from one truss E to another, and is all collected in the bottom gutter *h*, from whence it escapes by pipe *i* into a suitable receptacle.

The inventor says: I am aware that boxes having hinged sides or ends have long been used in connexion with various kinds of presses, and I therefore disclaim them. But I am not aware that the pistons of oil presses have been provided with flanges or side pieces, extending below the line of the bottom of the piston surfaces, for the purposes set forth.

I *claim* providing the lower or piston surfaces *b* of the trusses E with vertical flanges or side pieces *e e*, when a space is left between said side pieces and the bottom piston surfaces *b*, in the manner and for the purposes specified.

No. 18,502.—T. J. DE YAMPERT, of Mobile, Ala.—*Improvement in Steam Cotton Press.*—Patent dated October 27, 1857.—This invention consists in the arrangement and combination of four piston rods, which unitedly operate the followers of the press, with a central axis and cross-levers located within the steam chest.

The claim of the inventor and the engravings will give an idea of this improvement.

The inventor says: I do not claim the toggle levers *d* and cross levers Q Q, separately or in themselves considered; for they have been previously used and applied in various ways to presses.

Nor do I claim broadly the application of steam power to presses as a motor for presses; an example may be seen in S. G. Cabbell's and A. Seely's rejected application, 1854.

Nor do I claim broadly the union of the upper and lower platens of presses, by means of toggle links; an example may be seen in Aaron Hale's patent, June 26, 1832.

But I *claim* the arrangement and combination of four piston rods F H N N, which unitedly operate the followers of the press, with a central axis R and cross levers Q *d*, located within the steam chest C, as described.

No. 18,864.—JOHN ROY, of New Orleans, La.—*Improvement in Steam Cotton Press.*—Patent dated December 15, 1857.—The claim and engravings explain the nature of this invention.

The inventor says: I am aware that steam has been directly applied to the followers of cotton and other presses, and I do not claim broadly the employment or use of steam cylinders for such purpose.

But I *claim* the employment or use of a plurality of steam cylinders of different dimensions, arranged and applied to the press as shown, or in an equivalent way, so that the cylinders of small capacity may be first used, or used at the commencement of the stroke, and the larger one used near the completion of the stroke, whereby the steam is applied in quantities commensurate with the power required at different parts of the stroke, and a saving of steam thereby effected.

I also claim connecting the piston P^1 with the cross-head E by means of the cylinder S and hollow rod P^2, arranged as shown, and in connexion with the tank or cistern U, and the loaded valve V with levers W attached, whereby a compensating piston rod is obtained, the rod being allowed to contract as the cross-head descends, and to expand as it ascends, and at the same time when expanded or drawn out, being, in consequence of the hydraulic arrangement described, perfectly rigid, so that the full effective force exerted against the piston P^1 will be communicated to the cross-head E and follower D.

No. 18,895.—JOHN EIBERWEISER, of Cincinnati, O.—*Improvements in Wine and Cider Press.*—Patent dated December 22, 1857.—These improvements consist in constructing the platform so that no wine or cider will be wasted, that it may flow easily to the receiver, and that the sides of the double box may be taken away the more easily in order to remove the dregs without disturbing the platform, or any of the other sides of the box; the double box L M N O is so constructed as to let the juice flow freely from the grape. It also consists of a screw and its appendages, so constructed that the foot of the screw, being conical, will prevent any loss of juice through the hole through which it passes in the platform F G H, and as to its appendages by applying iron balls between the smooth surfaces *e* and *c* to give greater power and prevent nearly all friction.

Claim.—The peculiar construction and arrangement of the platform and the double box on a wine and cider press, constructed in such a manner as described.

No. 16,389.—RODOLPHUS KINSLEY, of Springfield, Mass.—*Improvement in Presses.*—Patent dated January 13, 1857.—The article to be pressed is placed upon the platen *r*; and on turning the lever F to a horizontal position, the platen will be raised until struts *s* rest on the highest points of cams *d*; at this point the segment *k* comes in gear with pinion *m*, which by its revolution turns the cam *e* a quarter turn, which slowly lifts the platen *r* still higher off cams *d*, and gives the last powerful pressure.

Claim.—The compound action of the cam and eccentric, or their equivalents, arranged and combined substantially in the manner and for the purposes set forth.

No. 18,862.—C. H. ROBERTSON, of Middleport, N. Y.—*Improvement in Cheese Presses.*—Patent dated December 15, 1857.—The nature of this invention consists in the arrangement of certain devices for the purpose of making a cheese press with movable fulcrums to its levers. The object of this arrangement is to obtain more pressing space with the same power than could be done otherwise.

The inventor says: I *claim* the employment of the slotted box *a* attached to the cross-piece A, for the purpose of confining the levers B, and allowing them to slip on end by means of the slots in said box; thus changing position and gaining the length of the slot in downward motion, in addition to the fixed distance of the levers before a change of the nuts D on the screws C is necessary.

I also claim the combination of the cord E, pulleys *c*, levers B, and slotted box *a*, when arranged with the cross-piece A, and screws C, and nuts D, for the purpose of making a cheese press, such as described and set forth.

No. 16,494.—M. L. PARRY, of Galveston, Texas.—*Improvement in Cotton Presses.*—Patent dated January 27, 1857.—One of the pinions I being thrown in gear with the rim *c*, and motion being given to the driving shaft H, the nut D will be turned, and the follower B will be forced down. The follower is raised by shifting the pinion I by means of the lever J, so that it may gear into the teeth *a* on the nut D, and a reverse motion will be given the nut, and the screw C and follower elevated with a comparatively quick motion.

The inventor says: I am aware that various devices have been invented for changing the motion of revolving wheels and shafts by means of shifting pinions. But I am not aware that a press has ever been made in which there was combined with the screw a nut of the peculiar construction, shown and operating in conjunction with a shifting pinion, as described.

I disclaim the raising and lowering of a screw by means of a nut which is caused to revolve in different directions.

I *claim* the double geared nut D working in combination with screw C, and operated by one or more shifting pinions F, in the manner and for the purposes substantially as set forth.

No. 18,995.—RILEY SMITH, of Towanda, Pa.—*Improvement in Cotton Presses.*—Patent dated December 29, 1857.—The nature of this invention will be understood by an examination of the claim and engravings.

The inventor says: I *claim* so combining a set of falling weights, or their equivalents, with a movable cotton or pressing box and its levers, as that when the united force of said weights is applied to said box, it shall start it up, and draw in its levers, and admit of a better application of the first moving power of the press, as set forth.

I also claim the so applying of the ropes or chains that draw down and force up the pressing-box to the follower, as that the slack of one shall lead or be in advance of the winding up of the other, as set forth, and for the purpose explained.

I also claim the application of the roller T, with its excentric *w*, and pins 1 2 3, for the double purpose of a fastening to said door, and as a means of tightening up the bale ropes, as set forth.

No. 18,766.—GEORGE W. PENNISTON, of North Vernon, Indiana.—*Improvement in Cotton and Hay Presses.*—Patent dated December 1, 1857.—The claim and engravings explain the nature of this invention.

Claim.—Connecting each of the ropes which operate the toggle to work the press and draw back the plunger to separate and independent capstan barrels, arranged to turn freely on the same shaft, provided with a device to lock either of them to said shaft when desired, as described; so as to save three fourths of the time heretofore required to retract the press, and the time and labor of reversing the horse twice for each bale pressed.

No. 18,854.—JAMES MASSEY, of Thomasville, Ga.—*Improvement in Cotton and Hay Presses.*—Patent dated December 15, 1857.—In the engravings A is the cross-sill, to which are fastened the upright posts by means of the cross-tie braces, by means of a staple and key; B are the upright wrought iron posts; *a* the cross-ties or braces; D the ends of the side braces; C^1 the tie braces of iron for strengthening the frame; E the screw; F the top side braces and block through which the screw passes; *b* the adjustable stands; F^1 the boxes.

Claim.—The manner of constructing a portable press by means of the slotted cross-ties let into the posts B, and fastened by keys, as described, thus forming a permanent self-supporting press, readily adjusting, without the use of either bolts or screws to fasten it together, as set forth.

No. 17,053.—GEORGE W. PENNISTON, of North Vernon, Ind.—*Improvement in Self-Releasing Doors of Cotton Presses.*—Patent dated April 14, 1857.—When the plunger *d* arrives at the end of its stroke, the arm *i* attached to the plunger pushes forward rod *e*, and withdraws key *f* from confining the button *g*; the pressure from within then operating against button *g*, causes the latch *h* to fly back, and to open the side doors *m* automatically for the cording of the bale.

The inventor says: I do not claim the duplex toggle joint, nor the mode of operating it described.

But I *claim* the traversing bar *e*, in connexion with the arm *i* of the plunger, for the purpose of retracting the key *f* to release the doors when the plunger arrives at the proper point to make the bale being pressed the size required.

No 17,411.—MILO PECK, of New Haven, Conn.—*Improvement in Drop Presses.*—Patent dated May 26, 1857.—Motion being imparted to the driving gear wheel *j*, the crank *e* raises the drop A to its highest point, when just as the crank *e* passes its centre, the locking sweep *g* is caught, and held by lock *m*, at the same time the dog *a* is tripped out of ratchet *k* by back guard ring *b*, so that the drop A is held suspended; the hub *i*, ratchet *k*, and wheel *j* revolving on the crank shaft. By operating the treadle *z z*, the dog *a* is disengaged from

ratchet *k*, and the drop falls with its whole weight to the anvil B. By operating rod *r*, the guard ring *c*, fig. 3 is drawn outwards, and the dog *a* is thrown out of the ratchet at the bottom; and as the crank *e* revolves, the drop remains on the anvil. By pressing wheel *t* against wheel *h*, the shafts *s* and *d* are locked together by the friction of said wheels, and the fall of the drop is regulated, so that it is made to descend as slowly as the crank *e* revolves, by which arrangement the force of the drop may be adjusted.

The inventor says: I am aware that the V wheels by themselves are common property, and that a patent has been granted to Henry Bushnell for operating a drop by means of V wheels, with a section of one wheel removed, so as to lift the drop by means of the V wheels, and permit it to fall with its full force and I do not claim them when used in any such manner.

I *claim* the combination of the male and female V wheels, with the sweep shaft *d*, the ratchet wheel *k*, the dog *a*, and the guard ring *b*, or their equivalents, so that the fall of the drop can be regulated and controlled substantially in the manner and for the purpose set forth.

Also, the movable guard ring *c*, in combination with the sweep shaft *d*, the ratchet wheel K, and the dog *a*, or their equivalents, by means of which the time the drop shall remain upon the anvil can be regulated and controlled, substantially in the manner and for the purpose set forth.

No. 17,278.—Henry Hughes, Port Gibson, Miss.—*Improvement in Presses for Cotton, &c.*—Patent dated May 12, 1857.—By turning plate D, the rods E^1 are brought to the position represented in dotted lines, and the follower F is raised. It will be seen by the shape of the grooves *a* that the speed of the follower F is quick at first, and gradually diminishes as the substance is compressed.

Claim.—The employment of a grooved plate D, or its equivalent, having a horizontal or other formed surface with grooves thereupon; for the purpose of operating the levers E^1 E^1, in the manner and for the purpose substantially as described.

No. 17,161.—William W. Marsh, of Jacksonville, Ill.—*Improvement in Securing and Guiding the Boxes of Oil Presses.*—Patent dated April 28, 1857.—The guide bars B standing above the trusses C, at the sides of the meal boxes D, and fitting snugly thereto, serve to guide the boxes in and out of the trusses, and also to confine the hinged sides *d* against the outward pressure that is produced upon them by the expressing operation; and at the same time by their tongued form *b*, entering the grooves *e* in the boxes, they connect the trusses with the boxes above them, in such a manner, that when the ram which is at the bottom of the press is withdrawn in a downward direction, each truss is left suspended from the box above it, and consequently adds its great weight to that of the box to assist in drawing the box off the piston, which renders it imperative upon the box to descend.

The inventor says: I do not claim generally the use of longitudinal

guides or flanges at the sides of the trusses to guide the boxes to and from the trusses, and keep the hinged side of the boxes closed.

But I *claim* the employment upon the upper sides of the trusses of the longitudinal guides B B, of such form, substantially as described, that while they serve to conduct the boxes to and from the press, and to confine the hinged sides against the outward pressure, they also serve to connect the trusses with the boxes, for the purpose specified.

No. 17,108.—CORNELIUS MARTRATT, of New Baltimore, N. Y.—*Improvement in Method of Securing the Doors of Hay Presses, &c.*—Patent dated April 21, 1857.—The door D is hinged at K to the frame of the press, and is secured at its other end to said frame, by means of loop E passing over the rounded ends of the battons C. When the bale is pressed within this press, the door B can be opened by operating handle H, which by means of link G withdraws loop E, and causes the door C to open gradually, thus preventing injury to the operators.

Claim.—The form of crank or loop E, the elliptic or eccentric form of the ends of battens C C, and the combination of the one with the other, for the purpose of securing a door or hatch, and for the purpose of preventing a sudden and dangerous start of the door in opening, by means of the gradual movement of the battens outward, as the loop is turned off from them; substantially as described.

No. 16,422.—WILLIAM WILBER, of New Orleans, La.—*Improvement in Oil-pressing Machinery.*—Patent dated January 13, 1857; England, June 12, 1856.—The reduced and heated material, passing out of the end of the concave O of the reducer P, drops on to a heavy hair-cloth belt R, which passes around the two rollers S and T, and being pressed against the leather belt W, the oil is extracted from the material passing through the hair cloth and suitable conduits in the roller T to the ends of said roller, whence it runs into the receiver X. The material then passes between the hair cloths R and *k*; the oil dropping, at this operation, into receiver *l*, while the cake passes out along the bed *p*.

Claim.—Extracting or expressing the oil from tempered oleaginous seeds or other vegetable matter, by pinching and carrying said tempered material between two belts or aprons made of hair cloth or similar heavy porous materials, and thus forcing it through, between compressing rollers, substantially as described; and this I claim, whether the oil be cold pressed or hot pressed, or both, as set forth, or whether used in connection with a reducing apparatus or separate therefrom.

No. 18,367.—WILLIAM WILBER, of New York, N. Y.—*Improvement in Oil-pressing Machinery.*—Patent dated October 6, 1857.—The inventor, in describing the operation of his improvement, says: Steam passes from the boiler, through the pipe O, into the chamber *n n*, through which the coil *m* passes. It parts with its heat to the coil and becomes condensed, and the water of condensation is drawn off through the pipe *p*. The fan J, being put in operation, draws cold air from the cold air compartment of chamber R, and drives it through

pipe *l* and coil *m*. Here the air becomes heated and passes through pipe *q* into the hot air compartment of chamber R, whence it is distributed as follows: A portion of it goes by pipe *r* to the further end of the rollers, and, after heating, returns by the pipe *s* to the cold air compartment; another portion is driven through the pipe *t*, and supplies, by one branch pipe *u*, the blast between the rollers, and by another *w*, that in hopper *c*; pipe *t* itself supplying the crushing and tempering mill. The air lost in these operations is supplied by pipe *x* communication with the cold air compartment of the chamber.

The inventor *claims* the arrangement described of a system of chambers and tubes, in connexion with a fan or other proper blowing or exhausting apparatus, for the purpose of circulating hot air through various parts of the machine, and applying it directly to the seeds and pulp, substantially in the manner specified.

No. 16,381.—THADDEUS FAIRBANKS, of St. Johnsbury, Vermont.—*Improvement in Platform Scales.*—Patent dated January 13, 1857.—The levers C are supported at one end by the arched bridges D, and are suspended at the other to the knife-edge bearings *g* of one of the longitudinal levers E F, E^1 F^1 which are connected to a steelyard lever H, in the usual manner. The platform *c* is supported by the levers C, and the article to be weighed being placed upon it exerts its pressure upon levers *c* and E F.

The inventor says: I do not claim a combination of levers wherein four platform bearing levers are multiplying levers, and radiate from one common centre, and are there suspended to the multiplying lever connected with an equalizing lever, as I am aware that such is a common method of making a platform sclale.

Nor do I claim the combination of a multiplying lever, an equalizing lever, and an equalizing and multiplying lever, as I am aware that such have been employed, and the platform thereof upheld by being made to rest directly on the first and last of said levers. This differs essentially from my combination and arrangement, as by such I am enabled to employ an additional series of levers, viz: the transverse levers C C C, whereby I gain an extra or manifold increase of leverage, and thus render the weighing apparatus useful for determining the weights of railway carriages.

Nor do I claim the employment of a series of transverse and multiplying levers, with a lever composed of a long longitudinal shaft, and an arm arranged transversely and projecting from such shaft, the transverse bearing levers of the platform being applied to the long shaft with reference to its axis, as described.

But I *claim* my improved arrangement and combination of four bearing multiplying levers C C C C, a multiplying lever E, and a lever F, made as described, so as to act at the same time as an equalizing and multiplying lever, the whole being applied to a steelyard weighing lever by means substantially as set forth.

I also claim arranging the suspension bridge so that its arched standards shall extend upward by the sides of the platform, and between it and the sides of the pit, in manner as stated, in combination with arranging the transverse levers C C, and their bearings below

the platform, the same affording the necessary room for the vertical play of the longitudinal levers, while it secures an advantage as regards the depth of the pit as stated.

No. 17,230.—RUFUS PORTER, of Washington, D. C.—*Improvement in the Buckets of Automatic Grain-Weighing Machines.*—Patent dated May 5, 1857.—The apparatus being in the position represented in the engraving, the grain passes from hopper A into bucket E, and the left balance beam F is brought to an horizontal position, the horn *h* depressing wing *k*, whereby the valve L is brought into such a position that the stream of grain from hopper A is divided, and three-fourths thereof is conducted to bucket E^1; in this position all the weights W, with the exception of one, are elevated; but when the bucket E preponderates and raises the bottom weight of the left series, the horn *g* trips the catch lever T, and the valve plate L, being thus liberated, falls into its left position, suspending the descent of the grain in that direction and elevating the tripping point *s*, thereby tripping the left knuckle braces *i j*, and discharging the grain from bucket E, then the trap door *m* instantly closes, and the knuckle-braces resume their ordinary position. The same process is repeated with the bucket E^1, and the index Z is moved one point by the reciprocal motion of fingers *f*.

Claim.—First, the combination of the tripping rods S with the valve plate N, and knuckle braces *i* and *j*, whereby the movement of the valve gate L (which is operated by means of the scale beams F) causes the contents of the buckets E to be discharged alternately, as set forth.

Second. The knuckle braces *i* and *j* in combination with the trap doors *m*, whereby the latter are spontaneously closed and fastened immediately after the grain is discharged, as set forth.

XIII.—GRINDING, MILLS, &c.

No. 18,753.—CHARLES LENZMANN, of Brooklyn, N. Y.—*Improvement in Machine Banding.*—Patent dated December 1, 1857.—This banding is impregnated and covered with a composition of which linseed oil and cement, together with a slow drier, form the principal ingredients; a single web and woven of any suitable fibrous materials is used in a manner peculiar in these respects, viz: First, that it shall be woven of the width of the desired band. Second, that the filling shall be covered by the warp threads. Third, that the filling shall be of threads of greater diameter than the warp threads, and may be of coarser material; this is for the purpose of giving stiffness to the band in the line of its width.

The composition above stated may be varied by substituting other

similar figments to form the body of the composition without essentially changing its character of pliability when dry.

The inventor says: I do not claim the web or the composition separately; neither do I claim broadly saturating webs woven from fibrous materials with the composition above described.

But I do *claim* as a new manufacture the machine banding, substantially as before described.

No. 17,743.—Lucius J. Knowles, of Warren, Mass.—*Improvement in Belt-Shifter for Machinery.*—Patent dated July 7, 1857.—By shifting the frame *e* to the position represented in dotted lines, the belt K will be shifted from pulley D to pulley D^1, as shown in dotted lines, by reason of the tendency of the rollers H I to move the belt K in a line at right angles to the axes on which they turn.

The inventor says: I am aware that a device employing a single roller, and arranged to be capable of being canted, has been used in combination with guard arms on a belt for the purpose of preventing the belt changing its position laterally upon the pulley, or for causing the belt to traverse directly over the turning point of the roller frame, and for righting the belt in case it should deviate from the centre to either one side or the other of the pulley, and I therefore do not claim such an arrangement, as the same was patented by Samuel Sawyer in 1833.

I *claim*, first, shifting a belt or band from one pulley to another by means of two rollers capable of vibration, so as to be set slightly oblique either to the right or left to a line at right angles with the edge of the belt or band, substantially as set forth.

Second. The peculiar construction of the upper roller G, substantially as and for the purpose set forth.

Third. Having the roller H capable of sliding on its axle as it shifts the belt, substantially as and for the purpose set forth.

No. 17,216.—Robert Hale, of Roxbury, Mass.—*Improvements in Machines for Making India Rubber Belting.*—Patent dated May 5, 1857.—The prepared material being cut in strips of the double width of the intended belt is wound upon a hollow shaft a^1, and passes between rollers G, thence between rollers *c*, where it is bent in the shape represented in figure 2; thence between rollers c^1, figures 1 and 3, which bend it further; thence between the rollers *f* and rollers c^2, which bring the edges nearly together, they being kept separated by means of a blade b^1 on plate *x*. The belt then passes between the pressing rollers M, and thence over the roller O; this roller O has a strip of cloth wound around it, which is constantly moistened with camphene from a suitable vessel *m*, and the belt as it passes over said roller has its seam moistened by said cloth, and upon passing between the rollers R a strip of India rubber *x* passing through tube Q is cemented to the belt by the pressure of the rollers R, and the seam is thus closed. The teeth of one of the rollers S complete this process of cementing, and the belt then passes into a box Z filled with powdered soapstone, to prevent the parts of it from striking together when coiled; the belt is then discharged from the machine. To form a three or four-

ply belt, a single or double strip h^1 is fed on the strip g^1 between the rollers G, which is thus enclosed between strip g^1.

Claim.—The manufacture of machine belting by folding and cementing strips of India rubber cloth by a series of mechanical devices, substantially such as described.

Second. The method described of moistening the seam and applying the India rubber strip thereto, for the purpose set forth.

Third. The manner described of applying the middle for a belt of three or more plys by means of guides, the two being united in the manner set forth.

No. 18,650.—Lewis Smith, of Buffalo, N. Y.—*Improved Fastening for Machine Belting.*—Patent dated November 17, 1857.—The claim and engravings show the nature of this invention.

Claim.—A series of curved arms A with faced end fingers C, extending from a bar B on either side and at right angles thereto, composed of one entire piece of metal, being a new article of manufacture, and constituting a belt clasp to be used in joining the two ends of belts in running machinery, in the manner specified.

No. 18,941.—Benjamin Chester, of New York, N. Y., assignor to W. H. Burnap, of Lowell, Mass.—*Improvement in Mode of Belting.*—Patent dated December 22, 1857.—The claim and engraving explain the nature of this invention.

The inventor says: I do not claim an intermediate pulley between a driving pulley and a pulley to be driven by an endless belt, when such intermediate pulley is merely a guide pulley.

Nor do I claim broadly the winding of belts several times around the peripheries of windlasses, for the purpose of obtaining additional friction. Examples of ropes and chains thus arranged may be seen in Dingler's Polytechnic Journal, vol. 81, page 4; H. O. Nicholls' device rejected, 1845; and that of Richards & Winsor, 1854.

But I *claim* the arrangement and combination of a pulley C with the pulleys A B, when the driving belt, after passing around the small pulley B, is led therefrom to and around the pulley C, thence around pulley B to and around pulley A, as and for the purposes described.

No. 18,179.—N. Baumann, of Elmore, Ill.—*Improvement in Flour Bolt.*—Patent dated September 15, 1857—The ground grain passes into case B, through passage *h*, and as shaft C is rotated the beaters *k* will throw the ground grain into recess *c*, the ledge *d* serving to arrest it, and by the concussion the flour will be detached from the bran, the former passing through the cloth F, the latter being fed towards spout *g* by the spiral form of beaters *k*.

The inventor says: I am aware that beaters placed both parallel and spirally with their shaft have been used for similar purposes; I therefore do not claim said beaters separately.

But I *claim* the shell or case B, carved or formed as shown, in combination with the rotating beaters K and frame *e* with bolting cloth *f* attached, the whole being arranged, as shown, for the purposes set forth.

No. 17,126.—JOHN WOODVILLE, of Chillicothe, O.—*Improvement in Mode of Attaching Bolting-Cloths to Reels.*—Patent dated April 21, 1857.—The nature of this invention will be understood by reference to the claim and engraving.

Claim.—Forming the cloth in sections C, and securing the sections to the reel by means of rod K *i* and the bars C, which are attached to the bars *a*, bolts *d*, and the bars *m*, which are attached to the rim *o* by screws *n*, the whole being arranged, as shown, and described for the purpose set forth.

I further claim the bolts *d* provided with the oblong and T-shaped heads *h* and washers *f*, when arranged specifically, as shown, for the purpose set forth.

No. 16,748.—RENSSELAER REYNOLDS, of Stockport, N. Y.—*Improvement in Centrifugal Friction Clutch.*—Patent dated March 3, 1857.—The nature of this improvement will be understood from the claim and engravings.

Claim.—The employment in the combination, substantially as specified, of the sector friction brakes sliding radially in the wheel or pulley which rotates before the clutching takes place, and usually termed the loose pulley, that the other wheel or fast pulley may be clutched by the friction of the brakes due to the centrifugal force generated by the rotation, and by which they are forced onward against the inner periphery of the wheel to be clutched, as described, thereby clutching the parts by a force no greater than that due to the friction produced by the centrifugal force under the determined proportions, weight, and rotative velocity of the friction brakes.

No. 18,927.—GEORGE M. PHELPS, of Troy, N. Y.—*Improvement in Governors for Machinery.*—Patent dated December 22, 1857.—In this invention the device, employed to lessen the speed of the shaft D whenever it becomes too fast, consists of the brake-pad *h* on the lever *i*, hung to the post *j*, so that by pressing up the end *k* of that lever the brake is pressed against the disk *g*, fast on the shaft D, and by pressing the end K down the brake is lifted from the plate *g*. The segment G does not by its own centrifugal power press the brake-pad *h* against the plate *g*—its force is too feeble; but the segment G governs the application of the brake by controlling, by means of the valve I mounted upon and moving with the rod *d*, the motive action or pressure of a current of air, pressing through the conduits *l* and *o q* in the direction of the arrows therein, upon the piston H, arranged within the cylinder O to work the brake lever *i*.

Claim.—Causing the described centrifugal governor, or its equivalent, to regulate the rotary motion of the shaft with which the governor is positively driven by making the governor control by means of a valve the motive action of a current of air or other gaseous fluid upon a piston, or an analagous device arranged to work the mechanical contrivance by which the speed of the said shaft to be regulated is immediately changed, substantially as set forth.

No. 17,325.—J. R. GATES, Eckmansville, Ohio.—*Improvement in Machines for Cleaning Grain.*—Patent dated May 19, 1857.—The grain passes from hopper *e* into the part *b* of the box H, and drops on to screen b^1, whence it is conducted into box A. While the grain is passing down part *b*, the blast generated by fan F draws the light matter, chaff, &c., up over the top of the partition *d*, and the light imperfect grain falls out at the lower end of part *c*, while the lighter substances are drawn into the fan-box E, and forced out of its discharge spout. The sound grain passes into the box A, is scoured by beaters *a* and burr-stones B, and the grain falls through opening *j*, while the dirt is drawn through the perforated cover *l*, by the fan G, and forced out through the discharge spout of the fan-box D.

The inventor says: I *claim* the box H, divided into two compartments by the partition *d*, the fan-box E, and scouring box A, provided with the stones B, and rotating beaters *a*, when the parts are arranged relatively with each other, as shown.

It being understood that I do not claim separately either of the parts specified, but all the said parts, when arranged and combined so as to operate conjointly, as shown, for the purpose set forth.

No. 17,363.—SAMUEL CANBY, of Ellicott's Mills, Md.—*Improvement in Grain Scourers and Separators.*—Patent dated May 26, 1857.—The grain is fed to the machine at *p*, and passes through hopper L to the centre of the upper scouring disk I, and being operated upon by spikes *e* it passes over the edge of the disk I into the upper scouring hopper F; the dust, already separated, passing through the perforations *b*, whence it is carried off by the fan blast created by fan P. In this manner the grain passes in successions over the entire series of disks and scouring hoppers. On passing off the lower disk, the grain falls into the blast coming in from below, and a final separation of all impurities takes place, the cleaned grain passing from the machine through spring trap Q, while the impurities are discharged through mouth M of the fan-chamber.

The inventor says: I do not claim, of themselves, scouring disks or rubbers, as such are elements well known in all smut machines.

But I *claim* the series of scouring disks I, and self-adjusting conical rubbers J, on the same shaft and alternating with the disks, in combination with the hoppers F, performing the double function of rubbing and concentrating the grain; the perforated casing G surrounding all of the disks except the lower, and the tight outer casing A, arranged and operating substantially as described, to effect a progressive cleaning and final separation of the grain.

No. 16,439.—GEORGE HEBERLING, of Quincy, Ill.—*Improvement in Grain Separators.*—Patent dated January 20, 1857.—The grain is fed into the opening *a*, and acted upon by teeth *d* and corrugations *e*, which clean the grain from dust, and passing between plate C and revolving cone D it falls over the edge of cone D, where it is caught by fan beaters F, by which it is thrown and beat around until it falls on the curved rim M; it is then conveyed to the sides of cone C, operated upon by beaters G, and, when scoured, passes out into the spout

J; here it is acted upon by a blast from fan H, which drives the light grains up the vertical portion of spout J, where the light grains fall over behind the plates *h*, while the cheat and shrunk grains fall behind the valve F.

Claim.—I distinctly disclaim the invention of the separate devices described, as no one of them is new; but—

I *claim* the arrangment in a grain-cleaning machine of the plate C armed with teeth *d* and rubbers *e*, the conical cylinder D, with beaters and fans F and G, attached chute or rim M, plate N, tubes *b*, and fan H, all constructed and operated substantially in the manner set forth.

No. 16,471 —MICHAEL DE CAMP, of South Bend, Ind.—*Improvement in Grain Separators.*—Patent dated January 27, 1857.—The shaft 6 being set in rapid motion, the fan 8 9, divided into two parts by disk 10, creates a vacuum both above and below the disk, by expelling the air through one common outlet 12. The air rushes in with force through the indraught screen 2, to supply the vacuums above the disk, meeting the grain which is fed in at hopper 1. The sound, heavy grain descends through spout 20 into the scouring mill D, where it is subjected to the action of the beaters 16, but the light grain, dust, &c., are carried up through flue 22 into the chamber 25; the current here dividing and passing into flue 23 and 24 is so much diminished in strength that the light grain, cheat, &c., will fall into chamber 25, while the dust, chaff, &c., is carried up through flues 23 and 24 to the fan, whence it is discharged into the open air.

The inventor says: I *claim*, first, the combination of the flue 22 with the flues 23 and 24 and chamber 25, constructed and arranged, as herein described, for the purpose of separating light grain, wheat, &c., from still lighter substances, by dividing the current of air in the manner described.

Second. I do not claim two fans upon the same shaft, separated from each other by a fixed partition; but I claim the construction of the fan by combining with a disk attached to a rotating shaft leaves fixed upon each side of the disk, as specified.

No. 17,498.—ELISHA DOUD, of Oshkosh, Wis.—*Improvement in Grain Separators.*—Patent dated June 9, 1857.—The grain to be cleaned passes through hopper P, and as the machine is set in motion the screens *g* and O are vibrated, and the larger foreign particles are drawn by the blast of fan F over the end of board *b* down the trunk D, and are discharged at the bottom of the fan-box E. The grain drops on to screen O, and the cockle, which will not be acted upon by the suction, on account of its gravity, will pass through the inner part of screen O, and will be discharged from the end of board *h*.

The inventor says: I am aware that fans have been employed in various ways for generating blasts, and screens have also been used and applied in various ways in grain separating machines.

I therefore do not claim either of the parts described separately or in themselves considered.

I *claim* the vibrating shoe N, provided with the screens *g o*, and

arranged relatively with the box or chest C and deflecting board *b*, as shown, in combination with trunk D and fan E, for the purpose set forth.

No. 17,728.—AMASA CURTIS, of Lena, Ill.—*Improvement in Grain Separators.*—Patent dated July 7, 1857.—When the grain is mixed with considerable chaff, straw, and light foreign matter, the valves *i* and *h* should be adjusted in such a manner that valve *i* is opened, and valve *h* is closed, and the blast may pass through the screens *e* F from below, in order to prevent them from being choked. But when the grain is mixed with dust, and finer, heavier substances, the valves *i* and *h* should be adjusted as represented in the engravings, and the blast will pass over and between the screens *e* F.

The inventor says: I do not claim the adjustable slats *m*, nor the valves *i h* in the fan-box C, that is, separately, or in themselves considered, for they, or their equivalents, have been previously used.

But I *claim* the auxiliary shoe D, provided with the adjustable slats *m*, in combination with the valves *i h* in the fan-box C, the above parts being arranged, as shown, for the purpose set forth.

No. 17,853.—WILLIAM ZIMMERMAN, of Quincy, Ill.—*Improvement in Grain Separators.*—Patent dated July 21, 1857.—The grain passes from hopper R down on to the rotating disk P, and is thrown by the centrifugal power of said disk within the tube L; at the same time the fan A causes a current of air to pass into the machine between the tube Z and the spreader Y, which, passing up through pipe L, comes in contact with the descending grain in L, carrying the cheat up to sittle in box S, while the grain escapes below.

Claim.—The perforated rotating disk P, with its diamond-shaped ring, or its equivalent, on the same shaft, with the fan arranged and operated so as to throw the grain by centrifugal force into the blast-pipe horizontally, substantially as described. The cheat box W around the suction pipe, in combination with the tunnel-shaped delivering tube X and spreader Y, arranged substantially as described, so as to make the grain descend through the blast of air and through a tunnel-shaped pipe, substantially as and for the purpose specified.

A conical plug V, arranged so that it can be adjusted in the suction pipe, substantially as described, to graduate the flow of the blast in the suction pipe, and regulate it as desired.

No. 18,761.—JOHN R. MOFFAT, of St. Louis, Missouri.—*Improvement in Grain Separators.*—Patent dated December 1, 1857.—The operation of the falling sections is as follows: At the upper or advancing part of their motion, the sections B^1 remain closed by their own weight, forming a continuous conveyor for the straw; but after passing over the large carrying roller on pulley D they are supported by the chute-board C until their return motion; approaching the lower end of the apron, where the greatest accumulation of matter takes place, they escape from the chute-board, and at this point the beater A, rotating in the direction indicated by the arrow, operates in connection with the falling section and effectually removes any such accumulation.

Claim.—The construction and arrangement, substantially as described, of the rotary beater A within the apron, in combination with the falling sections B^1, operating in the manner and for the purposes set forth.

No. 18,444.—ABRAM GAAR, of Richmond, Ind.—*Improvement in Screens for Grain Separators.*—Patent dated October 20, 1857.—The straw chaff and grain being indiscriminately thrown upon the screen the straw will ride along over the top of the strips, and the blast from the fan-blower, passing up through openings C, is directed forward by the strips D, and meeting the chaff and light material blows it out, whilst the heavy grains roll down the upper inclined sides of the strips, falls through the apertures C, and is conveyed by a chute or spout out of the machine in the usual manner.

The inventor says: I am aware that a riddle has been made of slats alone; and I am also aware that a screen has been made out of a punched plate, and in some cases that a tongue has been left in the aperture, which was bent upward to direct the blast, but that in this latter plan the grain had little or no facility for passing through the apertures. I claim none of these things.

But I *claim* a screen composed of a thin piece of metal punched with suitably shaped apertures, with narrow strips of metal extending across and riveted to said plate of metal, and overhanging said apertures at any angle greater than that of the plate, for the purpose of allowing the grain to pass through the apertures of said plate, giving direction to the blast, and at the same time preventing straw or chaff from entering said apertures, as set forth.

No. 18,137.—CHRISTIAN CUSTER, of Philadelphia, Pa.—*Improved Machine for Drying Grain, &c.*—Patent dated September 8, 1857.—The grain passes from hopper L down on shoe M, and on to the upper plate K, passing down said plate over its edge on to the lower plates K, and escapes through spout J. The shaft E and plates K, as they revolve, have a vertical reciprocating motion imparted to them by means of tappet C, which operates lever F of fulcrum *b;* the grain is thus caused to pass in a thin sheet through the machine, and is dried as it passes between the heated plates and pans.

The inventor says: I am aware that kilns, or devices provided with drying cylinders or chambers heated artificially or by stoves, have been arranged in various ways, and therefore I do not claim separately or independent of their construction and arrangement, the parts shown and described.

But I *claim* the rotating and vertically reciprocating drying chamber, formed of the series of vessels or pans J and guide-plates K, placed on the shaft E, and constructed and arranged as shown, in combination with the furnace B, drum A, and hot air chamber D, the above parts being arranged relatively with each other, as and for the purpose set forth,

---

No. 17,966.—J. B. GOWDY and J. A. WELSH, of Xenia, Ohio.—*Improvement in Hominy Mills.*—Patent dated August 11, 1857.—The corn is fed continuously into the upper end of case A, through opening

l; and motion being given to shaft C, the corn is acted upon by the beaters *f*, which scour and crack it as it passes down, as indicated by the solid arrows, the flanches *e* preventing the corn from rising. The flour and dust is blown out through the slots *c* by the blast generated by screw *a*, the blast passing down shaft C and out through holes *b*, as indicated by the dotted arrows. The hominy is discharged by the beaters *i* through gate *j*.

The inventors say: We are aware that beaters secured to rotating shafts, and placed within a case, have been previously used for cracking corn, and for analogous purposes. We therefore do not claim the beaters *f* attached to the shaft C separately or in themselves considered.

But we *claim* the shaft C, provided with the beaters *f* and flanches *e*, in combination with the horizontal plates *d* within the perforated case A, substantially, as shown, for the purpose set forth.

No. 18,232.—George C. Burt, Abram Wright, and George F. Wright, of Harvard, Mass.—*Improvement in Horse Powers.*—Patent dated September 22, 1857.—This improvement consists in giving such a shape to the ends of the side tracks to horse powers that closely-fitted platform chains of any desired width of sections can be fitted tightly to said tract, and yet pass over their extremities with a perfect and unvarying smoothness, not embracing the track more tightly at one point than at another; this is shown by the exact position of the links, wheels, and tracks. In fig. 2 it will be seen by the position of the platform sections of chain marked *g* that the flexible joints at their angles are on the semi-circular line; but when moved forward one-half the length of a link or section, as represented by the lines marked *i*, the flexible joints of the sections or links come within the semi-circular line sufficiently to allow the end of the link to arrive at *j*, as represented in the drawing.

The tension of the chain and the position of the links being equal, also the position of the links marked *m* being moved forward three-fourths the length of a link, the flexible joints can come within the semi-circular line in proportion to their position, the wheels all resting on the improved shaped track, and the ends of the links meeting at their proper points, as shown in the drawing, obviates all unequal strains or motion.

The inventors *claim* the method by which we are enabled to unerringly give such a shape to the ends of the tracks of said machine that closely-fitted platform chains may be operated upon them without producing any variation of tension or irregularity in the movement of said chains, substantially as set forth.

No. 16,612.—Cyrus Roberts, of Belleville, Ill.—*Improvement in Attaching the Arms of Horse Powers.*—Patent dated February 10, 1857.—When the machine is at rest, each sweep J is suspended between two arms I by means of the link rods K. When the machine is in motion, each sweep will be suspended behind to the arm I, and in front by the traces to the horse. Thus the sweeps will be relieved from sudden jerks of the horses, and all the parts may therefore be

1857.—The claim and engravings explain the nature of this invention.

The inventor says: I do not wish to be understood to claim a double series of spouts and valves, as that has been done before.

But I *claim* the adjustable or hinged spout, or series of adjustable or hinged spouts, as described, for the purpose of rejecting, mixing, separating, re-jolting, or re-grinding and re-bolting any portion of the lower grades of flour, as set forth.

Second. I claim the combination of the adjustable or hinged spout, or series of adjustable or hinged spouts, with a single series of slide valves or valve, the circular division *y*, the conveyor J, and scraper N, as set forth.

No. 16,325.—JAMES CULBERTSON, of Covington, Ky.—*Improvement in Grinding Mill.*—Patent dated January 6, 1857.—The feeding channels *n* on the periphery of the burr C, in connexion with the feeding channels *u* on the inner surface of schell B, allow grains of corn and pieces of cobs of considerable size to be admitted for pulverizing; these grooves become filled with coarse grain and particles at the top, while the finer particles sift down between the coarser ones. The meal at the bottom of these feeding channels, which is about fine enough to be discharged, is only subjected to so much grinding surface as exists between the respective feeding channels *n* and the next following discharging channels *x*, and then drops out, whereas otherwise it would continue between the grinding surfaces till it is slowly discharged by the furrows.

Claim.—The combination of the long feeding channels *w w* in the grinding surface of the burr, with the discharging channels *x x* situated in positions just preceding the feeding channels in the revolution of the burr, arranged and operating substantially in the manner and for the purposes specified.

No. 17,619.—EZRA COLEMAN, of Philadelphia, Pa.—*Improvement in Grinding Mill.*—Patent dated June 23, 1857.—To regulate the cut of the revolving cutter F, the concave G can be adjusted on its bed circularly by means of slot *m* in the bed and set-screw *n*, whereby the teeth *h* of the concave may be set in longer or shorter gear with the teeth *g* of the rotary cutter. The grinder D can be adjusted longitudinally by operating set-screw *z*, said grinder being secured firmly on shaft C; and in adjusting the grinder, the position of the cutter F is not effected, as it is kept in its proper place by means of collar *k*, and is connected with shaft C by means of a key sliding in a groove *l*.

The inventor says: I am aware that concaves have been adjusted eccentrically in order to grind finer or coaser, but not to grind faster or slower; therefore I do not claim an eccentric adjustment of the concave of a grinder.

I *claim* having the concave of a cob cutter adjusted in a circular line concentric with its axis and relatively to the mouth of the feed hopper, by means substantially as specified, so that it may be set to grind faster or slower, substantially as and for the purposes set forth.

The means specified for insuring the rotation of the cob cutter with

the grinder, and its retention in proper place where the grinder is adjusted longitudinally, substantially as and for the purposes set forth.

No. 18,178.—AARON ARNOLD, of Troy, N.Y.—*Improvement in Grinding Mill.*—Patent dated September 15, 1857.—The material to be ground is fed into hopper O, and as the cone J revolves, the material drops into the spaces *g*, and is carried around by said cone, and ground by the grinding surfaces of the cone J, concave G, disk I, and flange F; the disk I and cone J are secured to plate H by means of screws *b*.

Claim.—The combination of the rotating disk or plate I, and cut or sectional cone J, with the interior of the concave G, and flange F, for the purpose of feeding into the mill, and grinding large substances, such as corn on the cob, and as set forth.

Also securing the cone and disk or plate I to the shaft through the intervention of the face plate H, substantially as set forth, so that said cone and disk may at any time be removed and replaced by others when they become dull or worn away.

No. 18,610.—CHARLES TRIPP, of Ann Arbor, Mich.—*Improvement in Grinding Mill.*—Patent dated November 10, 1857.—The operation of this invention is as follows: The grain or substance to be ground is placed into the hopper E, which passes of its own gravity down the inclined sides *f* of the projection *e* and into the recesses *h*, where it is ground or cut by the burr F, the ground material passing through the edges *q* of the rests of the openings *l*, through which it passes into annular trough I. The edges *q* are adjusted nearer to or further from the burr E, so that the substance may be ground coarse or fine, as desired, by turning the ring H; the wedged-shaped projection *j* at the under side of the ring, acting against the projection *i* on the rests G, move the rests inward, and the pins m^1, in consequence of fitting in the slats n^1, draw them outward.

The inventor says: I do not claim a burr formed of a series of saws for grinding, for such device has been previously used; although perhaps preferable thus constructed is not absolutely necessary in my improvement, as burrs constructed in other ways, and of a different material—such as stone—may be used with success.

But I *claim* the adjustable rests G, placed between the projection *e* and the plate C, constructed substantially as shown, and provided with the discharge throats I, in combination with the burr F, it being understood that I do not confine myself to the ring H, and other parts shown and described, for adjusting the rests G, but claim such means or any other means arranged to effect the same purpose.

No. 18,923.—JOHN R. MORRISON, of East Springfield, Ohio.—*Improvement in Grinding Mill.*—Patent dated December 22, 1857.—The claim and engravings explain the nature of the invention.

The inventor says: First. I *claim* hanging the bed stones C C on cleats or pins *r r*, and operating said stones by means of said pins in slots or grooves in the frame, for the purpose of adjusting the stones, as set forth and described.

Second. I claim the combination and arrangement of the lever G,

screw *h*, and sleeve n^1, with the stones C C^1, when arranged and operated as set forth and for the purpose described.

Third. I claim the arrangement of the runner C between two bed stones C C, when said runner has a flouring dress on one side and a chop dress on the other, for the purpose of grinding different kinds of grain and feed at the same time, as set forth.

No. 16,383.—SANDFORD E. FITCH and THEODORE SHARP, of Greenbush, N. Y.—*Improvement in Flour Bolt as applied to Grinding Mill.*—Patent dated January 13, 1857.—The shelf M receives the meal as it is thrown out from the part of the cylinder B nearest the supply end into division 1, and carries it upon the first division of bolt N, from which place particles not running through the bolt pass by the oblique slots F into the mill to be reground; this operation be repeated in reference to each successive division of shelf M and bolt N.

The inventors say: Disclaiming any arrangement of the oblique ribs, for the purpose of returning the material being ground, or part of the same, to the mill, for regrinding, other than that specially set forth.

We *claim* the employment of the shelf M and bolter N, constructed and arraged in reference to each other, so as to take the meal from the mill and bolt it in successive and graduated portions, so as to prevent the finer portions of the meal from continuing unnecessarily in the mill, whilst the coarse particles return to the cylinder to be reground, or in certain cases the substitution of a shelf in place of the bolter, for the purposes and in manner and form as set forth.

No. 18,637.—W. W. HAMER, of Cincinnati, Ohio.—*Improvement in Flour Distributing Bolt for Grinding Mill.*—Patent dated November 17, 1857.—In the engraving, *a* represents the bolting chest provided with a reel B B, and conveyors *d* and *f* are put in motion with the gear wheels 5 6 and 7, which wheels receive their motion from the mill spindle.

The nature of this improvement consists in the precise combination of the conveyors and their compartments joined with each other, and with the bolting chest for passing the middlings, &c., directly from the "flour conveyor" into the ground grain conveyor for rebolting the middlings, shorts, &c., by being carried up with the ground grain and deposited again in the reel for rebolting.

The inventor says: I disclaim the use of the conveyors for mere conveying purposes, as they have often been used for such before.

But I *claim* the exact combined arrangement of the conveyors *d* and *f* and their compartments, when united together with the openings *g*, as represented and specified in the specification, for the purposes before mentioned.

No. 18,412.—WILLIAM S. REEDER, of St. Louis, Mo.—*Improvement in Elastic Coupling for Mill Shafting, &c.*—Patent dated October 13, 1857.—This improvement consists in the use of a driver or drivers *d*, secured in any suitable manner to the shaft of the driving pulley, when used in connection with a plate or arms securely attached to the

shaft upon which the saw is mounted, having mortises through it, or their equivalents, through which the drivers pass, and with which they engage driving the saw, friction rolls being suitably arranged, against which the drivers play in the longitudinal motion of the saw shaft, it being for this purpose supported and working in bearings independent of the bearings of the pulley shaft, by means of which the saw shaft is so arranged as to have the free end play whilst the other has its journal boxes fitted closely to its shoulders, thus preventing freedom of motion. This improvement further consists in the arrangement and combination of adjustable springs *g g*, with the drivers *d*, and mortised disk C, by means of which the end play of the saw is adjusted and regulated.

The inventor says: I *claim*, first, The method, substantially as herein described, of coupling and driving shafts for the purposes set forth.

Second. The arrangement of springs *g* and *g*, or any equivalent arrangement, when used in connection with shaft couplings, substantially as set forth.

No. 18,234.—EDWIN CLARK, of Lancaster, Pa.—*Improvement in Bearings for Mill-Stone Drivers.*—Patent dated September 22, 1857.—This improvement refers to bearings for drivers for mill-stones, described as follows by the inventor: Within a suitable recess or cavity in the upper stone *a* I insert a metallic bearing block *b*, in which is held the rocking bearing *c* constructed as follows: this bearing consists of a cylindrical portion *d* and a wing portion *e*. The cylindrical portion is inserted in a suitable cavity or box in the bearing block, and turns in this box to the extent of the opening or slot *n*, through which the wing portion projects. On opposite faces of the extremities of the mill-driver *a* are recesses *m* to receive the bearing edges of the wing portion of the rocking bearing *e*. When the stone and drivers are set up and in place it will be seen that as the shaft revolves the driver presses upon the edges of the rocking bearings, and the combined action of the rocking bearings and the pivot bearing *p* gives the advantages of a universal joint in regulating the running of the stones, while the construction is more economical and efficient. Sufficient space is left on either side of the driver to admit of its various positions in the rising and falling of the stone from obstructions or disturbing causes.

The inventor says: I *claim* the rocking bearing, consisting of a cylindrical portion *d*, inserted within a cavity in the bearing block *b*, and a winged portion E passing through a slot in said bearing block, in combination with the bearing recess *m* in the driver, as set forth.

No. 18,741.—JOSEPH H. GLOVER, of Skeggs Creek, Ky.—*Improved Balance Iron for Mill-Stones.*—Patent dated December 1, 1857.—The engravings and claim show the nature of this invention.

The inventor says: I am aware that the bails of mill-stones have been provided with blocks which, were interposed between the point of the mill spindle and the interior surface of the bail.

But, to the best of my knowledge and belief, it is new to render

such blocks adjustable by means of screws, whereby the stone may at all times be readily balanced, and a better operation of the parts be thus secured, and the quality of the flour improved.

In the patent of E. R. Benton, March 31, 1840, a block is interposed between the point of the spindle and the bail. I disclaim everything contained in the patent of said Benton which resembles my improvement.

I *claim* the block B, when made adjustable from the exterior of the bail by means of screws *d*, as and for the purposes set forth.

No. 18,848.—NELSON HAYWARD, of Cleveland, Ohio.—*Improvement in Dress of Mill-Stones.*—Patent dated December 15, 1857.—The engravings and claim explain the nature of this invention.

The inventor says: I *claim* making the deep portion of the furrows sufficiently wide from the eye half way to the periphery or thereabouts, with a flat or nearly flat bottom, parallel or nearly parallel to the face of the stone, as described.

I also claim lands made in the form represented, or in an equivalent form, whether used in combination with furrows having parallel bottoms, as described, or otherwise.

No. 16,615.—BENJAMIN D. SANDERS, of Holliday's Cove, Va.—*Improvement in Instruments for Facilitating the Facing of Mill-Stones.*—Patent dated February 10, 1857.—The arm D carries at its lower end a quill or other elastic pointer *i*, which, in being moved over the stone, will indicate by sound its contact with any irregular raised portion in its surface, without disturbing the adjustment of the swinging beam, &c. The adjustment, by means of slots *f h* and set screws *d g*, will be understood without further description.

The device may be placed at one side of the stone, as seen in fig. 2, for the purpose of detecting convexity or concavity generally in the surface of the stone.

The inventor says: I do not claim any of the parts described, used separately.

But I *claim* the instrument described, consisting of the slotted beam C, cross arm D, elastic pointer *i*, box B, carrying the adjusting screw *b*, spindle *a*, and adjustable base or stand A, or the equivalent of these devices, constructed and arranged in relation to each other for joint operation, substantially in the manner for the purpose set forth.

No. 17,446.—MILTON PAINTER and CHARLES PAINTER, of Owing's Mills, Md.—*Improvement in Feeding Grain to Mill-Stones.*—Patent dated June 2, 1857.—The grain from hopper H passes through the tube I into the cup L, and as the runner A rotates the cup L is swayed or inclined in varying positions, and the grain is pushed out of the cup and passes therefrom down through the tube K between the two stones; the amount of feed being regulated by raising the bearings *a*, and thereby giving the cup L a greater or less inclination, as may be necessary.

The inventors say: We disclaim every part and feature of our device which is seen in any other grain feeding apparatus.

But, to the best of our knowledge and belief, it is new to regulate the feed of the grain by the swaying of a cup L, which is located and combined with and at the mouth of a swinging tube, as described.

We *claim* in grain feeders, regulating the feed of the grain by the swaying of the cup L, in the manner substantially as described.

No. 18,191.—EDWIN CLARK, of Lancaster, Pa.—*Improvement in Hanging Mill Stones.*—Patent dated September 15, 1857.—The stone J is hung in ring I by pivots *e*, and can swing on these pivots; the ring I is hung to the boxes F by means of pivots H and *c*, which are at right angles to pivots *d;* the position of stone J can be adjusted by turning crank G, and said stone will adjust itself to a horizontal position by freely swinging on pivots *e d*.

The inventor says: I do not claim hanging the upper stone in a balanced rim or gimbal joint, as this has heretofore been done.

But I *claim* so uniting the rim which supports the upper stone to the frame of the mill by sliding blocks or followers, as to allow an upward play or automatic adjustment of the upper stone, and at the same time admit the usual hand adjustment by set screws, if desired, substantially as described.

No. 17,421.—WM. A. CLARK, SAMUEL D. PORTER, and WM. D. SIMPSON, of St. Louis, Mo.—*Improvement in Method of Hanging Millstones.*—Patent dated June 2, 1857.—The upper grinding stone A is suspended to a portion of the frame of the mill by means of a ball and socket joint D E, and the eye of said stone loosely embraces the upper end of the spindle N of the runner S, which is secured thereto by means of an elastic packing P, which acts with sufficient force to retain said stone in such a position as to keep its face parallel with the face of the running stone, when the mill runs empty; the packing P yields to any extent, for the purpose of equalizing the work throughout the entire surface of the stones.

Claim.—Suspending the upper stone from above by means of a ball and socket joint, or its equivalent, when the eye of the said stone is made to embrace the upper portion of the spindle of the running stone, and is secured thereto with a sufficient degree of rigidity by means of an elastic packing, substantially in the manner and for the purpose set forth.

No. 17,326.—W. Y. GILL, of Henderson, Ky.—*Improvement in Machines for Re-dressing Millstones.*—Patent dated May 19, 1857.—To dress the lands of a millstone, the apparatus is placed on the millstone so that the picks E will move from the eye towards the periphery. By turning crank D, screw D causes the picks to move in a line from the eye to the periphery, while the cams *h* operate the picks, which thus cut a radial line until they are stopped by the sill b^1. To dress the furrows, it is simply necessary to have the picks traverse from end to end, and to adjust them to the gradually increasing depth.

Claim.—The combination of two or more picks E E with the guiding and operating screw shaft B and lifting cams *h h*, when said parts are

constructed, and arranged, and operated in manner and for the purpose set forth.

No. 18,993.—H. O. SHEIDLEY, of Republic, Ohio.—*Improvement in Cider Mills.*—Patent dated December 29, 1857.—The cap piece G is moved downward by the action of the cam lever L having a movable ratchet piece I. This rachet piece moves downward between the cheek-pieces *g g*, and is held in any desired position to resist upward pressure by the ratchet *r*. The levers *l l*, having the small cams *c c* upon them, force the ratchet piece I back upon the ratchet *r* when said piece is to be held firm. When these levers are in the position shown by l^1, the ratchet piece can be moved forward and allowed to drop; stem *d* is hollow, and has openings leading from outside to inside. Within the curb A is a follower F which rests upon the pomace, and is forced down by the descent of the cap piece G passing over the stem *d*.

The inventor says: I *claim* the hollow stem *d* in communication with the interior of the curb in combination with the follower and curb, substantially as and for the purposes set forth.

I also claim the combination of the cap piece G, ratchet piece I, ratchet *r* with its cheeks *g g*, cam lever L, and secondary levers *l l*, arranged and operating as set forth.

No. 17,667.—ALFRED T. CLARK, of Lancaster, Pa.—*Improvement in Distributing Apparatus of Flouring Mills.*—Patent dated June 30, 1857.—The spouts D are arranged in succession under the lower end of a bolt C, for the purpose of discharging the various qualities of flour separately into their proper receptacles. The flour to be run off is discharged through *a*, the valve a^2 being open and valve a^4 being shut. If the flour is to be returned for further sifting, the valves a^2 and a^4 are both open, and the flour passes into conveyor A to be returned to the bolt; and when it is necessary to return the bran or any other quality to the mill, the valve a^2 is shut, and the flour or bran drops into conveyor B.

The inventor says: I am aware that a single series of spouts has been connected with a bolt, as in the patent of E. and J. M. Clark, patented June 5, 1854. I shall not therefore lay any claim to this device, but limit my claim to the double series of spouts and valves, so arranged in connexion with the bolt and open conveyor A as to give me facilities for separation and mixing not attainable by a single series.

I *claim* as my improvement on the mill of E. and J. M. Clark, patented June 6, 1854, the double series of spouts and valves, arranged and connected with the bolting chamber, substantially as set forth.

Also the arrangement of the conveyor A in combination with the double series of valves and spouts, as set forth.

No. 16,508.—WILLIAM WILBER, of New Orleans, La.—*Improvement in Mills for Tempering Oleaginous Seeds.*—Patent dated January 27, 1857; England, June 12, 1856.—A jet of steam enters from steam pipe *r* into the chamber T, thereby heating the concave *g g*, and with

it the seed, during the process of grinding. The seed passes then up to plate K, and thence into the cylinder L. This cylinder has a hollow shell, which contains the space *a*, into which steam is introduced by means of pipe M; the stirring apparatus N prevents the ground seed from getting overheated. The ground seed, passing through the inclined cylinder, leaves through opening *n*, and passes into the sliding box P. The chamber R, being filled with steam, keeps the ground seed contained in box P hot.

Claim.—The arrangement of machinery by which oleaginous seeds, as they are being tempered, shall be subjected to the direct action of steam, in their transmission through the machine from the grinding to where they are taken preparatory to their being pressed, as described

---

No. 17,985.—Otis W. Stanford, of Cincinnati, Ohio.—*Improvement in Dress of Grinding Surfaces for Grain Mills.*—Patent dated August 11, 1857.—The nature of this invention will be understood by reference to the claim and engravings.

The inventor says: I do not wish to be understood as claiming any particular number of concentric channels *f* and grinding surfaces *g*, nor the shape of said channels and the manner of furnishing the grinding surfaces with teeth.

But I *claim* the alternate channels *f* and grinding surfaces *g*, as represented on the surfaces of the plates *d* and *h*, when said alternate channels *f* and grinding surfaces *g* are made concentric with the centre of motion given to the plates, and when arranged with each other and operated in the manner and for the purposes shown in the specification.

No. 17,116.—Ezra Ripley, of Troy, N. Y.—*Improvement in Grinding Mills.*—Patent dated April 21, 1857.—When the mill is turned, the axis of plate F is carried in a circle, by the eccentric E, around that of the constantly revolving plate D, so as to thereby feed the material to be ground outward in every direction from the centre of the plates. In connexion with this movement, the plate F is, at the same time, oscillated about its point of connexion with the check bar G as a centre, across the face of the rotary plate D, so that the lower portion of the plate F may have a more active and extensive vibratory movement to prevent clogging than any other part thereof.

Claim.—Giving to the grinding plate F, when it is applied to a constantly revolving grinding plate D, the positive twofold eccentric and swinging movement described, substantially in the manner and for the purposes set forth; in contradistinction from giving to the grinding plate F, when used with a rotary grinder D, a simple eccentric swinging or reciprocating motion, or any other simple or compound movement heretofore positively communicated thereto in grinding mills.

No. 18,163.—William Stauffer, of Middleburg, Ind.—*Improvement in Grinding Mills.*—Patent dated September 8, 1857.—The arm *a* is made to lie on one side of the hopper by the weight of the grain therein; and when the grain is run out, said arm rises, causing arm

b to descend and to come in contact with cam I of shaft G^1; which cam gives the arm *b* a lateral motion, which causes lever *c* to slide, and allows beam J to rise; and by the arrangement of beam J with rod *m*, the gate F of the water wheel, in combination with the connecting beam K^1, the weight F, and roller *g*, causes rod *m* to descend and stop the flow of the water to the wheel by gate F being shut down in flume E.

Claim.—The combination and arrangement of the arm *a* with the arm *b* and the sliding rod *e*, together with the cam I on the shaft G^1, the beam J, the rod *m*, the weight *f*, and the connecting beam K^1, for the purpose of arresting the motion of the mill, substantially in the manner shown.

Also the arrangement of the cord *i* with the shaft *j* and the springs, for the purpose of ringing the bell *h*, to notify the attendant when the grain is nearly run out of the hopper, substantially as herein set forth.

No. 18,985.—FRANKLIN OLDS, of Providence, R. I.—*Improvement in Grinding Mills.*—Patent dated December 29, 1857.—L is the upper or stationary stone, which is secured within the upper part *a* of the curb. The stone L has an iron band *g* around its upper end, and projecting bars *h* are attached to said band. Through the projecting bars *h* screw rods *i* pass, the rods passing through the top plate of the curb A.

The lower stone K may be raised and lowered, so that the stone may grind finer or coarser, by merely turning the hand-wheel F; and as the step G is raised and lowered in a vertical line, the stone K will be raised and lowered in a vertical position.

The inventor says: I do not claim to be the first inventor of mills in which the upper stone was made adjustable. But, so far as I am aware, no grinding mill has ever been made in which the upper stone is held and adjusted in the manner described by me; nor has any mill been made which contained the several other features of novelty which I have set forth.

But I *claim* a grinding mill made substantially as set forth.

No. 16,987.—RICHARD F. MAYNARD, of Baltimore, Md.—*Improvement in Securing the Legs of Sectional Corn and Cob Mills.*—Patent dated April 7, 1857.—The two parts *a* and *b* of the concave are secured together by means of lugs *c* passing within the bevelled edges of the ears F on piece *b*. The projections *r* of the legs *d* bear against the lower edge of the concave *b*, where they are prevented from moving to one or the other side by the ears *h*; the upper end of the legs *d* bears against the ears F and lugs *c*.

Claim.—The mode set forth of securing the legs and the parts of the concave together.

No. 17,995.—MANASSEH GROVER, of Clyde, Ohio, assignor to Himself and HURLBUT SEELY, of Hudson, Mich.—*Improvement in Winnowing Mills.*—Patent dated August 11, 1857.—The object of this invention is to force the air from the centre of the fan wheel, thus prevent-

ing it from being carried around with the wheel, and to discharge the full volume of the blast which is created by the fan wings.

Claim.—Arranging in the throat or opening of the fan case a series of troughs or scoops *c*, in combination with the obtuse angles *e* of the fan blades, in the manner and for the purposes fully described.

No. 18,006.—ZACHARIAH ALLEN, of Providence, R. I.—*Improvement in Tubular Shafting for Mills, &c.*—Patent dated August 18, 1857.—The nature of this invention will be understood by reference to the claim and engravings.

Claim.—The improved hollow shafting described, forming a continuous line of mill shaft and pulley or belt drum, substantially as set forth.

No. 17,565.—GEORGE P. GORDON and FREDERICK O. DEGENER, of New York, N. Y.—*Improvement in Motion for Preserving Rolling Contact, &c.*—Patent dated June 16, 1857.—The nature of this invention will be understood by reference to the claim and engravings.

Claim.—Supporting or hanging a reciprocating bed or plate B upon supports C C, placed obliquely, or out of parallel with each other, substantially as described, so that the face of such bed or plate shall, as it is moved back and forth, work in contact with the periphery of a cylinder, or with a fixed point or line, or act intermittently against a swinging bed or plate, as set forth.

No. 17,222.—MATTHAUS KAEFER, of Alexandria, Pa.—*Improvement in Transmitting Motion.*—Patent dated May 5, 1857.—The fly wheel I receives its motion by means of pitman L of the motor; and as the fly wheel is rotated, it causes the carriage C to travel forth and back on its ways B by means of crank M and connecting rod N, which latter is pivoted at *c* to the standard O of the frame A; the travelling carriage C transmits a reciprocating motion to rod G.

Claim.—Hanging a loaded fly or balance wheel on a travelling carriage, so that said carriage shall yield to the momentum of the fly wheel as it passes the dead points, substantially in the manner set forth.

No. 18,496.—OLIVER I. BUTTS, of Georgetown, S. C.—*Improvements in Machines for Brushing Rice.*—Patent dated October 27, 1857.—The frame work of this machine is constructed of wood. The brush D is a cast-iron plate faced at the bottom side with wood, to which the wool and basils are attached by tacks; the wool, being first cut into segments, is tacked on one edge of the same upon the wooden facings of the runner and closely around its edge; the basils, being also cut into segments, are tacked in like manner upon wooden facings over the wool, which forms a soft cushion for brushing the rice. The stuffing box H is a cast-iron centre or spider, with four or more arms, the upper edge of which is faced with wood, the centre of the spider forming the stuffing box; the wire, being tacked to the upper edge of these arms, forms the wire bed G G.

Claim.—The application of a flat brush for brushing rice, consisting

of a flat runner dressed with sheep skins and basils in connexion with a wire bed, constructed and operating as described.

No. 18,374.—WILSON AGER, of Rohrsburg, Pa.—*Improved Machine for Cleaning Rice.*—Patent dated October 13, 1857.—The nature of this invention consists in constructing the reticulated concave in the form of a right frustum of cone, and of employing within it a rubber of the same form with the surface of its upper portion, a brush, and its lower portion having a sheepskin covering; the entire rubber having a vertical adjustment to compensate for the wear, the two portions being susceptible of a further relative adjustment to accommodate the unequal wear of the brush and sheep skin.

The inventor says: I am aware that reticulated concaves have been used, and make no claim for that portion of my machine; neither do I claim an independent adjustment of rubbers, such as is shown in the patent of Clark Jacobs, 1846; nor do I claim broadly the construction of the rubbers with brush and sheepskin surface.

But I *claim* the conical rubbers R R^1, having the separate adjustment described, in combination with a single reticulated casing, operating substantially as and for the purposes set forth.

No. 17,646.—JOHN F. TAYLOR, of Charleston, S. C.—*Improvement in Machines for Cleaning Rice.*—Patent dated June 23, 1857.—The rice to be cleaned is placed within the vessel A; and as the shaft C is rotated the rice below the screw C is forced downward, and the spiral projections *b* deflect the rice outward and force it upward at the sides of the vessel; and the rice will pass down through the cylinder G, and again underneath the screw, which causes it to move in a regular current, as indicated by the arrows.

The inventor says: I do not claim separately the screw F, for that has been previously used.

Neither do I claim the peculiar form of the vessel A, for both have been previously used for the same or analogous purposes.

I *claim* the screw F and cylinder G placed on the rotating shaft C, in combination with the spiral projections or ledges *b*, formed on the plate E, and placed at the bottom of the vessel A; the whole being arranged so as to operate conjointly as and for the purpose set forth.

No. 17,882.—PHILIP R. LACHICOTTE and T. B. BOWMAN, of Charleston, S. C.—*Improvement in Machines for Cleaning Rice.*—Patent dated July 28, 1857.—The rice is placed in the upper part of the cylinder A, and the cylinder F^1 is rotated in any proper manner, and the rice is pressed down by the action of the flange *f g*, and underneath the lower edge of cylinder F^1, and upward through the centre of said cylinder, and over its upper edge, to be forced down again by the flanches; the process being continued until the flour is completely detached from the grain by the friction produced by one kernel rubbing against the other.

The inventors say: We do not claim separately the employment or use of a screw for the purpose specified.

Neither do we claim a cylinder in connexion with the screw, irrespective of its arrangement and its connexion with the parts specified.

But we *claim* the rotating and adjustable cylinder F^1 provided with the screw or spiral flanches *f g*, and placed within the cylindrical case A, in combination with the stationary wings E E attached to the bar D on the bed B, the wings being within the cylinder F, and the whole arranged substantially as and for the purpose set forth.

No. 18,177.—WILSON AGER, of Rohrsburg, Pa.—*Improvement in Machines for Cleaning Rice.*—Patent dated September 15, 1857.—For the description of the operation of this machine see No. 18,176.

Claim.—The method of cleansing rice by submitting the mixture of grain and husk resulting from the hulling process to an alternate packing and loosening action produced by surfaces dressed and operating substantially as set forth.

No. 18,176.—WILSON AGER, of Rohrsburg, Pa.—*Improvement in Machines for Hulling Rice.*—Patent dated September 15, 1857.—The rice is fed in by hopper *i*, and shell S and burr B are rotated in opposite directions. On passing through the openings i^1 of the shell, the rice is conveyed by flanch *l* to the space between the hulling portion of the shell and the burr. The grain on entering this space will be turned by the deflecting blocks *m*, which will turn it across the axis of the burr, and in so doing cause one end of the grain to enter a cavity *n* in the shell as the other is caught by a similar cavity in the burr, as represented in figure 4. The rotation of the shell and burr causes a pressure in the direction of the length of the grain, effecting a separation of the husk. The grain and husk then pass onward to the spiral flange *o*, which conveys them to the cleaner; there the rice and husk pack together, as the shell and burr, represented in figure 3, rotate in opposite directions, the rough surfaces of the husk rubbing upon the grain and acting as a file to remove the coating during the transit of the mixture from z^2 to z^3; and the cleaned rice and husk are discharged through passage k^1.

Claim.—Removing the rice husk by the pressure in direction of the length of the grain, effected by the action of a shell and burr, dressed and operating substantially as set forth.

No. 18,099.—WILLIAM P. MAXSON and JACOB E. B. MAXSON, of Albion, Wis.—*Improvement in Sack Fastener.*—Patent dated September 1, 1857.—The nature of this invention will be understood by reference to the claim and engravings.

Claim.—A bag or sack fastener, consisting of a spring tongue F pressing the string against a side flange or projection *c*, so as to form a self-holding nipper clutch, when the said sash fastener is made of a single piece of metal, cut and bent in the manner substantially as described.

No. 18,419.—JAMES A. WATROUS, of Green Spring, O.—*Improvement in String Fastening for Sacks, &c.*—Patent dated October 13, 1857.—This machine consists of two parallel plates, which support

the inside work, and are made any shape and of any metal or other strong material, each plate having a lip projecting from one edge, turned at right angles with it, through which is made a hole for fastening the machine to the bag.

There are in each plate three holes to receive the rivets projecting from the fixed jaw A, and by which it is made fast to the same; there is also in each plate a slot *d* to receive the projecting guards of the movable jaw B, and lever C D is a side plate, with the holes *c* for the rivets *b b* of the fixed jaw, and also for the slot *d*. Figure 2 represents the fixed jaw consisting of the curved plate T T and leg A.

The inventor says: I *claim* the means of crimping or fastening the string or cord by means of the fixed and movable jaws with their elevated compressors, the movable jaw rising and falling in the slots in obedience to the lever, thereby fastening the string firmly at any point desired without chafing or cutting the same, when applied to the fastening of bags.

No. 17,236.—WILLIAM SELLERS and COLEMAN SELLERS, of Philadelphia, Pa.—*Improvement in Coupling for Shafting.*—Patent dated May 5, 1857.—To loosen this coupling the nuts *k* have to be unscrewed and a wedge driven through the hole I, thereby forcing the sleeves F apart and relaxing them from the shafts.

The inventors say: We do not claim the use of a conical sleeve within an external sleeve to hold to a shaft.

But we *claim* the use of two conical sleeves within one external sleeve, when they are so arranged as to compress the ends of the coupled shafts separately, whether the shafts be of the same or different diameters, substantially as described.

Also bolting said conical sleeves together, as described, or in any other mode substantially the same, whereby the bolts may serve as keys to prevent the internal cones from turning in the external sleeve.

No. 17,716.—GEORGE H. REYNOLDS, of Bedford, Mass., assignor to Himself and D. B. HINCKLEY, of Bangor, Me.—*Improvement in Strap Pillow Block for Shafting, &c.*—Patent dated June 30, 1857.—The nature of this invention will be understood by reference to the claim and engravings.

The inventor says: I do not claim dividing journal boxes vertically, as this has been done before.

But I *claim* the described journal box, consisting essentially of the pieces of bushings B B^1 and strap D, constructed and operated in the manner and for the purpose set forth.

No. 17,596.—JAMES TOMPKINS, of Liberty, Pa.—*Improvement in Smut Machines.*—Patent dated June 16, 1857.—The grain is introduced through hopper P into cylinder F, where it is subjected to the action of the beaters I, and passes then into cylinder B, where it is subjected to a second beating by the increased speed of the beaters G, and from which cylinder it is discharged through passage Z.

Claim.—Constructing machines for cleansing grain of two cylinders, one placed within the other, and of two sets of beaters secured to one

shaft passing through these cylinders; the whole so arranged that grain being cleansed may be subjected to two separate and distinct agitations in the one machine, substantially in the manner described.

No. 16,897.—WILLIAM ZIMMERMAN.—*Improvement in Smut Machines.*—Patent dated March 24, 1857.—The nature of this invention consists in a series of stationary and revolving cylinders arranged on disks from their centre outwards, and roughened on both sides so as to scour and clean the grain as it passes through them successively. The engraving and claim further show the nature of this invention.

The inventor says: I do not claim such devices as are represented and described in the patent granted to Howlett & Walker, May 9, 1846.

But I *claim* a series of stationary and revolving cylinders arranged on disks, or their equivalents, from their centre outwards, substantially as described, for the purposes set forth.

I wish it distinctly understood that I disclaim the devices covered by the patent granted to R. M. Dempsey, December 18, 1849.

No. 16,980.—ISRAEL KEPLER, of Milton, Pa.—*Improvement in Smut Machines.*—Patent dated April 7, 1857.—The grain passes into the machine through the aperture E, and drops on the disk H; motion being imparted to shaft F, the pins *a* tend to break the smut balls, and prevent the grain from being thrown too violently against the ribs D of the cylinder. The current created by fans I drives the smut and dust through between the ribs D, while the grain drops through funnels J and K, and passes out at M.

The inventor says: I do not claim vertical ribs or openings of any kind.

Nor do I claim horizontal ribs or wires, nor the openings between the wires; as neither of these effects the object I have in view.

But I *claim* the construction of the stave, the horizontal ribs, and openings, when said ribs are cut away on their inner faces, so as to facilitate and concentrate the blast of air that is to pass through them, to carry off the smut and other impurities, in the manner as set forth.

No. 17,869.—EVERARD M. CLARK, of Lancaster, Pa.—*Improvement in Smut Machines.*—Patent dated July 28, 1857.—By the operation of this machine, the fan K and the fluted propeller F in the cylinder E are made to drive off all the chaff, smut, &c., while the scouring process is going on, and the grain is falling in through the spout B and being discharged in a thoroughly cleaned state below at the spout L; while all the chaff, smut, &c., are blown out of apertures D and J of the spouts D and I, at one side of the machine.

The inventor says: I am aware of wings being attached to a vertical shaft operating in a grooved concave or cylinder for scouring purposes; but this I do not claim.

I *claim* the shape or construction of the fluted propeller F, as described, for the purposes of scouring the grain, and at the same time driving a blast upwards so as to blow off the cheat, smut, &c., out of the spout B above, before the grain passes down on to the wings of the propeller F and concave E.

No. 18,484.—JOHN A. WOODWARD, of Burlington, Iowa.—*Improvement in Smut Machines.*—Patent dated October 20, 1857.—This invention consists in the use of a scouring device peculiarly constructed and placed relatively with blast passages, whereby the grain may be thoroughly scoured and deprived of dust, smut, and other foreign substances.

Also in the employment of a series of adjustable screens, so arranged in the principal blast spout, and placed relatively with the fan, that the escape of the offal, imperfect grain, &c., may be regulated as desired, and when of value discharged from the machine separately and free from dust, or when worthless allowed to pass into the fan-box and be discharged therefrom with the dust and other impurities.

The inventor says: I do not claim the curved spout H, nor do I claim broadly and separately subjecting the grain to two or more separate blasts while passing through the machine; for this has been previously done, and curved blast-spouts have been previously used. Neither do I claim separately any of the parts described and forming a part of the scouring device.

But I *claim* the scouring device formed of the beater *a* attached to the cylindrical screen *c*, in combination with the scouring plate D and cylinder E, formed of a series of rings *a x* placed one over the other, with spaces between them; when the device thus constructed is placed relatively with the blast-passage J I substantially as described, whereby the grain is thoroughly scoured and subjected to three blasts, and thoroughly separated from the inferior grain and lighter foreign substances, such as chess and the like.

I further claim the adjustable screens *j*, placed in the chamber K, and arranged relatively with the fan-box B as shown, whereby the chess and lighter and inferior grain may, when of sufficient value, be discharged from the machine separately and in a clean state, or, when worthless, allowed to pass into the fan-box, to be ejected therefrom with the finer and lighter foreign substances.

No. 18,727.—JAMES M. BENCKERT, of Philadelphia, Pa.—*Improvement in Speed Indicator.*—Patent dated December 1, 1857.—To one of the arms D of each pair a toothed segment E is attached; and these segments gear into teeth *b*, formed on cylindrical cam F, which is placed loosely on the shaft A. The construction of the cam is shown in the engraving. It is simply a short tube, having the teeth *b* on one end, provided with two oblique terminations *c c*, the edges or face sides of which may be described as being curved, so as to form part of the threads of a screw, one being in a reverse position to the other. The two pairs of arms D are connected by spring D^1.

To the plate C two pins *d d* are attached. These pins are placed on opposite sides of the tube shaft A, and in a line with its centre; G is a swivel arm which has holes through it near each end, through which holes the pins *d d* pass.

The inventor says: I distinctly disclaim the employment of weighted arms assisted by springs in governors or speed indicators, for I am well aware that they are old.

But I *claim* the arrangement of the double-threaded cam F, segments E, and swivel arm G, as and for the purposes set forth.

XIV.—LUMBER.

No. 18,003.—ASA WEEKS, of South Boston, Mass., assignor to Himself and ORIN W. FISKE, of the same place.—*Improved Expanding Auger-Bit.*—Patent dated August 11, 1857.—The nature of this invention will be understood by reference to the claim and engraving.

The inventor says: I do not claim the invention of movable cutters; nor do I claim the employment of a double-threaded screw for adjusting the distance of a lip and cutter, as shown in the patent granted to J. P. Rollins, December 25, 1855.

But I *claim* combining with the double-threaded screw C, and arranging on the split tapering shank, as described, a rotary sleeve B and its screw, arranged as described.

No. 17,868.—WILLIAM N. CLARK, of Chester, Conn.—*Improved Auger-Handle Fastening.*—Patent dated July 28, 1857.—The nut C can be turned freely on the screw of the shank B, but is retained to the handle A by means of collar D for the purpose of preventing the parts from being lost.

Claim.—The attachment of the nut to the handle of the auger in the manner above described, for the purpose of preventing the parts from being lost, and to form a secure and convenient fastening, as set forth.

No. 16,399.—J. A. REYNOLDS, of Elmira, N. Y.—*Improved Tubular Auger.*—Patent dated January 13, 1857.—The article to be bored is clamped upon the sliding carriage D, actuated by a feed screw, the cutters *g* of the auger penetrating the wood, while the tube E, supported by slide *h*, serves to retain the auger in its position, and thus to insure a true bore.

The inventor says: I am aware that the employment of a tubular auger is not new, as one has been employed with the cutters attached to said tube. I am also aware that a tubular auger and screw therein, for the delivery of the chips cut by the tube, has been employed.

I *claim* the employment of an auger whose shank or stem shall form a screw, and whose head shall be constructed in the manner described, when combined with a guiding tube E surrounding the screw shank of the auger, but not covering the head thereof, substantially in the manner and for the purpose set forth.

The use of the guide tube E when combined with the sliding carriage D D, said carriage constructed with the slide *h*, as set forth.

No. 18,549.—JAMES H. MATTISON, of Scriba, N. Y.—*Improved Mode of Chamfering and Crozing Barrels.*—Patent dated November 3, 1857. The engravings and claim show the nature of this invention.

The inventor says: I *claim* the cams *n n*, in combination with the spring *p*, and the chamfering and crozing tools, so constructed as to traverse them out gradually to cut the score and chamfer a barrel, and

draw them in suddenly to remove the barrel, and save the time of the operator attending the machine.

I claim making the edges of the rims D and D[1] which hold the end of the barrel by making a rebate, or otherwise, so as to hold the barrel properly in the machine without removing the truss hoops, substantially as described.

No. 16,642 —JAMES E. A. GIBBS, of Mill Point, Va.—*Improved Carpenter's Bench Clamp.*—Patent dated February 17, 1857.

The inventor says: I do not confine myself to the particular devices I have described, as I *claim* combining the pivoted and bent clamp rod D with the sliding arm or lever *c*, when the latter is so arranged as to jam the rod at any required height by means of screw E or cam H, or any equivalent mechanical contrivance.

No. 18,345.—J. W. MAHAN, of Lexington, Ill.—*Improved Joiners' Bench.*—Patent dated October 6, 1857.—In describing this invention the patentee says: However, inasmuch as my improvement relates to or is upon a previously patented machine, and cannot be used but in connexion with said improvement, therefore I deem it necessary only to describe my present improvement. The other improvement was patented September 16, 1856. In the present improvement the jointing and facing bench are combined, so as to make but one bench, both for facing, thicknessing, and jointing timber, the operator working only on one side of the machine or bench. The second point of difference between this and the first improvement is, that a peculiarly constructed sash is used for the facing and jointing plane to work in. The facing and jointing this sash also gives the gauge in thicknessing. The third point of difference is a peculiarly constructed jaw, used for clamping and holding the lumber both in facing and jointing.

The inventor says: I would state that I do not claim as my invention, that is, as new, the entire carpenters' and cabinet-makers' assistant work-bench that is illustrated and described by my drawings and specifications; for part of it was patented by me March 25 and September 16, 1856.

But I *claim* the cabinet-makers' and carpenters' assistant work-bench, constructed in any manner substantially the same as shown by my specification and drawings.

No. 17,292.—CHARLES T. PEARSON, of Chelsea, Mass.—*Improved Joiners' Bench Strip.*—Patent dated May 12, 1857.—By pressing the upper ends of the pawls D inward, their lower ends will be thrown out from the rack teeth C, and the strip G may be raised or lowered, and secured at the desired point.

Claim.—Attaching the strip G to the slides C C, which are fitted in dove-tail grooves *a* in the bars B B, the slides C being provided with pawls D, against which springs F act, the whole being arranged substantially as shown for the purpose set forth.

No. 17,769.—HENRY W. PORTER, of Rothsville, Pa., assignor to SAMUEL G. PORTER, of West Earl, Pa.—*Improved Bit Brace.*—Patent

dated July 7, 1857.—When it is desired to use the auxiliary handle *g*, the detent *e* should be thrown on to the teeth of the ratchet wheel *c*, which will enable the bit to be rotated in a forward direction by applying power to shaft *g* and for reversing the motion of the bit; the detent must be moved on to the teeth of wheel *d*. When the bit is to be operated by means of main handle A, the detent should be placed in a central position upon the teeth of the ratchet wheels *c d*.

Claim.—Combining the knob *h* with the bit holder *j*, by means of the auxiliary handle *g*, whenever it may be necessary to bore holes in situations where it is impossible to rotate the bit brace, substantially as set forth.

And in connexion therewith the double ratchet wheels on the spindle *a*, when arranged in such manner in relation to the detent *e* as to enable the necessary connexions and disconnexions to be effected between the bit holder and the permanent and auxiliary handles of the brace, substantially as set forth.

No. 17,891.—Charles C. Plaisted, of Chicopee, Mass.—*Improved Bit Brace for Boring obliquely to the Stock.*—Patent dated July 28, 1857.—The socket part M of this bit stock can be set into an oblique position with the bit stock of the adjustable connecting link C, which connects the collar A with collar B. In boring, the handle F is held by the operator, thus preventing the collars from turning, and the operator is enabled to bore holes in places where there is not sufficient space to allow the common bit stock to be used.

Claim.—A bit stock, in which the socket or part that holds the bit revolves about its axis in an oblique position with reference to the stock by means of the universal joint R R^1, or its equivalent, and the adjustable connecting link, extending from the socket to the stock.

In combination with the above, I claim the cylinder H or coupling by which the axle of the bit and the stock are placed and retained in line with each other.

No. 17,038.—Alexander Hall, of New York, N. Y.—*Improved Expansive Bit.*—Patent dated April 14, 1857.—The nature of this invention will be understood by reference to the claim and engraving.

Claim.—In combination with a boring tool, an expanding bit or bits *e*, whose turned cutting edge *i* and shank passes through a mortise in the shank of said boring tool, and is secured therein by a pin *m*, as herein set forth, so that said expanding bit or bits may have a cutting edge from the centre of the boring tool to its extreme outer edge, as set forth.

No. 17,395.—Cyrus W. Saladee, of Columbus, Ohio.—*Improved Bit for Cutting out Cylindrical Plugs of Wood.*—Patent dated May 26, 1857.—The nature of this invention will be understood by reference to the claim and engravings.

Claim.—The projecting lips or cutters A A, as shown in figs. 1, 2, and 3, for the purpose of cutting out round plugs of wood in the manner substantially as set forth.

No 18,282.—BENJAMIN B. HILL, of Chicopee, Mass.—*Improved Bit Holder.*—Patent dated September 29, 1857 —This invention consists of a curved arm so constructed that it can be attached to the common bit stock, and at the same time give support and bearings to two bevel gears placed at an angle of about forty-five degrees with each other, and having near the lower gear a flat rest or bearer, by means of which the bit is held in a fixed position with reference to the action of rotation of the stock when in use. The whole arrangement being such that holes can be bored in the corner of a room (as in bell hanging) while the hand revolving with the bow of the stock is at some distance from the walls of the apartment.

The inventor says: I *claim* the diagonal bit-holder, having a projection or rest T which forms a guard to the bevel gears and gives support to the bit, as described.

No. 17,479.—GEORGE BENJAMIN, of Avoca, N. Y.—*Improved Devices for Holding Bit in the Brace.*—Patent dated June 9, 1857.—The nature of this invention will be understood by reference to the claim and engravings.

Claim.—The invention of the hook and lever 3 and standard 4, as shown in the drawings, as applied to the brace socket; and the application of the spring 6, burr 7, and notch 8, on the outside of the brace socket as represented and described.

No. 17,770.—AMOS J. SMITH, of Lynn, Mass., assignor to Himself and GEORGE W. OTIS, of the same place.—*Improved Bit or Drill-Holder.*—Patent dated July 7, 1857.—By drawing backward thimble D until the inner end of key C comes up against the projections 2, the bit G can be inserted into the socket 3; and by then releasing thimble D, the spring E will drive key C forward over the shank end of the bit.

Claim.—The described combination of the sliding key or bar C and thimble D, with the spring E and stationary catch or protection F, constructed and operated substantially as described.

No. 16,938.—ABEL W. STREETER, of Shelburne Falls, Mass.—*Improved Method of Constructing Bit Stocks.*—Patent dated March 31, 1857.—The tube G is fitted on the journal J, and plays freely on it, and is secured thereto by means of a screw nut H; the stock cap B is fastened to tube G by means of a pin or screw D, which does not touch journal J, and thus the stock cap B can turn freely on the stock.

Claim.—The construction of a bit stock in sections, said sections being connected by joints in the manner and for the purposes substantially as set forth.

Also the mode of attaching the stock cap to the stock by means of the box or tube G and cross pin D, or its equivalent, substantially as described.

No. 16,931.—A. C. MOORE, of Wilmington, Vt.—*Improved Mode of Securing Bits in their Stocks.*—Patent dated March 31, 1857.—The

nature of this invention will be understood by reference to the claim and engraving.

Claim.—The application to bit stocks of a plain socket with a screw cap to hold the bit in place by a pressure upon the shoulder of the bit head; thereby doing away with the necessity of fitting a bit before use, and gaining the advantage of a sure and firm fastening.

No. 17,341.—LUTHER T. SMART, of Manchester, N. H.—*Improved Machine for Compressing the ends of Blind Slats.*—Patent dated May 19, 1857.—The blind slats are piled between the racks *k*, and by turning crank *e* shaft *c* is rotated, and cam *m* strikes arm *x* of slide *l*, carrying with it slide l^1 forward and across the bed piece *a*, pushing the lower slat of the pile under studs *n* and opposite the dies in the die-blocks *f*. When the slat *r*, fig. 3, is firmly pressed down by *n*, the cams *j*, by their inner sides playing against the friction rolls *o*, force the dies *f* towards each other, which thus pinch the ends of the slat.

Claim.—The machine substantially as set forth, or its equivalent, for crimping shades to blinds, consisting essentially of the sliding dies *f f* in combination with the cams *j j* and *m*, the rods *p p*, the slide l^1, and the pressure studs *n n*, with the rack *k k*, connected together and operating in the manner substantially as set forth.

No. 16,777.—TRISTRAM D. KNIGHT, of Charleston, Tenn.—*Improved Machine for Reducing and Smoothing Boards to a Uniform Thickness.*—Patent dated March 3, 1857.—C D and M N are feed rollers, G the saw that reduces the board J to a uniform thickness, and P the grinding cylinder which serves to produce an even and polished surface.

The inventor says: I do not restrict myself to the cylindrical form of the grinder, as the disk or some other form might, under certain circumstances, be substituted with advantage. Neither do I confine myself to the use of an emery grinding surface, as many other things are well known for abrading and polishing wood, which might be employed in the place of emery, and, as an example, I will mention rasps and files; but the variety of such things is too well known to require special enumeration, and too numerous to be particularized in a specification.

I *claim* the combination of the reducing saw with the finishing grinder, for the purpose described.

No. 17,017.—JONAS BOSENBURY, of Cherryville, N. J.—*Improved Boring Machine.*—Patent dated April 14, 1857.—The object to be bored is clamped between the dogs H and F. The dog H are adjustable by means of the set screws S; and the dog F, which is attached to rack C, can be adjusted by turning spiral cam D by means of crank E. The auger shaft *n*, which turns in a frame *d b*, can be adjusted in a lateral direction by means of slide *g*, which can be moved on frame *d* by means of a tongue and groove-joint, while it can be adjusted in a vertical direction by frame *b d*, sliding on frame *c*. The uprights I can be adjusted laterally by turning crank L.

Claim.—The arrangement of devices as described, for the purposes set forth.

No. 18,057.—EMMETT QUINN, of Trenton, N. J.—*Improved Boring Machine.*—Patent dated August 25, 1857.—The log to be bored is secured to the carriage C and fed to the hollow boring tube B by its own weight. When the carriage C arrives in line with the levers F, it presses on said levers and turns them to the position represented in fig. 2, whereby the slides *a* are withdrawn to permit the passage of the carriage C.

Claim.—The combination of the sliding guide *a a* with the levers *f f* and timber carriage C, operating as and for the purpose set forth.

No. 18,872.—LAFAYETTE STEVENS, of Elmira, N. Y., assignor to W. L. GIBSON, of same place.—*Improved Boring Machine.*—Patent dated December 15, 1857.—The claim and engravings explain the nature of this invention.

The inventor says: I do not claim an inclosing tube attached to the frame of a boring machine, and extending the entire length of the auger.

But I *claim* the loose independent collar *f*, provided with knife edges *g g*, to keep it from turning, for the purpose of furnishing a bearing for the head of the auger while in operation.

I also claim the sharp annular spur *c* for the purpose of centreing and guiding the auger, and at the same time leaving a core of the material bored in the centre of the auger, in the manner specified.

I also claim the oblique traversing rests *o o*, in combination with the screws *t t* and dogs Q; for the purpose of adjusting the timber to the auger, as described, and holding it firmly while under the operation of the auger.

No. 17,630.—LEVI B. LLOYD, of Warwick township, Pa.—*Improved Device for Feeding and Limiting the Depth of Hole in Boring Machines.*—Patent dated June 23, 1857.—The block X to be bored is placed upon the table T; the nut *n* is then turned on the thread of the draw rod *c*, forcing the spring *d* towards the edges of the table a distance equal to the required depth of perforation; the bit B is then turned, and the rising of the spring *d* keeps the block X constantly within the action of the bit until the spring ceases to exert any power.

Claim.—The combination of spring, draw rod, and table, arranged and operating to limit the depth of hole as described.

No. 17,799.—HIRAM E. PAINE, of Troy, N. Y.—*Improved Device for Feeding the Cutter Intermittently in Mortise Boring Machines.*—Patent dated July 14, 1857.—Rotary motion being given to the shaft *c*, the shaft J of the mortising tool is rotated by means of pulleys c^1 c^2 c^3 K and belt D. Rotary motion is also given to the cone pulleys *c* and *d* by means of belt E, and to the crank shaft C by means of pinion and wheel C^1 and C^2, the crank *a* causing the frame H and shaft J to vibrate within the ways *a* and a^1; the length of the stroke *a*, being made adjustable, is equal to the length of the mortise to be made. At the end of each stroke one of the arms j j^1 operates the lever *e* to turn it from the dotted position to that shown in full, thereby causing the rod 2 and pawl O^1, fig. 4, to operate ratchet n^2, pinion n^1, and rack *n*, *and to feed the mortising* tool to the stuff by operating frame N

within its ways M; thus the feeding of the mortising tool is only performed at the ends of the mortise. The shaft J is made to slide within the tube K by means of tongue and groove connexion, and consequently turns with said tube, preventing any vibrations of the tool as it is fed to the stuff.

Claim:—Constructing the machine as described, so that the revolving sidewise reciprocating mortising bit thereof is moved by the machine alone endwise into the timber at, and only at, the ends of the mortise, whatever length of mortise is being cut, as set forth.

I also claim the described means used to prevent increased trembling of the mortising or boring bit, as the depth of the cutting increases.

No. 18,370.—LAFAYETTE STEVENS, of Elmira, N. Y., assignor to WILLIAM L. GIBSON, of same place.—*Improvement in Wood-Boring Machines.*—Patent dated October 6, 1857.—This invention consists of an improved method of clearing chips from the auger in boring pump tubing, and is applicable to all cases where long boring in timber is required.

In using this invention, the centre of the wood is not removed, but passes through the annular spur *b* as the boring proceeds, and thence through the centre of the tube E, as shown at *c*, fig. 2, which is a longitudinal section of the auger and timber in the operation of boring. G, in fig. 1, is a fan blower, *d d* being the fans, which are attached to the shaft of pulley *e*, which is driven at a high rate of speed by a band from the large wheel H. The blast of the fans passes through the throat *f* into the pipe *g*, which connects with the hollow shaft C; from whence it is driven through the hollow of the boring tube E, emerging through the small aperture *h h* immediately back of the cutter F. The arrows in the drawing show the course of the blast.

The inventor says: I *claim* employing the elastic force of air when introduced as a blast through one or more tubes or jets, immediately at or closely following the bit or cutters as described, or by any analogous means of application having substantially the same effect, for the purpose of removing the chips and dust.

No. 17,001.—HORACE S. SMITH, ELIJAH HANSON, and M. S. RICHARDSON, of Rutland, Vt.—*Improved Machine for Manufacturing Cylindrical Boxes.*—Patent dated April 7, 1857.—The bolt or plank L is placed between the rollers I and J, and its inner end is placed against the cutters *h* and *j*. Motion being given to the driving shaft E, the spindle D rotates, and the head C is pressed towards the bolt I. The cutters *h* cut the exterior surfaces, and the cutters *j* the interior of the boxes, while the cutters *k* form the rim at the end of the box to receive the lever. When the cords of the boxes *f* come in contact with the end of bolt L, the boxes are finished, the head C is moved out from bolt L, and the bar Q is drawn by hand towards the attendant, causing the saw R to cut off the finished boxes from the bolt.

The inventors say: We are aware that boxes have been formed by cutters arranged in various ways; but we are not aware that cutters have been so arranged as to cut the external and internal surfaces of

boxes and also the rim to receive the cover at the same time. We therefore do not claim the employment or use of rotating cutters for cutting boxes irrespective of the arrangement shown.

We *claim* the cutters *h* attached to or formed on the semi-cylindrical shell *g*, the cutters *j* attached to the ends of the solid semi-cylindrical projection *i*, and the cutter K attached to the inner end of the semi-cylindrical projection I, the whole being arranged as described for the purpose set forth.

We further claim in combination with the cutters *h i* K, arranged as shown, the saw R attached to the swinging bar *g*, as described.

No. 18,287.—JOSIAH KIRBY, of Cincinnati, Ohio.—*Improved Machine for Cutting Bungs.*—Patent dated September 29, 1857.—A is the follower, which presses the block against the bits; B is the face-plate; C the mandrel; D the pulley on the mandrel; E the lever; F the lever shaft; H the lever that gives motion to the follower; I the lever that gives motion to T; J is the lever used to increase the weight at certain lines on E; K is a shoe on rod S, to increase its weight and receive the friction of pin; L is the shaft which gives the feed motion; M is the cam which gives motion to the lever; O is a weight on the lever; P is a cam; Q is a driving pulley on the shaft; N is a weight on lever E; B is a spring lock on lever H, to assist in bringing back the follower. The centre rod *b* serves as a slide to give motion to the bit holders. The bit holders *v v* are provided with adjusting rods *a a* at or near their front ends, and tail screws Y Y running through their rear ends. The rods *a a* and the tail screws Y Y extend through the sides of the mandrel and rest upon the bevels of the centre rod *b*, for the purpose of adjusting the bits to the required sized bung, and giving the holders *v v* an oscillating motion, so as to taper or bevel the bung as it is forced up against the bits, and to free the bits from the bung as it comes back again after it is cut.

The inventor *claims* the oscillating bit holders *v v*, when operated by means of opposite bevels on the centre rod *b* acting against and adjusting rods *a a* and the tail screws Y Y, in the manner and for the purpose described. The inventor also claims the mode of grasping the block and freeing the finished bung, when arranged and operating in the manner set forth.

No. 16,800.—EDWIN KILBURN, ARTEMAS KILBURN, and CHENEY KILBURN, of Burlington, Vt.—*Improved Machine for forming the Curved Surface of Solid Wooden Chair Seats.*—Patent dated March 10, 1857.

The inventors say: We do not claim a wheel having its periphery or face coated with sand or emery, for such wheels have been previously used for polishing.

But we *claim* shaping or hollowing out the faces or upper sides of chair seats by means of a grinding or cutting wheel D, when said wheel has a convex face or periphery coated with sand, emery, or other suitable substance; and using in conjunction with said wheel the screw *f*, or its equivalent, with the circular plate or disk *h* attached, substantially as described.

No. 18,161.—JOHN A. SCROGGS, of Burlington, Vt.—*Improved Mortising Chisel.*—Patent dated September 8, 1857.—The chips rise within the oblique clearing grooves between edges *a b*, they being centrally divided by the sharp edged tongue *c*.

Claim.—My improved self-clearing mortising chisel, whose peculiarity consists mainly in its oblique grooves, which operate substantially as set forth.

No. 18,838.—JUAN S. L. BABBS, of Boston, Mass., and AMOS H. RAY, of Providence, R. I.—*Improved Adjustable Gauge for Dovetails.*—Patent dated December 15, 1857.—A A is the bar, being a straight piece of wood having a series of cutter heads marked *c c*, with knives or markers attached to the top and bottom sides of the same. The cutter heads are made to slide easily upon the bar, and are held in their respective places by set screws *d d*, thereby admitting of adjustment for marking various sizes of dovetails as may be required.

B B are movable or sliding guages, and are also made to slide upon the bar in the same manner as the cutter heads, as before described. These gauges are provided with elongated slots, which allow them to traverse backward and forward upon the bar A A at right angles with the same, by which means this instrument may be used for marking the dovetails upon one piece of stock, and also the pins upon the other piece to match the dovetails, by employing one set of the knives or markers.

The inventors say: We *claim*, first, the use of the bar A A provided with two or more stationary or movable cutter heads, with knives or markers attached, as described for the purpose set forth.

We claim, second, the arrangement of the movable gauges B B, operating as described for the purpose specified.

No. 16,627.—ELBRIDGE G. MATTHEWS, of Clear Water, Minnesota Territory, assignor to HARVEY CHURCH, of Troy, N. Y.—*Improved Machine for Cutting Dovetails and their Grooves.*—Patent dated February 10, 1857.—The stuff R is placed against bar G, which may be set at various angles, so as to mitre and dovetail at the desired angles, and then fastened to the carriage B by means of slotted arc J and a set screw, not represented in the engravings. The stuff, when thus set at the proper angle, is secured by clamps I and H, and then the carriage is moved along by means of gear C D, and thus the stuff subjected to the action of the cutters *f e e*, which cut simultaneously the mitre and dovetail. Figures 2 and 3 represent the bits for cutting the tongue and mitre into piece S; and figures 5 and 6 represent the bits used for cutting the groove into piece R.

Claim.—In combination with the fixed stock Q, and mitring knife *f*, and scouring and cleaning knives *e e*, as set forth, for forming at one operation the mitre and dovetail tongue or groove.

Also in combination with the fixed stock and miteing and dovetailing cutters described, the traversing of the block or board in a clamped condition past the same, for the purpose of having the mitre and dovetail formed, as set forth.

No. 18,877.—RICHARD N. WATROUS, of Charlestown, O.—*Improved Drawing Knife.*—Patent dated December 15, 1857.—A represents the knife, provided at each end with a tong B, on each of which a shoulder *a* is formed, said shoulders being formed by having the outer ends or parts *b* of the tongs made of smaller diameter. The outer ends of the parts *b* of the tongs have each a screw cut on them to receive a thumb nut *c*. D D are the handles of the draw knife. The eyes or loops E are secured to the handles D D by tongs *c*, which pass entirely through the handles, and are riveted or headed at their outer ends.

The inner edge of each eye or loop E is serrated or notched about half the distance of its circumference, the lower or inner half as shown at *d;* and on each tong a point or stop *e* is formed. These points or stops are formed on the inner edges of the tongs, and are produced by filing, so as to form a projection. In consequence of these stops *e* catching into the notches in the eyes or loops E, the handles are prevented from turning on the parts *b* of the tongs; and by unscrewing the nuts *c*, the handles and blade may be adjusted relatively to each other as desired.

Claim.—Attaching the handles to the knife substantially as shown and described, or in any equivalent way, whereby the relative position of the blade and handles may be varied as occasion may require, or the nature of the work may demand.

No. 18,305.—WILLIAM D. SLOAN, of New York, N. Y.—*Improved Drilling and Milling Machine.*—Patent dated September 29, 1857.—The object of this invention is to mill or drill the two ends of blocks of various materials, such as umbrella tips, chair rounds, &c., with the view to expedite such operations and produce accurate work.

This invention will be understood by reference to the drawings and claim.

The inventor says: I *claim* the mode of operation, substantially as described, for securing and holding the blocks to the periphery of the wheel, by which they are shifted from place to place which mode of operation results from the combination of the radially sliding stirrups, or their equivalents, with the wheel and the mechanism operating the said stirrups to liberate and gripe the blocks, or any equivalent therefor, substantially as described.

I also claim connecting the stirrups, or any equivalent therefor, with the radially sliding rods by a yielding joint, in combination with the oblique edges of the recesses in which they slide, or any equivalent therefor, as set forth; so that the said stirrups when forced out shall be brought in a radial position, and be free to yield laterally to any irregularity of form of the blocks to be griped when drawn in, as set forth.

I also claim, in combination with the carrying wheel, or equivalents therefor, for holding and shifting the blocks, the two sets of hollow mandrels, with appropriate cutters, and having a reciprocating motion in opposite directions for acting on the opposite ends of the blocks, substantially as and for the purpose specified.

No. 16,936.—WILLIAM D. SLOAN, of New York, N. Y.—*Improved Automatic Lathe for Turning Irregular Forms.*—Patent dated March 31, 1857.—The blocks to be turned are fixed upon the mandrels *e*, which are shifted in succession from one to another of a series of revolving cutters d^4 e^4 f^4, which are guided in their longitudinal movements by patterns which act upon the revolving cutters by means of rollers z^1. Each of the three cutters is at a greater distance from the shaft *a* than the other, so that each subsequent cutter takes a deeper cut from the block, until the latter has acquired the desired shape. The finishing cutter referred to in the second claim is of a circular shape and represented in the drawings at n^2.

Claim.—The series of rotating and shifting mandrels for rotating the blocks to be turned, and shifting them from one operation to another, substantially as described, in combination with the series of traversing cutters, guided by patterns or moulds, to determine the form to be produced, substantially as described; whereby a series of blocks are simultaneously subjected to the series of operations, and each in succession subjected to all the operations, as set forth.

Also the mode of operation, substantially as described, of the cutter, termed the finishing cutter, which said mo le of operation consists in rolling the cutting edge along the surface of the block that is being turned as described; by reason of which a small portion only of the cutting edge is cutting at any one time, and immediately relieved and followed by another portion of the said cutting edge, as set forth.

Also the sliding segment ring with its slots, substantially as described, in combination with the cutters and their appendages, substantially as described, for carrying the rangling cutters nearer to the axis of the blocks at each successive cutting action as set forth.

No. 17,403.—ALBERT WILLIAMS, of Philadelphia, Pa.—*Improved Compound Gauge.*—Patent dated May 26, 1857.—The points A are the mortise points for marking wood for mortising, which can be adjusted by turning screw head I, the screw of which works in a screw nut J. The point E serves for marking metal; F is the common gauge point for marking wood; and G represents a cutter for cutting wood, leather, or any soft material.

Claim.—The combination of the four several gauges in one tool, and all operating on the same end of the stem; the mortise working with an anti-friction screw, the head of which is at the bottom or end of the stem.

No. 16,816.—CARVER WASHBURN, of Bridgewater, Mass.—*Improved Method of Operating the Splitting-Knife in Hoop-Pole Machines.*—Patent dated March 10, 1857.—The knife A is attached to a carriage sliding between the ways C C. The spring D serves to press the knife forward in the bite of the rollers and to allow the knife to recede from the rollers under the pressure exerted against the knife by the action of the rollers against a hoop-pole, while being forced forwards between them.

Claim.—The improvement of applying a knife to the feed rollers, or the latter to the former, by means substantially as described, so

that one may be made to approach towards and recede from the other, essentially in manner and for the purpose as specified.

No. 17,014.—JOSEPH SAWYER and SYLVESTER SAWYER, of Fitchburg, Mass., assignors to the AMERICAN HOOP MACHINE COMPANY.—*Improved Machine for Splitting Hoop-Poles.*—Patent dated April 7, 1857.—This invention consists in so connecting the splitting knife I with the last pair of feed rollers E F, that in proportion as the latter are forced apart by the increasing size of the pole the knife shall be drawn back to afford a greater space for the passage of the two halves of the pole. By means of arm M attached to the knife carriage K and pivoted to the centre of the shaft of the movable feed roll E, the knife I is moved laterally an amount equal to half the distance moved by the feed roll, and the knife at the same time is drawn back as the pin *h* of the block L is moved in the oblique slot *n*.

Claim.—First. Moving the knife back from the rolls, in proportion as the latter are separated from each other, in the manner and for the purpose substantially as set forth.

Second. Connecting the knife with the centre of the shaft of the movable feed roll, by means of the arm M, as set forth, for the purpose specified.

Third. The friction rolls *q* in the knife stock, operating in the manner described for the purpose specified.

No. 17,500.—LOVITT EAMES, of Kalamazoo, Mich.—*Improved Machine for Preparing Hub-Blocks for the Lathe.*—Patent dated June 9, 1857.—The blocks *m* represented in dotted lines are clamped between the top of the auger H and the disk *d*, by screwing down screw E. Rotary motion is then given to the arbor F, and as the block *m* rotates the cutter *h h* bore the mandrel hole, and the chips pass down through the hollow auger H; the block *m* being fed to the auger by the gravity of frame D, or by power applied to shaft D. As the tube is being bored, the cutters *j* rough off the block; the upper end of the plate I serving as support for the block to rest upon.

Claim.—The vertical and stationary hollow auger H, guide and rest plate I, with cutters J attached, in combination with the rotating arbor F, and screw clamp E attached to the sliding frame D, the whole being arranged substantially as shown, for the purpose set forth.

No. 16,402.—JOHN SHAERER, of Reading, Pa.—*Improved Hub-Borer.*—Patent dated January 13, 1857.—The collar *f* is secured to the cutter shaft D, at such a point as will bring it upon its seat *m* at the termination of the desired depth of the cut. Crank *k* is then turned, moving the clamps F, so as to embrace the hub. The turning of shaft D by lever L produces a progressive cut, until collar *f* reaches its seat *m*, when the rotation of shaft D causes the nut *a* to rise until it is released from its stop *c*; the cutter making a square shoulder after the progressive motion of shaft D has ceased.

Claim.—The vertically movable nut *a*, in combination with the cutter shaft D, constructed, arranged, and operating substantially as and for the purposes set forth.

No. 18,808.—ZINA DOOLITTLE, of Perry, Geo.—*Improved Machines for Boring Hubs.*—Patent dated December 8, 1857.—The claim and engravings explain the nature of this invention.

The inventor says: I do not claim the use of a shaft or a knife set in the shaft; neither do I claim the yokes F F, or feed spring H.

But I *claim* the employment of a hollow shaft, the rod C, and the projection *a*, with the nut E, for the purpose of expanding the cutter B, when the whole is arranged as shown, substantially for the purpose specified.

No. 18,612.—JOHN THRASHER, of Avon, N. Y.—*Improved Clamp for Centring Hubs for Boring.*—Patent dated November 10, 1857.—The nature of this invention consists in three or more vibrating arms connected by links to a screw, which operates them, so as to centre and hold the hub while it is being bored; and in an apparatus to clamp the wheel after it is centred, and hold it while the hub is being bored.

Claim.—The combination of the vibrating arms I I, links J J, and screw L, constructed and arranged substantially as described, for the purpose of centring and holding the hub while it is being reamed or bored and reamed.

No. 16,932.—ALBERT MOORE, of Honeyoye Falls, N. Y —*Improved Method of Centring and Holding Hubs while being Bored.*—Patent dated March 31, 1857.—The centring of the hub is performed by means of a chuck R, fig. 1. This chuck is composed of a ring R, which can be turned on the four guiding rolls *a*. The arms *d* are pivoted at *p* to the ring R, and the stationary pins *c* which are attached to the frame of the machine pass through corresponding slots in said pieces. By turning handle H on pivot *p*, the arms *c* are moved all simultaneously from the centre; and by now inserting the hub of the wheel, the arms *c* can be forced against it, holding it firmly in a central position. Fig. 2 represents the hub W of a wheel, centred in the chuck on a frame E, which latter is then turned in a vertical position by means of hinges *h*, and the hub is then ready for boring.

Claim.—First. The construction of the chuck, consisting of the combination of the ring R and arms *d d d*, said arms moving as described upon the fixed and movable points P P P and *c c c*.

Second. The arrangement of the frames E and F, in the manner and for the purpose substantially as described.

No. 17,735.—STEPHEN GOING, of New York, N. Y.—*Improved Device for Securing the Stock to the Guide-Rods of Joiners' Ploughs.*—Patent dated July 7, 1857.—By means of this improvement the iron F in the stock C may be adjusted with great facility, and also at parallel lines at any point of the guide-rods B.

Claim.—Securing the stock C on the guide rods B B by means of the bar D, fitted within the stock and actuated by the screw E, substantially as and for the purpose set forth.

No. 16,557.—JAMES STIMPSON, of Baldwinsville, Mass.—*Improved Method of Joining Boxes, &c.*—Patent dated February 3, 1857.

Claim.—The joining of boxes, drawers, furniture, &c., by means of rounds, tenons, and mortises, and a half-lap or secret joint, as set forth and explained.

No. 16,493.—JOSEPH B. OKEY, of Indianapolis, Ind.—*Improved Lath Machine.*—Patent dated January 27, 1857.—The shaft J being rotated, the cams K thereon rotate within the stirrup G; whereby the knives H, being rigidly attached to said stirrup, are made to oscillate upon the axis B, thereby cutting the laths from the under side of the blanks in the series of cells D, alternately by the backward and forward motion of the knives. The laths, on being severed, fall beneath as the knife recedes from under the blanks; the latter dropping down upon the gauge at the same time, in readiness to be again cut upon the return of the knives.

Claim.—The arrangement of one or more series of cells D and their gauge stops E in the arcs of concentric circles, for the reception of the blanks; in combination with an oscillating knife or knives, mounted and operating in the manner substantially as and for the purpose specified.

No. 17,782.—ALEXANDER EDMONDS, of Mount Pulaski, Illinois.—*Improved Automatic Lathe.*—Patent dated July 14, 1857.—By withdrawing the slide S and nippers N, the piece to be turned can be inserted within the conical mouth of the rotating cutter A *a;* and the piece being pressed through, the round end is inserted between the jaws of the nippers E, which jaws are then closed by pulling the cords *b* by means of a treadle; and at the same time the frame F is drawn back, carrying with it the nippers and raising counter-weight Y. By releasing the cords *b*, the weight Y brings the sliding frame back to its former position.

Claim.—The combination of the rotating cutter A *a*, provided with a gauge V regulating the diameter of the rounds or cylinders, with the nippers N and E, for forming chair stuff.

Also the arrangement in the tenoning machine of the regulating screw V and cap I with the chamfer chisel C^1, for the purpose set forth.

No. 17,866.—SAMUEL N. BAKER, of New Haven, Conn.—*Improved Automatic Lathe for Turning Irregular Forms.*—Patent dated July 28, 1857.—The bevel wheels G H are kept out of gear with each other, while the cutters E E^1 E^2 E^3 are turning the part of the article which requires to be plain and of uniform size; but when the part is reached upon which the ornament or moulding is to be turned, they are placed in gear and the cutter plate C is rotated, and the cutters upon it are moved towards and from the centre, in accordance with the shape of the pattern dies, against which their heels come in contact.

The inventor says: I do not claim the use of cutters moved and adjusted by a pattern die or guide to give shape, form, and figure to

mouldings or other configurations upon articles to be turned in a lathe.

But I *claim*, 1st. The use of a series of cutters secured to a cutting head standing at right angles to the article being turned, the said cutters being operated by being revolved within the circular case B, as and for the purposes set forth.

2d. The use of a pattern-guide or die, or of a series of them, placed at right angles to the articles being turned within a circle, being struck from the centre of the lathe, and having a movement in the direction of the length of the lathe coincident with that of the cutter described, and against which the cutters in their revolution come in contact, as and for the purposes set forth.

3d. The use of a sliding cutting head, containing both the cutters, to perform the operation of turning, and the pattern dies or guides to control the movements of the cutters, as described and for the purposes set forth.

No. 17,762.—George W. Walton and Henry Edgarton, of Wilmington, Del.—*Improved Mode of Operating Radial Cutters in Lathes for Beaded Work.*—Patent dated July 7, 1857.—Motion being given to the driving shaft U, the bolt I is fed by rollers C D E F into the hollow shaft V. A reciprocating movement is given to the collar Z and the rods *i*, in consequence of the bent lever E^1 and pattern K. The sliding movement of the collar Z and rods *i*, as they move back and forth, actuates the cutter stocks X, in consequence of the pins *n*, which are attached to the rods *i*, working in the oblique slots g^1; the stocks X swinging on the rods *g*, and causing the cutters Y to cut the stick in a beaded form, which is determined by pattern K.

The inventors say: We are aware that cutters for cutting beaded work have been arranged so as to be operated automatically, and a patent was granted to A. H. Brown for a machine having an automatic cutter head. We therefore distinctly disclaim all parts in our machine which may be considered equivalent to those of the aforesaid and other machines, intending thereby to limit ourselves to the combination and arrangement of parts shown.

We *claim* the rotary pattern K, bent lever E^1, arms C^1 C^1, connected to the sliding collar A^1, in combination with the swinging or oscillating cutter stocks X X, arranged substantially as described for the purpose specified.

No. 18,268.—John Humphrey, of Keene, N. H., assignor to Amos E. Perry, Harrisville, N. H., and John Humphrey, aforesaid.—*Improvement in Lathes for the Manufacture of Clothes Pins, &c.*—Patent dated September 22, 1857.—These improvements are designed for lathes used in making articles of a small size. They consist principally of a device for feeding the billets or pieces to be turned to the spindles of a lathe.

The nature of this consists in having a notched or forked piece or pieces, of a suitable shape or size to hold the billets to be turned, the same being arranged so that it will be in a position sufficiently distant from and lateral to their axes to receive a billet whil

occupied by a preceding piece, and then to have a position to hold the billet, so that it may be centrally pierced and taken by the spindles; these positions may be alternately changed, either by a lateral motion of the feeder D to and from the spindles B B^2, or of the spindles to and from the feeder. The billets may be received from the mouth of a conductor or the hand of an attendant.

I *claim* the method of feeding the pieces to be turned to the spindles when their relative positions are changed, as shown; and in combination with the above, removing the finished pieces from the spindles; the whole being arranged and operated in the manner and for the purposes set forth.

No. 18,120.—ELEAZAR S. GARDNER, of Philadelphia, Pa., assignor to SMITH, GOULD, & Co., of the same place.—*Improved Sliding Rest for Lathes.*—Patent dated September 1, 1857.—The nature of this invention will be understood by reference to the claim and engravings.

Claim.—The revolving collar C, with its square eye G, when the same is employed in conjunction with the steady rest of a turning lathe, for which a patent was granted to Albin Warth on the 10th day of October, 1854, in the manner and for the purpose set forth.

No. 18,112.—GEORGE N. TROWBRIDGE, of Lowell, Mass.—*Improved Socket Coupling for Lathes.*—Patent dated September 1, 1857.—The pin F is put into shank D in such a position, that when the shank is making its last turn before coming to a bearing in the socket, it will press upon spring E more and more until it passes the end of the spring, when the latter will fly up and the end of it bear against the pin, so as to prevent the tool from turning in the socket in a reverse direction until the spring is pressed down by hand out of the way of the pin.

The inventor says: I do not claim a simple conical pin for fastening the shank of a tool in a conical socket; but I *claim* the combination of the spring E and pin F, with the conical shank and socket, with straight screw attached, for the purpose and substantially as described.

No. 17,313.—HARVEY BROWN, of New York, N. Y.—*Improved Arrangement of Devices for Dressing Pieces of Lumber.*—Patent dated May 19, 1857.—The block to be dressed is placed upon the sliding table *f*, and is held against the face of the frame E; the saw A cuts off a piece of the desired thickness, at the same time that said piece is planed by the cutters *b* of the planer B, while it is jointed by the cutters C^1, the shaft of which can be adjusted in the circular slot O to any desired position.

The inventor says: I do not claim the saws, planer, or jointers separately considered; as they are not new and may be substituted in my invention by other forms of saws, planers, and jointers.

I *claim* the movable frame E, or its equivalent, as supporting the planer B and the jointer C^1, which, by means of the set screws F F, connect it with frame D; by which arrangement pieces for barrel heading or other purposes can be sawed, planed, and jointed simultaneously

of any desired thickness or width within the compass of the machine, substantially in the manner and for the purposes set forth.

No. 17,494.—GEORGE L. CHAPIN, of Perrysburgh, N. Y.—*Improved Mitre-Box.*—Patent dated June 9, 1857.—The position of part G can be adjusted by turning it on the fulcrum H, when it can be retained stationary by means of set screw J. The position of parts C and sides F can be adjusted by set screw E; when the parts C and G are adjusted to the desired angle, the piece of wood to be sawed is inserted between the side-boards F; and by leaning the saw against the inclination K, the end of the piece is cut to the required mitre.

Claim.—The arrangement and combination of the obtuse angled part G with the tilting-box C F, both parts being adjustable relatively to each other and to the fixed supporting frame A, all substantially as described and for the purposes set forth.

No. 17,880.—J. M. JAY, of Canton, O.—*Improved Mortising and Boring Machine.*—Patent dated July 28, 1857.—The boring or mortising bit is inserted within the end of shaft D, and the stuff to be operated upon is placed against the adjustable rack E, which can be placed to any desired angle by turning shaft I^1, worm-wheel I, segment H, and rack E on pivot F^1; the rack E can also be turned on its hinges F, and adjusted by means of the brace-rod J^1 and adjustable slide-piece J. The table N and frame U can be raised or lowered by operating bevel wheels *c d* and screw-shafts *b*, the latter playing in the swivel nuts *a*.

Claim.—The arrangement of the rack E, adjustable brace J, segment H, slide-rack G, and slide-table N, and in combination with the parallel linked table N, screws *b*, swivel nuts *a*, and arms *f*, in the manner and for the purpose described.

No. 17,285.—GEORGE P. KETCHAM, of Bedford, Ind.—*Improved Mortising Chisel.*—Patent dated May 12, 1857.—This rectangular hollow chisel being driven into the wood, the chip thus formed is split by the divider D, into two pieces, which are forced up between the divider and the parallel sides. The chips, being retained in the chisel by the shoulders P, are torn loose from the wood when the chisel is withdrawn, and are discharged at the top of the chisel.

Claim.—The employment of the divider D and the shoulders P P in combination, substantially as set forth.

No. 17,878.—CHRISTIAN J. HEISTAND, of Papho, Pa.—*Improved Mortising Chisel.*—Patent dated July 28, 1857.—The nature of this invention will be understood by reference to the claim and engravings.

Claim.—The new article of manufacture described, consisting of a chisel with the handle placed at right angles with the cutting part, for the purposes set forth.

No. 16,332.—CHARLES GREEN, of Bethel, Ohio.—*Improved Mortising Machine.*—Patent dated January 6, 1857.—The stuff to be mortised is secured upon bed M by a clamp P, and the stuff and bed

are moved towards and from the revolving cutters J by operating lever O; power being applied to pulley C, a vibratory motion is communicated to beds F, and the cutters J will cut the mortises in the stuff on bed M. The length of the vibrations of the cutters is regulated by adjusting the arms H at the desired points in the slots in the beds F and in the arm E, and also by adjusting the slide *a* in the pulley C, whereby the mortises may be cut the requisite length.

The inventor says: I do not claim as new in mortising machines chisels or bits vibrating through the mortise and simultaneously revolving about their axes, the stroke being varied as desired; nor yet the manner in which the stuff is fed to the action of the bits, &c., as such are common to other machines. But I *claim* the combination, substantially as shown and described, of the frame or bar A with its slot *e*; the T-shaped bars or pieces E^1 with their slots *e*; slotted frames or beds F, pivoted in the rear to the bars E^1, and carrying the revolving chisel, arbors, or axles G; slotted and double arms and connecting rods H; and slotted driving arm E,—all arranged for operation together for the easy adjustment and simultaneous production, when desired, of different sized mortises in the one stick and at varying distances apart, as set forth.

No. 17,701.—Hezekiah B. Smith, of Lowell, Mass.—*Improved Mortising Machine.*—Patent dated June 30, 1857.—By adjusting the clamp *e* higher or lower on the lever *a*, the motion of the table B can be adjusted, when said table is fed to the mortising tool, by pressing on treadle H, the lever *a* being then turned on its fulcrum *h*, and the rod I operating the table. The pawl K serves to hold the table in its position, and can be released therefrom by pressing upon the short end of said pawl.

Claim.—1st. The adjustable compound treadle H, when used in combination with a mortising machine for the purpose and substantially as described.

2d. The pawl K, or its equivalent, in combination with the table B, to prevent the action of the chisel from jarring the foot; not intending by this to confine myself to the exact form represented, but adopting any other substantially the same.

No. 18,521.—Caleb B. Rogers, of Norwich, Conn.—*Improved Device for Reversing the Chisel in Mortising Machines.*—Patent dated October 27, 1857.—A sliding check-pin F passes through the spindle C, so as to project on one side a quarter of an inch; B is a vertical way or plane-guide, along which the check-pin passes freely while the spindle is forced up and down; J is a check-guide, whose face is set perpendicular to the plane of the former guide B, and acts against the end of the check-pin whenever that pin passes so low in its traverse as to reach it.

Claim.—The application of the sliding check-pin F, and the check-guide J, and the spiral reversing guide B, to the objects and for the purposes set forth.

No. 18,535.—D. M. CUMMINGS and P. C. CAMBRIDGE, Jr., of North Enfield, N. H.—*Improved Method of Reversing the Chisel in Mortising Machines.*—Patent dated November 3, 1857.—By this invention a varying and progressive stroke is given to the chisel mandrel or arbor, so that the length of the stroke may be gradually increased as the depth of the mortise increases, and the chisel is thus regularly fed to its work. There are also means employed for rotating the chisel mandrel automatically from the auger arbor.

The inventors say: We *claim* rotating the chisel mandrel D from the augur mandrel K, when desired, by means of the lever L, with pressure roller *m* attached, and spur *n*, in connexion with lever T, operated by the upright *f*, as described.

No. 18,977.—LEVI KITTINGER, of East Greeneville, Ohio.—*Improved Device for throwing into and out of Gear the Tool of Mortising Machines.*—Patent dated December 29, 1857.—The two parts *e f* of the nut R are operated by two oblique bars *h h*, which pass horizontally through recesses in the outer ends of the parts *e f*, and are secured thereon by vertical pins *i i*. The outer ends of the bars *h h* and *j* may be formed or cut from a solid plate. To the back side of the cross-tie plate C a catch S is attached. This catch is a simple bar K, pivoted at its centre to the cross-tie C, and provided with a thumb-piece *b*, a spring *m* bearing against the bar K, which spring has a tendency to keep the ends of the bar in the notches *n* in the bars *h h*, when said bars are shoved inwards, so as to press the two parts *e f* of the nut into the screw-rod P.

The inventor says: I am aware that a hollow chisel containing an auger has been previously used, and also connected to a sliding gate; and I am also aware that said parts have been placed in the adjustable frames; I therefore do not claim the above parts.

But I *claim* operating or adjusting the two parts *e f* by the nut R, by means of the oblique bars *h h*, connected with the parts *e f*, and used in connexion with the catch S, for the purpose specified.

No. 17,183.—MOSES MARSHALL, of Lowell, Mass., assignor to RICHARD BALL and CHARLES H. BALLARD, of Worcester, Mass.—*Improved Method of Reversing the Chisels of Mortising Machines.*—Patent dated April 28, 1857.—When this machine is in operation, the chisel F can be reversed by simply pressing down lever U, which, being attached to chain O, turns when pressed down pulley K, causing the projection *c* on pawl J to act against pin *e*, and to withdraw the bolt from collar *b*; pawl J then operates against the teeth of collar *b*, and turns it until the end of the bolt H drops into notch *a*, when the chisel T is reversed.

Claim.—The projection *c* on the pawl J, so constructed and arranged as to press back the bolt H, when moved in one direction, and release the collar G, so that it may be turned by the pawl J to reverse the chisel; and, also, that it (the projection *c*) will pass outside of the pin *e* when moved in the other direction, substantially as described for the purpose set forth.

Also the slotted lever Q, chain O, and lever U, or their equivalent,

so constructed and arranged as to turn the collar K and reverse the chisel, as described.

No. 17,141.—D. T. DRAKE, of Leominster, Mass.—*Improved Machine for Mortising the Stiles for Blind Slats.*—Patent dated April 28, 1857.—The side rails of the blinds to be mortised are laid in the grooves *c* of the carriage E, and the cutter N being adjusted to the desired inclination, motion is imparted to the cutting tools—the cutter N cutting an oblique groove in the side rail; while, after two subsequent cuts of the cutter N being effected, the augers *n* enter the two ends of the first cut and finish it for the insertion of slats. The side rails are fed at regular intervals to the mortising tools, by stop F on spring blade *h* passing over a rack F on carraige C.

Claim.—The described machine for cutting mortises for window-blind slats, constructed in the manner substantially as set forth, and consisting essentially in the carriages E and C, in combination with the cutters N and bits *n*, operating in the manner specified.

No. 17,657.—THOMAS. D. WORRALL, of Lowell, Mass., assignor to THOMAS F. CALDICOTT, of Charlestown, Mass.—*Improved Bench Plane.*—Patent dated June 23, 1857.—By driving up the wedges F G, the plane iron E is drawn firmly down on its seat *d* formed in the holder C, and does not depend on the wood of the plane iron to enable it to be held in place.

Claim.—The improved manufacture of carpenters' bench plane or jointer, as made with its handle, its wooden stock to which said handle is affixed, and a separate metallic cutter, holder, and cutter clamping devices, arranged together, substantially as specified.

No. 17,553.—JOEL BRYANT, of Brooklyn, N. Y.—*Improved Stock for Bench Planes.*—Patent dated June 16, 1857.—The nature of this invention will be understood by reference to the claim and engravings.

Claim.—The construction of bench planes having an opening O, with a backward inclination made by the dispensing with or the removal of the lower edge or lip of the plane stock, (as existing in bench planes of ordinary construction;) the said opening being made for the purpose of avoiding the annoyance produced by splinters or small pieces of wood fastening in the recess, as formed by the said lower edge or lip of the plane stock, and the bevel of the iron in common bench planes, substantially as described for the purpose set forth.

No. 17,965.—JESSE M. GILSTRAP, of Washington county, Ark.—*Improved Machine for Whetting Plane Bits.*—Patent dated August 11, 1857.—The bit to be whetted is inserted within the bit holder H; and a reciprocating motion being given to pitman I, the bit holder is operated within the ways H, and the edge of bit T is whetted on the stone M, while the spring rod I exerts an even pressure upon the friction roller K and bit holder H.

Claim.—The use of the bit holder H, constructed as described, when operated by the devices arranged in the manner and for the purpose specified.

No. 16,805.—OLDIN NICHOLS, of Lowell, Mass.—*Improved Carpenter's Plane.*—Patent dated March 10, 1857.

Claim.—Connecting the cap D to the plane iron C by the hook-headed bolt E, with two nuts F and G thereon to hold them together, and then securing the iron to the plane stock A by a cam shaft H operating upon this same hook-headed bolt, which is so adjustable as to be lengthened or shortened that any desired pressure may always be had to firmly hold the iron to the stock by turning the cam shaft, and still allow the plane iron to be moved in or out of the plane, to cut a thick or thin shaving without further tightening or loosening it; these parts being arranged and operated in the manner and for the purposes fully set forth.

Also the plate *g* secured to the plane stock, and intervening between the surface *a* of the hook E and the surface *e* of the cam shaft H, to prevent wear of the hook and cam, and also to prevent the hook E and plane iron C from sliding back when the cam shaft H is turned to tighten the iron to the plane stock, essentially in the manner and for the purposes fully set forth.

Also the application of one single handle B to answer for and be secured to a whole set or any number of plane stocks, either in the lower or elevated position, and changeable from one position to another, or from one plane to another, instantly, and be secured firmly thereto, by means of the hook K and cam L, or their mechanical equivalents, arranged and operated essentially in the manner and for the purposes fully set forth.

No. 16,889.—M. B. TIDEY, of Ithica, New York.—*Improved Carpenter's Plane.*—Patent dated March 24, 1857.—In the cavity constructed in the plane a metallic bit case, as seen at A, is applied, which is secured thereto, by screws *d d*, through slots *e e*, entering nut *f*, said nut being a rod of iron passing through the plane stock for that purpose. The bit case passes through the stock, its lower extremity constituting a section of the plane's face, being provided with a mouth *g*, and other formations necessary for the reception of the bit, and its means of fastening thereto.

The object of this invention is to render planes more durable, retain a uniform mouth, obviate their clogging, and retain the essential part of the plane when the stock is worn out.

Claim.—The application to the cavity of the plane stock of a metallic bit case, and so applying it that its lower extremity shall constitute a part of the plane's face, constructed and operated substantially for the purpose and in the way set forth.

No. 17,541.—PORTER A. GLADWIN, of Boston, Mass., assignor to Himself and THOMAS FORD CALDICOTT, of the same place.—*Improved Tonguing and grooving Hand-plane.*—Patent dated June 9, 1857.—The nature of this invention will be understood by reference to the claim and engravings.

The inventor says: I do not claim the combination of tonguing and grooving cutters, upright and horizontal guides in one stock, wherein the tonguing and grooving cutters are arranged to slant in

opposite directions. But what I do *claim* as an improvement in the match plane is the tonguing and grooving cutter or cutters *k* and *i* in a single throat, and to slant in one direction, in combination with arranging the vertical guides c^1 and d^1 so that one shall stand below the other, and the horizontal tongue guide f^1 g^1 be arranged between them, as specified.

No. 17,618.—WILLARD W. CHIPMAN, of Lowell, Mass.—*Improved Method of Holding and Adjusting Plane-Irons in their Stocks.*—Patent dated June 23, 1857.—When the thumb-screws I and I^1 are unscrewed, the frogs H H^1 release the sliding piece E, through the slot of which the head of screw F passes; and in this position the slide E is at liberty to move up and down freely in the groove *f* of the frame G, and the plane-iron *c* can be adjusted to its proper place, which, being done, the thumb-screws I and I^1 are turned up against the frogs H and H^1, wedging the slide E into the grooves of frame G, and thus securing the plane-iron firmly in its place.

Claim.—The use and application of the apparatus for holding and adjusting the plane-iron, substantially as and for the purpose described.

No. 17,645.—WILLIAM STODDARD, of Lowell, Mass.—*Improved Mode of Securing and Adjusting Plane-Irons in their Stocks.*—Patent dated June 23, 1857.—By moving lever A to the right or left on its cam stand C, the upper ends of the irons B and G are lowered or raised at the same time that the lower ends thereof are moved in an opposite direction by their connexion with stand I, and the irons B G are thus firmly secured and pressed to the plane-stock F.

Claim.—The grooved stand I, double-headed bolt H, in combination with the cam A and its stand C, for the purposes set forth and described.

No. 16,569.—J. F. PALMER, Auburn, N. Y., assignor to S. W. PALMER, Detroit, Michigan.—*Improved Joiner's Plane.*—Patent dated February 3, 1857.—The plane iron E^1 may be set by turning the screw rod E; plate D and plane iron E^1 are held up by means of spring *b*, when the plane is being drawn back and they are forced downward, when the plane is shoved forward by pressing the palm of the hand against the plate I, the rod H being shoved forward thereby, and the fork *l* pressing down the nut F, and consequently the plate D and plane iron.

Claim.—The two plates C D and plane iron E^1 arranged relatively with each other as shown, and used in connexion with the screw rod E and rod H, as described for the purpose set forth.

No. 17,286.—BENJAMIN J. LANE, of Newburyport, Mass.—*Improved Joiners' Plane.*—Patent dated May 12, 1857.—The nature of this invention will be understood by reference to the claim and engraving.

The inventor says: I do not claim separately the screw rod D for raising and lowering the iron C, for that has been previously used for effecting the same purpose.

But I *claim* the sliding plate E, with bar *l* attached, through which the screw rod D passes, the plates E being operated by the wedge *n* and screw rod *o*, substantially as described for the purpose set forth.

Also in combination with the plate E and bar *l*, arranged and operated as shown, the screw rod D applied to the iron C, and connected with the plate E and bar *l*, as described; whereby the iron C may be adjusted or set with facility, and also secured firmly in its proper position within the plane.

No. 17,332.—James Lashbrooks, of Owensboro', Ky.—*Improved Joiner's Plane.*—Patent dated May 19, 1857.—This invention consists in the use of a curved bit C, whereby a handle B can be used on all planes, however short, without any inconvenience.

Claim.—The curved plane iron C and cap F, in combination with the curved back rest and slotted plate D, operating as described, and for the purpose set forth.

No. 17,951.—Thomas D. Worrall, of Lowell, Mass.—*Improved Joiner's Plane.*—Patent dated August 4, 1857.—The nature of this invention will be understood by reference to the claim and engravings.

Claim.—First. The employment of the clamp lever C for securing and bedding the bit, in the manner fully set forth and described.

Second. The clamp lever C, as arranged, in combination with T-strap B, and nut F, for the purpose of regulating and adjusting the bit for cutting, when firmly bedded and secured, as set forth and described.

No. 16,954.—Henry S. Dewey, of Bethel, Vt., assignor to Himself and Levi W. Newton, of Dorchester, Mass.—*Improved Machine for Cutting the Throats of Carpenters' Plane Stocks.*—Patent dated March 31, 1857.—In operating with this machine, a cutter or burr is first employed to form by successive cuts the main part of the shaving throat. The cutters H and I are then brought into use; the object of the cutter H being to cut for shaft K a path in those parts of the wood that are left between the cavity first cut and the channels made by cutter I. The cutters by successive and proper adjustments are operated so as to remove the greater part of the wood necessary to the formation of the mouth.

Claim.—The combination of the shaft path cutter H, the plane iron and wedge throat cutter I, the movable carriage A, and the adjustable bearing L, by which the inclinations of the ends of the throats may be obtained, as described, the whole being in the manner and for the purpose as specified.

No. 18,312.—Thomas D. Worrall, of Lowell, Mass.—*Improved Method of Attaching Adjustable Handles to Joiners' Planes.*—Patent dated September 29, 1857.—In attaching this handle to planes, a groove is cut in the top of the plane, and a mortise in the side; the groove and mortise meeting form a T-shaped slot; the nut E fits in the body of this slot, and the flanges formed by the projecting of the button beyond the side of the nut fit in the arms of the slot. Plate

D fits on the top of the plane, between the arms or jaws of nut F, and over the slot; screw E passes through the slot, in cap plate D, and enters the nut F, and secures the handle firmly to the plane. By means of the slot in the cap plate, the handle may be made to assume the position seen in fig. 1, or strap C may be made to fit up snug against the plane, as is the general manner of using it.

The inventor says: I *claim*, first, the combination and arrangement of cap plate D, screw E, nut F, and T-slot *o* in the plane, for the purpose of providing and securing a movable handle to planes.

Second. I claim the arrangement of cap plate D, slotted strap C, and screw *a*, for the purpose of adjusting the handle vertically, when desired by the operator, as set forth and described.

No. 16,412.—THOMAS J. TOLMAN, of South Scituate, Mass.—*Improved Method of Adjusting the Size of the Mouth in Planes.*—Patent dated January 13, 1857.—The nature of this invention will be understood by reference to the claim and engraving.

Claim.—The application to the common plane of the screw attachment A and key B, through the same, thereby regulating the mouth and greatly increasing its value.

No. 17,921.—JOHN F. W. ERDMANN, of Philadelphia, Pa —*Improved Stock for Smoothing-Planes.*—Patent dated August 4, 1857.—The cutting angle of the bit C may be varied by simply shifting wedge C from one side of the bit to the other, while the elastic strip D prevents any shavings from entering the throat of the plane back of the iron.

The inventor says: I am aware that an iron similar to mine is known as a scraper, and that irons have been adjusted in stocks with mechanism for changing the cutting (or scraping) angle, and I do not wish therefore to be understood as claiming such features as my invention.

But I *claim* placing in the throat of the plane, back of the iron, the elastic strip D, substantially as and for the purpose described.

No. 17,300.—EDWARD Q. SMITH, of Cincinnati, O.—*Improved Machine for Planing Chair Seats.*—Patent dated May 12, 1857.—The stuff I to be operated upon is cut to the proper size and placed upon bed P, motion being imparted to the cutter head J; the cutters *j* plane the stuff, while the feed rollers D bear upon it and feed it over the cutter shaft. The wheel N also bears upon the stuff I and is rotated by it on shaft L, causing cam *h* to rotate and by means of yoke K to raise and lower the bearing *d* of the cutter shaft J, so that the face side of the stuff will be cut in the required shape for chair seats.

The inventor says: I do not claim broadly the shifting or lifting of cutter shaft or bearings thereof by means of cams, for this is an old and well known method. Nor do I claim adjusting the table or carriage by means of wedges.

But I *claim* in chair seat machines the combination, by means of the universally jointed shaft L, of the feed wheel N with the eccentric *h*, when the said wheel N derives its motion from the chair seat, substantially as and for the purpose described.

No. 17,343.—HENRY D. STOVER, of Boston, Mass.—*Improved Rotary Planing Cutter.*– Patent dated May 19, 1857.—The cutting irons O G are secured to the cutter head by means of the curved steel plates N, the bevelled edges J of which enter corresponding grooves in the heads B and C, when the screw-nut D is tightened.

Claim.—The described method, or its mechanical equivalent, for securing double or single cutting irons to cutter heads, to hold them secure when in use, essentially in the manner and for the purposes set forth.

No. 18,007.—H. H. BAKER, of New Market, N. J.—*Improved Rotary Planing Cutters.*—Patent dated August 18, 1857.—The face of the cutter head A prevents the cutters from entering the wood beyond a given depth, as the edges of said cutters are within the recess *b*, and the lumber can be fed to the cutters by hand without the use of rollers.

The inventor says: I would not wish to be understood as claiming the use of rotary cutters as used by Daniel Woodworth, Fay, and others.

Neither do I claim a rotating disk, as I am aware of its having been previously used.

But I *claim* the recess *b* in the face of the cutter wheel, substantially for the uses and purposes set forth.

No. 16,513.—SYLVESTER SAWYER, assignor to the AMERICAN HOOP MACHINE COMPANY, of Fitchburg, Mass.—*Improved Machine for Planing Hoops.*—Patent dated January 27, 1857.—This invention consists in certain improvements upon a machine for which letters patent, dated May 6, 1856, were granted to myself, in connexion with Joseph Sawyer, for improved hoop machine. The nature of this machine will be understood from the claims and the engravings.

Claim.—Giving the frame N, which carries the roll L, a play between the adjusting screws *m* and *n*, and bringing the roll up to its work by the spring P, in the manner and for the purpose set forth.

Second. I claim the eccentric R, lever S', graduated arc T, and spring Q, operating in the manner described, for the purpose of regulating the thickness of the hoop, and of forming the lap, as set forth.

Third. I claim the combination of the cutters *b* and *c*, and arranged in the manner set forth, upon the reciprocating gate E, in combination with the rest H, operating in the manner substantially as set forth.

No. 17,171.—THADDEUS S. SCOVILLE, of Elmyra, N. Y.—*Improved Machine for Planing Hoops.*—Patent dated April 28, 1857.—The hoop P is fed in between the India rubber rollers B, the springs K holding the hoop against the curved ways *c*. The hoop feeding past the first spring K strikes the roller E, which, being held firmly by stronger springs, forces the hoop against the weaker springs *e*, which gives way, letting the hoop on to cutter C, and, passing the second spring K, is fed out of the machine by India rubber rollers G.

The inventor says: Machines with rotary cutters have been used for dressing hoops.

India rubber feed rollers and elastic guides have been used; these I do not claim.

But I *claim* the employment of a concave guide *c c*, arranged with a hinged portion immediately before the cutters, which is held in place by a spring having less pressing force than the counter gauge roller E, in combination with said gauge roller, or its equivalent, substantially in the manner and for the purposes set forth.

No. 18,806.—JOHN D. DALE, of Philadelphia, Pa.—*Improved Planing Machine.*—Patent dated December 8, 1857.—The object of the improvements in this machine is to make a planing implement that will "true" boards, planks, and other carpenter stuff, and take the same out of wind; plane, tongue and groove; make several mouldings at once, either of the same or of various patterns, and separate each moulding; make sash stuff and tenon the same; do other tenoning; work circular moulding, and do circular work of every description.

The engravings and claim further describe the nature of this invention.

The inventor says: I disclaim all part separately of the before described machine that are not hereinafter specifically claimed by me.

But I *claim*, first, the arrangement, as described, by which the support rollers No. 17 and the feed roller C are raised, and the carriage E simultaneously secured; whereby I make a permanent bed and continuous feed, and by lowering the same I make a reciprocating moving bed plate or carriage, and am enabled to change from one side to the other, at the will of the operator.

Second. I claim the arrangement whereby an adjustable cutting bed No. 37 is formed on the end of the movable carriage E, for the uses and purposes as described.

Third. I also claim the combination and arrangement of the method set forth for attaching side cutters, by which they are both rendered adjustable, in the manner specified and described by letters G G, representing cranes supporting the side cutters hanging on arms K K, supported and adjusted by guide braces L L and screw nuts J J, all for the purpose and in the manner set forth and described.

Fourth. I also claim the particular arrangements, in combination, by which the pressure bar N and the transverse bar Q are made to raise, and by which they are made to correspond with the circumference of the rotary cutter by raising the superior feed roller D, for the purpose as set forth.

No. 17,963.—BENAIAH FITTS, of Worcester, Massachusetts.—*Improved Arrangement of Feed Rollers for Planing Machines.*—Patent dated August 11, 1857.

The pinion H is held firmly in gear by the connecting arms J and I when the roll B is raised or lowered.

Claim.—In driving gears on feed rollers for wood planing machines, the internal gear F and the external gear G, in combination with the pinion H and connecting arms I and J, when constructed and operated as set forth and described.

No. 17,315.—DAVID N. B. COFFIN, jr., of Newton, Massachusetts, and HENRY D. STOVER, of Boston, Massachusetts.—*Improved Devices for Dogging Lumber in Planing Machines.*—Patent dated May 19, 1857.

When the dog *b* is to be set, the operator has only to bear upon the toothed side, so as to raise pawls *e* from the rack *c*, when he can move the dog over the platen to the desired place, the pawl *e* of which holds the dog whenever the lumber is pressed against its teeth. On forcing up the dogging bars *h* against the lumber, by turning screw *i*, parts J begin to draw upon the pins *g*, and, so drawing cross-bar F down towards the platen, firmly clamp thereto the screw *i*, at the same time forcing their points into the lumber.

Claim.—We claim the bar *b*, constructed and arranged substantially as set forth, in combination with the rack *c*, or its equivalent.

Also the device for the rear end of the platen, so constructed and arranged that the dogging bars are clamped firmly to the platen, at the same time that they adjust themselves to the form and position of the end of the lumber by the operation of a single screw, substantially as described.

No. 17,873.—GEORGE DARBY and JAMES E. YOUNG, of Augusta, Maine.—*Improved Shell Roller Bed for Planing Machines.*—Patent dated July 28, 1857.

The hollow rollers X are of such a diameter that they can be slid over the bevelled rollers R; and, by turning the screw rods T T, they can be set so as to plane any bevel that may be desired

The inventors say: We are aware that cylinder or revolving cutters, and also that pressure or yielding feed rollers, have been used in planing machines, likewise that motion has been applied to the feed rollers in various ways. Therefore we do not claim either of these arrangements in connexion with our invention; nor do we claim the rocker boxes and sliding bars upon which the feed rollers rest.

We *claim* the combination of the hollow or shell rollers X X X with the bevelled grooved rollers R R R, whereby a bevel grooved or straight bed is formed, in the manner and for the purpose as described.

No. 17,833.—JONATHAN HALL, of Worcester, Massachusetts.—*Improvement in Feed Rollers of Planing Machines, &c.*—Patent dated July 21, 1857.

Between the shaft of feed roller B^1 and shaft P is a connecting bridle L, one end of which is attached to the shaft of B^1, and which rises and falls as this roller is moved, and the other end of which is connected to shaft P and moves it in its slot S; thus, when the roller B^1 is raised or lowered, the pinion K will be constantly kept in gear with wheel T, which rises and falls with roller B^1.

The inventor says: I do not claim, generally, the adjustability of feed and other rollers, or accomplishing this without any change of gearing, as these ends are gained by other methods now known.

But I *claim* the application and use of internal gearing H H, substantially as described.

I also claim, in combination therewith, the arrangement of the movable box R and connecting bridle L, or their equivalents, for the purposes set forth.

No. 16,403.—Reuben W. Sharp, of Montgomery, Alabama.—*Improved Machine for Planing Shingles or Tapering Pieces.*—Patent dated January 13, 1857.

The shingles *e* are placed within the box F, and as disk *c* on the driving shaft rotates, a reciprocating motion is given to the slide E and carriage O. As the slide E moves forward it shoves forward the lower shingle, the under surface of which is planed level by cutters *b* on head *a*; and as the shingle passes underneath the cutters *d* on head *c*, the upper surface is planed and bevelled, the cutter head *c* being supported by frame K, which rises and descends by means of the inclined edge of board M, resting on carriage O.

Claim.—The combination of the reciprocating slide E and vibrating and rotating cutter head *c*, with or without the stationary cutter heads *a*, arranged and operated as shown, for the purpose set forth.

No. 16,427.—Daniel Berlew, of Delaware, Ohio.—*Improved Method of Planing Sashes.*—Patent dated January 13, 1857.—The required pieces of wood being sawed out, they are clamped to carriage B, the circular saws *h* cutting the pieces to the desired length; the tenon is made by rotary knives *j* on shaft *i*, the knives c^1 on shafts *k* moulding the shoulder on the tenon; after which the piece is discharged from carriage B, and moved forward by feed rollers *o*, guided by hooked springs *p*, adjustable rest *q*, spring *r*, spring guard S; and the piece is planed by knives on rotary head *t*. The forward end of the piece is guided into hooked spring *v* after the rear end of the piece passes the spring guard S, spring *r*, slotted spring *u*; and piece *w* changes it on to guard *x*, and the recoil of hooked spring *v* in slotted spring *u* brings the rear end to the opposite side of rotary head *t*, where it is moved forward by feed-roller *y* and planed on that side by the knives on cutter head *t*.

The inventor says: I am aware that tenoning and coping heads have been used before; those I do not claim.

I *claim* the combination with the reciprocating carriage B and frame H, the hooked and slotted springs V U, or their equivalents, all arranged and operated as set forth.

No. 18,089.—Leonard O. Fairbanks, of Bridgeton, Maine.—*Improved Saw-Clamp.*—Patent dated September 1, 1857.—A saw plate when placed between the jaws C D may be clamped to them by screwing down clamp G, which, acting on part *b c* of the movable jaw D, forces the face of jaw D towards that of jaw C, the adjusting screws F serving to adjust the jaws for the reception of a saw plate of any thickness.

The inventor says: I do not claim a saw clamp made with jaws,

and with a clamp screw extending through such jaws perpendicularly to their holding faces.

But I *claim* my improved saw clamp, as made with its jaws, clamping device, adjusting screws, and bed plate, arranged and applied in manner and so as to operate together, substantially as described.

I also claim making the stationary jaw with a groove *e* arranged in it, in manner and so as to operate with the movable jaw, when constructed and made to act with respect to the stationary jaw and bed plate as explained.

No. 18,378.—A. M. BEARDSLEY, of White Pigeon, Michigan.—*Improved Saw-Filer.*—Patent dated October 13, 1857.—The claim and drawings explained the nature of this improvement.

The inventor says: I *claim* the arrangement of the centrally pivoted plate for carrying and supporting the file carriage in combination with the adjusting index and set screw, whereby the adjustment of the files for filing the right and left bevels of the teeth is effected without shifting or changing the implement from one side of the saw to the other, as described.

Second. The employment of a pair of removable extension legs in combination with the implement, whereby it is adapted to file circular saws of varying diameters in the manner set forth.

Third. Arranging and sustaining the implements or main plate upon which the file carriage is mounted, at an angle to the radial extension legs, as shown in figure 1, for the purpose of regulating or governing the pitch or hook of the teeth being filed in the manner set forth.

Fourth. Securing the files in their holders in such manner that they can be adjusted to vary the relative angles thereof, and adapt them to the teeth of different sized saws as described.

Fifth. Mounting the two files in removable holders, so that they can be taken out of the brackets which support them, and be reversed longitudinally without disturbing the relative angles or set of the files, as described.

No. 18,415.—JONATHAN SMITH, of Agawam, Massachusetts.—*Improved Saw-Filer.*—Patent dated October 13, 1857.—This invention is for the purpose of guiding and directing the operation of filing circular saws, so as to perform the same accurately and preserve the circular figure of the saw while giving to each tooth the proper form and bevel, and sharpening the same by hand filing.

In the drawings, *a* is a U-shaped piece of metal, the legs of which fit over the saw as seen in the drawing: near the bend of this piece of metal two pieces of case-hardened steel *b* are affixed to it, one on each side; and these pieces are made to the exact form the tooth is to be filed to, as clearly represented and seen in figure 1, which represents one common form of tooth and the hardened steel gigs *b* adapted thereto. The bow *a* has two set screws *c d* on one side, and one *e* on the other, as seen in the drawings, by which it can be set on the saw at any cross angle or straight across as desired; by which the face of

each tooth *f* can be filed so as to draw either way in cutting, or be made straight across without any draw.

The inventor says: I *claim* the combination and arrangement of the parts herein described, consisting of the gigs, regulating set, and centre guide, in the manner and for the purposes specified.

No. 18,324.—HARLEY STONE and JEREMIAH S. COLE, of Blackstone, Massachusetts.—*Improved Saw-Filing Machine.*—Patent dated October 6, 1857.—The operation of this machine is as follows: A straight saw is placed in the clamps *i i* and secured by its screws, and the clamps adjusted to bring the saw into position under the file in R, and the frame P adjusted to give the file the proper angle and inclination according to the tooth to be filed; the file being screwed into the sockets of R, to fit the side of the tooth it is to shape; the gauge *x* being set, by its supporting-arms *v w*, to stand near the saw, and so as to be touched by the file (when the tooth is sufficiently filed) to cast off the catch *c*, the carriage being at the extreme left; the lever O is placed down to give proper motion to the screw-shaft D, the catch of whose driving-gear is placed to correspond. Motion being given to the clutch and crank, the clutch, being thrown into play with *z*, drives the shaft E, which operates the file until it cuts the tooth sufficiently to touch the gauge *x;* when, casting off the catch C from the lever B, the spring H shifts the clutch from Z to R, and the shaft E stops; the screw-shaft F, receiving its motion, is turned until the stud on the wheel S, passing behind the lever M, throws the clutch back into the former position.

The clutch, being shifted, replaces the lever B to its catch, and gives motion to the file as at first; and the wheel S and its companions are returned to place by its spring, ready to act again.

The inventors say: We do not claim broadly the use of a gauge to prevent the file cutting too low, or the use of a movable carriage; as machines have been made with these features, but were constructed upon different principles from ours, and cannot accomplish the same results.

But we *claim* the file holder, constructed as described in combination with the stop-gauge and feeding mechanism, arranged and operating substantially in the manner and for the purposes set forth.

No. 17,153.—OLIVER B. JUDD, of Little Falls, New York.—*Improved Saw Gummer.*—Patent dated April 28, 1857.—The saw being inserted within the slot B, it is fastened therein by means of the set screws J; and the teeth of the saw are cut by the circular cutter *i*, which is operated by means of crank K. The cutter *i*, when in the position represented in the engraving, serves for cutting the teeth of circular saws. For cutting the teeth of straight saws, the shaft of the cutter *i* is inserted in suitable bearings in the side of cap D, which can be operated by means of screw E and spring F.

The inventor says: I do not claim dressing saw teeth on a circle, as this has been done imperfectly by means of complicated machines.

I *claim* the method of constructing and arranging the posts G G so as to cause the cutter to move in regular curves, as described.

No. 18,394.—WOOSTER A. FLANDERS, of Troy, N. Y., JAMES B. DRAKE, of Williamsport, Pa., and A. W. FOX, of Elmira, N. Y.—*Improved Saw Mill.*—Patent dated October 13, 1857.—In the drawings A A is the saw, B and C the pulleys on which it runs, D is the adjustable frame for the pulley B, E is the log, and F the carriage. The saw is made of flexible steel, and runs as a belt over the pulleys, the lower pulley being driven by power. The frame D is movable upon the bolt G, which forms its bearing in the post H, and has attached to its extremity a rod I, by which it is connected with the weighted lever J. By regulating the weight K on this lever the requisite tension is obtained.

To prevent the saw from bearing so hard against the flange *a* as to produce unnecessary friction or wear, the upper pulley (on which this effect would be chiefly produced) is inclined or canted slightly towards the log, or in the direction from which it is fed, so as to give it a slight tendency to run off, which is prevented by the pressure of the log against the teeth, and just serves to prevent friction upon the flange.

The inventors say: We are aware that an endless or belt saw is not new, and such simply we do not claim.

But we *claim*, first, canting or inclining the saw pulley B forward and back, for the purpose described, by means of the slide-post T and wedge *c*, operated as described, or by any analogous means by which the same results are procured.

Second. We also *claim* the arrangement and combination of the track clearer Y, the adjustable frame D, the weighted lever J, and saw A, in the manner and for the purpose described.

No. 17,537.—HIRAM WELLS, of Florence, Mass.—*Improved Automatic Saw-Mill Blocks.*—Patent dated June 9, 1857.—The log resting on the carriage F can be traversed towards the saw by lifting lever K out of its recess V, when it can be turned on its fulcrum I, and will operate rack H and the head block N; or the feeding can be performed automatically by slide U on bar S coming in contact and operating lever K.

Claim.—The devices such as are described, or their equivalents, so constructed as to traverse the log towards the saw simultaneously on each head block, and set it automatically, or permit the workmen to set the log on either head block, or on all at the same time, by the lever *g*, when put into gear with the rack *k*, as described.

No. 16,795.—GEORGE W. HEARN, of Princess Ann, Md.—*Improved Method of Operating Saw-Mill Dogs.*—Patent dated March 10, 1857.—The shaft S^1 can be moved longitudinally so as to clutch it with shaft S. By this means the head blocks H H may be moved either together or separate, each of the shafts being provided with feed ratchet and connected mechanism. This arrangement gives a facility for difference of set to the opposite ends of the log.

The inventor says: I make no claim to operating the head blocks from the movement of a single ratchet wheel; nor do I claim the separate movement of the head blocks.

But I *claim* the longitudinally moving shaft S^1 in combination with the shaft S, and the clutches $f f^1$, arranged and operating as specified.

No. 16,888.—JOHN A. TAPLIN, of Fishkill, N. Y.—*Improved Saw-Mill Dogs.*—Patent dated March 24, 1857.—In the engraving D is the dog made up of the rock shaft *a* and arms *b* and *c*, the shaft *a* being attached to the blocks by straps *d* so as to turn therein. In sawing long timber the arms *b* are driven into the end of the log and held by wedges *f*. The log L passes through arms *c* on the outer block, and is held by wedges between these arms and the sides of the log. When the portion of the log exposed to the action of the saw is cut, it is secured between arms *c* on the head block, and a new portion of the log placed in position for the cut. R R are the traversing rollers, placed directly under the head and tail blocks H H^1, serving to permit the carriage to conform to inequalities of the traversing ways.

Claim.—The double arm rocking dogs, constructed, arranged, and operating in connexion with wedges as and for the purpose set forth, in combination with the traversing carriage as and for the purpose described.

No. 18,860.—T. T. PROSSER, of Oconomowock, Wis.—*Improved Portable Saw Mill.*—Patent dated December 15, 1857 —The nature of this invention consists in attaching circular saws *a* to a movable frame *b*, passing along a slide A, operated by a band F F and pulleys *h h*, for the purpose of obtaining a continuous succession of cuts to prevent stopping and reversing machinery, and avoid cutting both ways, making a slight durable machine and portable, when desired.

Claim.—The peculiar method of operating circular saws by means of a sliding frame attached to a movable chain or belt, in combination with the several parts fully described.

No. 18,474.—SAMUEL TARVER, of Jackson, Ark.—*Improved Reciprocating Mill Saw.*—Patent dated October 20, 1857.—The nature of this invention consists in providing a hollow blade with artificial teeth, so attached that the chips or dust cut by the teeth will not lodge or impact behind them, but pass out through the machine somewhat after the manner that a shaving escapes an ordinary hand plane.

Claim.—The inventor says: I claim a hollow saw, so constructed as that the dust will pass from it as fast as formed, and therefore contained in that association of parts described by B, D, E, E, T, H, H, K, K, K, in the drawings and by the two steel plates described in the specification, for the uses and purposes set forth.

No. 17,677.—HENRY HARPOLD, of Racine, O.—*Improved Adjustable Fender Posts for Saw Mills.*—Patent dated June 30, 1857.—In giving the top of the saw any required pitch or set, the bolts *d* must be loosened and the part A^1 of the fender post must be shoved in or out as the case may be; and when the required pitch is attained, the bolts must be again tightened.

Claim.—First, the fender posts A A^1 arranged in two parts and adjustable, secured together by hook bolts and working on a pivot on the

fender beams A^2, all operating in the manner and for the purpose set forth.

Second, I claim the jaws *i* and blocks *x* attached to the saw sash B, and working on a swivel arranged with the adjustable fender posts, for the purpose of giving the saw pitch and making it follow a desired curve as set forth.

No. 16,876.—FRANKLIN B. KENDALL, of Bath, Me.—*Improved Method of Operating Double Carriages in Saw Mills.*—Patent dated March 24, 1857.—This improvement consists in the application of double carriage sets to saw mills, with an improvement in the use and construction of the carriage shafts, the one hollow and the other solid, the solid one on the same line and extending through the hollow one so that each shaft in its connection with the carriage set will move independent of the other, each shaft having a cog or band wheel permanently fixed to the end, both occupying a very compact space; also, the application of double feed posts, the same being in one frame, so as to occupy but little more space than common feeding gear.

The inventor says: I do not claim operating double sets of carriages broadly.

But I *claim* combining the devices in the manner shown and set forth for the purposes stated.

No. 17,170.—IRA ROBBINS, of Unityville, Pa.—*Improved Method of Setting Brace Blocks of Saw-Mills*—Patent dated April 28, 1857.—As the carriage C is near the termination of its gigging back, the long arm of lever *o* encounters a pin *v*, causing the long arm of lever *m* to be lifted and pawl *i* to engage the ratchet wheel *h*. Pawl *l* prevents the ratchet from turning during this operation; lever pawl *k* prevents the weight of lever *m* from turning the ratchet *m* in the opposite direction. The pawl *i* has by this operation obtained such a position that when lever pawl *k* is removed, weight *n* will bring lever *m* down upon its seat a^2, and shaft *d* will be turned the requisite distance for effecting the desired set. As the carriage arrives at the end of its backward movement, stud *t*, by pressing against A of lever L, moves said lever, causing weight *r* to be lifted so as to slacken cord p^1; cord *q* is tightened and draws upon lever catch S so as to release spring s^1 at the instant long arm of lever *k* is over said spring, causing the spring to lift long arm of said lever and to effect the release of ratchet *h*, and the set is thus given to the end of the log at the proper time.

Claim—The combination of the lever catch S, spring S^1, cords p p^1 and *g*, weight r^1, stud *t*, and lever L, in connexion with the lever K, operating as and for the purposes described.

No. 16,697.—JOSEPH D. SPILLER, of Concord, N. H.—*Improved Saw-Set.*—Patent dated February 24, 1857.

Claim.—Combining the gauge and bearing screw in one movable frame applied to lower jaw, and furnished with a set screw, substantially as described.

No. 17,099.—Oliver B. Judd, of Little Falls, N. Y.—*Improved Saw-Set.*—Patent dated April 21, 1857.—In using this saw-set the tooth of the saw is entered into notch *a;* and by turning the handle A until one of the jaws F touches the blade of the saw, the tooth is set. This operation is repeated for each tooth by moving handle A forward and backward.

Claim.—The gauge E, having the jaws F F constructed as described, and when used in connexion with the revolving plate G, operated in the manner specified.

No. 17,620.—Jacob Erdle, of West Bloomfield, N. Y.—*Improved Saw Set.*—Patent dated June 23, 1857.—The saw S to be set is placed on flap B, the edge of the teeth being against the roller Q; and if the saw is to be moved in the direction of the arrow, the hand P is moved back from the saw teeth, and retained in that position by pin *a**. The hand M is kept between the teeth of the saw by spring *b**, and by operating lever J the hand M is actuated so as to feed the teeth of the saw to the punch G—said teeth resting on anvil D; and they are set to the required inclination by tapping the punch G with a hammer.

The inventor says: I do not claim feeding the saw teeth to the punch by means of a pawl or hand, irrespective of the arrangement of the same, for that is a well known mechanical device and has been previously used for such purposes.

But I *claim* the two plates or hands P M, when connected to the bar H, as shown, the bar H being actuated by the lever J, and the whole arranged substantially as described, for the purpose of feeding the saw teeth to the punch in either direction, as described.

No. 18,921.—Edward Marshall, of Brooklyn, N. Y.—*Improved Saw Set.*—Patent dated December 22, 1857.—This invention is used in the following manner: The saw to be set is placed in an ordinary saw vice, and the stock A is placed on the saw, the stops *n n* resting on the saw teeth, the stops being so adjusted that the punch D will act properly against the teeth. The stock A is moved along on the saw, and the punch D is forced against the saw teeth by depressing the handle F, the punch bending the teeth against the bed E and giving the set to the teeth. The degree or set may be varied by adjusting the set screws *k l m*, whereby the saw may have a position more or less out of line with the face of the bed E.

Claim.—The saw set, as a new article of manufacture.

No. 18,114.—John N. Wilkins, of Waukegan, Ill.—*Improved Machine for Planing Saw Teeth.*—Patent dated September 1, 1857.—The lowest recess of the saw being filed by hand, so that the crossbar *d* may fit snugly therein, and the case A being adjusted to the saw by adjusting roller E by set screw *l*, the lever D is vibrated on its fulcrum F, and the cutters *j* and K are vibrated, the cutter *j* cutting the lower edge and the cutter K the inclined edge of each tooth.

Claim.—The two planers or cutters *j* K, fitted within the case A and operated as shown, in combination with the guide or cross piece *d* within the case, the whole being arranged and applied to the saw as shown, for the purpose set forth.

No. 18,039.—PEARSON CROSBY, of Fredonia, N. Y.—*Improved Swage for Setting Saw Teeth.*—Patent dated August 25, 1857.—The saw is placed upon the plate *b*, and the teeth *g* are swaged by striking the head of the swage F with a hammer, which will have the effect of forcing the metal of the tooth into the acute angle of the swage, thus forming a sharp cutting edge.

The inventor says: I do not wish to be understood as limiting my invention to the special mode of constructing the stock, or of holding the two parts of the swage together, or the entire swage in the stock, as other and equivalent modes may be substituted.

I claim forming the acute angle of the acting face of the swage to bring the cutting edge of the saw teeth to a sharp angle by making the said swage in two parts, substantially as specified.

No. 17,719.—HENRY F. WILSON, of Elyria, Ohio, assignor to Himself and HENRY B. WEST, of the same place.—*Improved Cross-cut Sawing Apparatus.*—Patent dated June 30, 1857.—By turning shaft *a* a reciprocating motion is given to the saw L by means of connecting rod D, and the bars C and C^1 are caused to vibrate on their fulcra *b* and *c*.

Claim.—First. The radius bars A A^1 in combination with the vibrating bars C C^1, for the purpose of straining the saw, so as to enable me to give the saw a reciprocating motion without guides.

Second. Placing pins *b c* at a greater or less distance apart than pins *d d*, for the purpose of giving a rocking motion to the saw while reciprocating, said motion to be graduated according to the kind of wood to be sawed; the whole to be arranged, constructed, and operated in the manner and for the purpose specified.

No. 18,745.—JOHN C. HINTZ, of Cincinnati, Ohio.—*Improved Machine for Sawing Bevelled Curves.*—Patent dated December 1, 1857.—A is a bench mounted with a feed roller B, and traversed by a large "scroll" or "jig" saw C, actuated by "power," in the usual manner. The feed roller has longitudinally the represented spheroidal form, to adapt it to forward the log in whatever canted position it may be placed. The work is placed completely under the control of the operator while standing at his post near the saw.

D D^1 are two cranes, supporting each of them a carriage E E, each carriage being surmounted with a turning rest F F, armed at the top with points or burrs. J is a vibrating frame or rest, connected with the bench A by a horizontal hinge *j*, in a line, or nearly so, with the plane of the saw. The free edge of this rest is subject to elevation and depression by means of a winch *l*, attached to a nut L, which communicates through a screw-threaded rod K with an arm depending from the rest J.

Claim.—First. The cranes D D^1, with the traversing and turning rests E F E^1 F^1, communicating by means substantially as described with a winch *g*, or its equivalent, convenient to the hand of the sawyer, in the described combination with a scroll saw and feed roller for the purpose set forth.

Second. In this connexion, the rest J *j*, constructed and operated substantially as and for the purposes set forth.

No. 16,814.—C. P. S. WARDWELL, of Lake Village, N. H.—*Improved Circular Sawing Machine.*—Patent dated March 10, 1857.—C C^1 C is a swing frame resembling a letter H, viz: consisting of two parallel bars C C, connected in the middle by a tube C^1; the ends of these bars C C contain the bearings for the saw cutter arbors E E; the arbor J carries a cutter; the tube C^1 has bearings in the standards D D, and is the fulcrum about which the frame C C can be swung by means of handle N, wormwheel L, and sector K attached to tube C^1; an arbor J, carrying a cutter for cutting double tenons, passes through tube C^1. The machine as represented in figures 1 and 2 is ready to be used for sawing, and when adjusted, as represented in figure 3, it is to be used for tenoning; in this figure 3 tenoning cutters Y Y are placed instead of the saws G G, and one of these cutters Y will be brought into action while the other one is below the table.

Claim.—The arrangement of two or more saws or cutters in a swinging frame, so that either saw or cutter may be brought into a suitable position for action, while at the same time the other or others shall be removed from the way, in the manner specified, or in any equivalent manner; and this I claim whether or not a central or axial saw, or cutter, is combined therewith, or with a single swinging saw or cutter.

No. 18,402.—THOMAS MILES, of Greenbush, N. Y.—*Improved Device for Guiding the Logs in Sawing given Curvatures.*—Patent dated October 13, 1857.—The operation of this improvement is as follows: the stick to be sawed being placed upon the carriage and made fast to the head block D and the top piece F, the guide I is adjusted to the bend of the timber by means of the screws J J; then upon the mill being put in motion, the stick will be carried up to the saw, so that the cut will be made in the direction of the grain of the wood, or nearly so, through the means of the guide I; the guide I may also be adjusted in a line with the ribbons A A, so that there will be no lateral motion to the top piece F; consequently a perfectly straight cut may be made when it is so desired.

The inventor *claims* giving to the top piece F of the tail block a lateral motion, by means of the adjustable guide I, substantially as and for the purposes set forth.

No. 18,960.—JOHN DAVIS, of Cincinnati, Ohio.—*Improved Machine for Sawing Hand Rails or Stair Wreaths.*—Patent dated December 29, 1857.—Near the centre of each clamp stock *k* k^1 a pair of jaws or clamps M M^1 *m* m^1 are so hinged as to be capable of adjustment in a longitudinal vertical plane. Each jaw is provided with an arched crochet *n*, which works in a socket *o* containing a set screw *p* for holding the jaw to any desired angle. The two jaws of each pair may, if preferred, vibrate in unison, the front jaw M *m* of each pair being

provided with a set screw *r* to hold the timber in contact with the face of the back of the jaw M^1 m^1.

The inventor says: I am aware that it has been proposed to produce stair rail wreaths by presenting the plank from which they are to be sawn at an oblique angle with the axis of rotation of the saw equivalent to that afforded by the longitudinal adjustment of my clamp stocks K K^1, or their equivalent.

But I *claim* first. Providing what is technically known as "spring" in the rail by presenting the sides of the plank (that is to say, the cutting planes of the warped surface) acutely or obtusely to the plan of adjustment of the clamp stocks K K^1, or their equivalent.

Second. The described construction and arrangement of the hinged jaws M M^1 *m* m^1 and their accessories *n o p*, operating as explained in combination with the adjustable clamp stock K K^1.

No. 16,407.—Emerson C. Strange, of Taunton, Mass.—*Improved Machine for Sawing Hoops.*—Patent dated January 13, 1857.—The hoop poles are passed between the rollers I J and K, and the hoop is cut by the saw B. By pressing upon lever F, the movable journal box E is moved outward, carrying with it shaft A, saw B, and pulley *c*, and lever M, with its attachments; and when at such a distance as to give the desired thickness to the hoop, the lever F is kept from returning to its original position by turning cam H until it presses against it.

The inventor says: I do not claim the use of pressure rolls upon hoop-sawing machines, for these have been used before; neither do I claim the levers F and N, or the side lever O, or the cam H, by themselves alone.

But I *claim*, first, making the saw B of the peculiar form, as shown, a plain circular saw with a bevelling or angular edge or rim; not confining myself to any particular angle which this rim makes with the saw plate, but using that which is best adapted to the work.

Second. The cam H, the sliding journal box E, the lever F and its connexion, the shield S and the lever M and its attachment, as specified, so as to operate together, for the purpose and in the arrangement substantially as set forth.

No. 16,435.—George Gregg, of Lowe's Mill, Va.—*Improved Sawing Machine.*—Patent dated January 20, 1857.—The nature of this invention consists in having two saws *g* attached to the ends of beams *b*, which are pivoted on a central fender post *a*, so that they balance each other and require no more gearing than a single saw.

Claim.—I do not claim any of the parts separately; but claim the whole, when constructed and operated as set forth.

No. 17,112.—H. F. Purmort, of Saginaw city, Mich.—*Improved Sawing Machine.*—Patent dated April 21, 1857.—By operating lever N, pawl *e* will act on ratchet H; and the shaft G will be turned, the pinions *d* acting on rack *e*; and the two heads F, to which the log P is attached, will be moved simultaneously, so that the proper set is given to the log for the saw R to operate upon. The feed motion of the

carriage B can be reversed or restored by bringing one of the wheels X or V in contact with the wheel Y, the shaft *c* of wheel Y causing pinions *b* to operate racks *a* on carriage B.

The inventor says: I am aware that the blocks of saw mills have been operated simultaneously both by hand and automatically; and also reciprocal motion has been reversed in the same, or in a way equivalent to that described.

I do not claim, therefore, separately, the parts for effecting the purposes stated.

But I *claim* the sliding heads F F placed on the blocks E E, and operated by the pinions *d*, racks *c*, pawl *e*, and ratchet H, and the carriage B operated by the wheels V X placed on the shafts U W, when the above parts are arranged as shown and described for the purpose set forth.

No. 18,443.—J. T. Foster, of Jersey City, N. J.—*Improved Sawing Machine.*—Patent dated October 20, 1857.—The claim and engravings show the nature of this invention.

The inventor says: I do not claim the arrangement of teeth on both edges of a reciprocating saw, so as to cut in both directions of its motion.

But I *claim* imparting to the saw provided with teeth on its opposite edges, which cut alternately in opposite directions, a reciprocating lateral motion, in the plane of its longitudinal motion, equal to and corresponding with the feeding of the articles to it from opposite sides, as specified.

I also claim giving to the way guides in which the saw gate runs an alternate motion at right angles to the motion of the saw, and equal to the feed motion on each side, substantially as described.

I also claim the combined arrangement of parts, by which the cutting throw of the saw and the feed motion are produced by the same vibrating lever H, which drives the saw, and are consequently always precisely equal, invariably correspond with the motion of the saw, and are varied simultaneously to any extent, without disarranging this harmonious agreement of all the motions, substantially as set forth.

No. 18,570.—Harvey Brown, of New York.—*Improved Sawing Machine.*—Patent dated November 10, 1857.—In the engravings A is the frame of the machine or mill, B the saw mounted upon the pulleys C C¹, D D the driving pulleys, E the counter shaft, F the principal driving band, G G the transverse shafts, H the ways, I the carriages, K the bands that move the carriages, L a second counter shaft, M the cog-wheels connecting the shafts E L, N the plummer blocks, and P the slides or friction rollers.

The inventor says: I do not claim a saw or band running over pulleys without reference to its construction and operation.

First. I *claim* the ways H, constructed substantially in the manner and for the purposes as set forth.

Second. I claim the arrangement of gearing for the purpose of moving the carriages I I I I I I on the ways H, substantially as set forth.

Third. I claim the pulley *g*, with its appendages of the pawl *h* and ratchet wheel *r*, in connexion with the projection *i* and the dogs *f*, by means of the cords or chains *k*, substantially and in the manner and for the purpose described.

I do not claim the projection *i*, the dogs *f*, or the chains *k*, separately, as they are not new, and may be altered in their form in my mill, and so used in connexion with the pulley *g* and its appendages, which is my claim as above.

Fourth. I claim the entire arrangement of my mill, by which a series of carriages are brought forward on endless ways to an endless saw, each log upon its carriage being accurately set as it passes the projection *i*, and thereby securing accuracy, rapidity and efficiency, substantially in the manner and for the purposes set forth.

No. 16,894.—George F. Woolston, of Washington, D. C.—*Improved Circular Sawing Machine.*—Patent dated March 24, 1857.—Letters A A represent knives or cutters formed in the saw, and bent outwards in opposite directions sufficient to cut off a thin shaving at each revolution of the saw, thereby planing in the operation of sawing.

For the purpose of preventing the formation of ridges and producing a smoother surface, thin metallic guard plates, as represented by letters B, are placed near the saw, of such thickness that the outer surfaces of said plates are in exact line or plumb with the cutting edges of the planing cutters, the plates being between the saw and the material. These plates have an outward set at P P, to allow the cutters at the back of the saw to clear the wood.

Claim.—First. The application and use of guard plates, substantially in the manner and for the purposes described, in combination with knives or cutters formed in saws or inserted therein, and operating substantially in the manner specified.

Second. Substantially as described, the manner of applying the said plates, holding them firmly and so adjusting them as to prevent vibration of the saw.

No. 19,005.—E. H. De Witt, of Xenia, Ohio, assignor to Himself and Butler N. Strong, of Xenia, Ohio.—*Improved Circular Sawing Machine.*—Patent dated December 29, 1857.—The claim and engravings explain the nature of this invention.

The inventor says: I am aware that vertical and horizontal saws have been previously used, and also a combination of reciprocating and vertical saws have been used for the purpose described; I therefore do not claim the employment of a horizontal and vertical circular saw separately, or irrespective of their arrangement as shown.

I *claim* the construction of sawing machines in the manner described, viz: having one of the circular saws J arranged vertically, and the other circular saw H arranged horizontally, both saws cutting simultaneously, and being carried in adjustable frames C D; all as set forth for the purposes specified.

No. 16,326.—William Cady, of Eaton, Ohio.—*Improved Cross-cut Sawing Machine.*—Patent dated January 6, 1857.—Power being

applied to driving pulley G, on shaft B, a reciprocating motion is given to the saw H, and the log I is sawed the desired length. By depressing lever P the lever M, attached to it by cord N, is raised, and with it shaft P and saw H; thus the saw H can be raised or lowered without stopping the machine. The catch Q serves the purpose of olding the lever P in the required position.

The inventor says: I do not claim any one of the devices, separately considered.

But I *claim* the connecting rod D, vibrating lever E, bar F, lever M, provided and connected with the saw H, cord N, lever P, catch Q, and brake U, when arranged as described, for the purpose set forth.

No. 18,943.—George R. Moore, of Westford, Massachusetts, assignor to Himself and Charles G. Sargent, of Westford, Massachusetts.—*Improved Cross-cut Sawing Machine.*—Patent dated December 22, 1857.—The nature of this invention is described by the claim and engravings.

The inventor says: I *claim*, 1st. The peculiar method of hanging the inverted saw within its gate by means of the guide wheels S and block *r*, as set forth.

2d. I claim depressing the middle section of the horse in the manner and for the purpose described.

3d. I claim driving the saw by means of the segment O and straps N, in the manner and for the purpose specified.

4th. I claim uniting the ratchet-wheel *y* to its shaft, by means of a friction clutch, in the manner and for the purpose set forth.

No. 16,883.—Stephen Scotton, of Richmond, Indiana.—*Improved Portable Cross-cut Sawing Machine.*—Patent dated March 24, 1857.—The nature of this invention consists in placing a reciprocating saw upon a locomotive framework, the engine being placed at right angles to the line of motion of the carriage. The saw slides being borne in adjustable guides, which allow it to be used in a horizontal movement in felling trees, and in a perpendicular for logging off, together with two circular saws in swinging frames—the one swinging horizontally and the other perpendicularly.

Claim.—1st. The combination of the saw *o*, in swinging frame O, in combination with the locomotive carriage A A^1 B C D E F F G, &c., or equivalents, for the purposes set forth.

2d. The combination of saw *o* and frame O with the swinging saw table U and sliding bar V, or equivalents, for purposes set forth.

3d. Saw O^1 in horizontal swinging frame P, in combination with the locomotive carriage A A^1 B C D E F F G, &c., for purposes as set forth.

No. 17,686.—Matthew Ludwig, of Boston, Mass.—*Improved Sawing Machine for Felling Trees.*—Patent dated June 30, 1857.—The weight *m*, attached to cord *m*, keeps the saw *o* fed to its work; and by turning the shaft of the wheel E, a reciprocating circular motion is given to the vibrating radius J; and consequently the same motion is

communicated to the stock M and saw O, which will act horizontally against the tree P.

Claim.—The combination of the vibrating radius with the pitman I and saw stack M, for the purpose of guiding and rocking the saw circularly in its own plane, substantially as and for the purpose set forth.

No. 17,454.—STEPHEN SCOTTON, of Wayne county, Indiana.—*Improved Portable Cross-cut Sawing Machine.*—Patent dated June 2, 1857.—The saw frame I is attached to the end of a piston rod of a steam cylinder, and is operated by the action of said piston. In operation for cutting standing trees, the frame I is in a horizontal position, the dog Q is driven into the tree, and the saw K is made to rest on block R; and as the saw is operated the feeding of it is performed by catch bar *l* and propelling ratchet *j*, which operates cord *k*, one end of which is fastened to the saw block. The saw K is fastened to the block by means of a screw *n* passing through slot *o*, and can also be adjusted by this arrangement. For cutting logs, the frame I is turned to a vertical position, and operated in a similar manner, as described.

The inventor says: I do not claim attaching a saw or saw frame to the piston of a steam engine, or the use of a simple dog to attach the machine to a tree or log, for they are both embodied in a patent granted to S. R. Wilmot, August, 1855.

But I *claim*, 1st. The peculiar arrangement for feeding the saw to its work, and for changing the saw from a perpendicular to a horizontal position, substantially in the manner and for the purposes set forth.

2d. I claim a slotted saw K and screw bolt *h*, for the purposes indicated.

3d. I claim block R, in combination with dog Q, for the purposes set forth.

No. 17,601.—SAMUEL R. WILMOT, of Watertown, Conn., and REUBEN G. FAIRBANKS, of Brooklyn, N. Y.—*Improved Portable Steam Sawing Apparatus.*—Patent dated June 16, 1857.—In attaching this sawing apparatus to a log or tree, the hook M is lengthened or shortened by shifting pin *e* of lever M, and the apparatus is clamped fast, as represented in the engraving. The saw A is actuated by piston and piston rod of the steam cylinder C, and the feed of the saw is effected by turning pinion *j*, by means of crank J, causing the saw and cylinder to turn on the pivot Z of the heel block E.

Claim.—Attaching a portable steam sawing apparatus to the object to be sawed, by attaching apparatus at one side of the saw only, as set forth.

Also, the combination of an adjustable live clamping apparatus with the stock of a portable sawing apparatus, the several parts of the combination being constructed and combined substantially as set forth.

Also, combining the stock of a steam sawing apparatus with the mechanism for actuating the saws by means of feeding mechanism constructed and operating substantially as herein set forth, so as to

feed the saw into the object to be sawed, while the latter remains stationary.

Also, locking the saw, and the mechanism swinging therewith, to the stock, in the manner set forth; so that the parts of the machine may be rigidly connected with each other, so as to facilitate their removal from place to place.

Also, connecting the swinging members of a portable steam sawing apparatus with the stock at a point intermediate between the pivots and the extremity of the stock, as set forth.

No. 17,425.—JOHN J. CURTIS, of East Boston, Mass.—*Improved Scroll Sawing Machine.*—Patent dated June 2, 1857.—The stuff to be sawed is placed upon the table C, between the rollers *p* and Q, the roller *p* being made to bear upon the stuff with the requisite degree of pressure by turning wheel O. Motion being given to shaft I, a reciprocating motion is communicated to the saw E by crank wheel H and pitman G. The stuff is fed to the saw by wheel Q, which is operated by gearing *r*, rod *s*, endless screw s^1, and wheel *t;* and the operator, by turning table C, can cut the work to any required shape.

Claim.—First, the rotating bed or table C, arranged substantially as shown, and in such a relation to the saw that the bed or table may rotate around the cutting edge of the saw as a centre, for the purpose set forth.

I claim the feeding wheel Q, arranged and operated substantially as shown, when used in connexion with a rotating bed or table C, for the purpose specified.

No. 18,942.—A. C. MARTIN and MAHLAN M. WOMBAUGH, of Cincinnati, Ohio, assignors to A. C. MARTIN and R. ASHCRAFT, of Cincinnati, Ohio.—*Improved Method of Governing the Cut of Circular Sawing Machinery.*—Patent dated December 22, 1857.—This invention consists in attaching the saw-guides *d* to a forked or V-shaped bar E, which is fastened to a collar F, in the saw arbor C, and having the pillar-blocks B which receive the bearings of the arbor pivoted to the frame A, the bearings being fitted in the pillar-blocks in a peculiar way, and the outermost pillar-block and bearing being rendered adjustable longitudinally, whereby a longitudinal play or movement is allowed to the saw arbor, and consequently a lateral play is allowed to the saw D, so that it may conform or give to the spring of the log; and the "dip" is regulated, or more or less clearance can be given it, as may be required.

The inventors say: We *claim* the mandrel C, when working in governable circular joint swivel boxes B B, in combination with angular guide F^1 and lever E, when arranged substantially in the manner set forth for the purposes specified.

We also claim the side end or lateral swinging movement of plummer blocks B B, when arranged substantially as set forth.

No. 16,606.—EZEKIEL PAGE, of Platea, Pa.—*Improved Arrangement of Devices for Suspending and Adjusting Sticks in Sawing Machines.*—

Patent dated February 10, 1857.—The inventor says: I am aware that it has been attempted to saw clapboards by revolving a log on the centre over a circular saw, but this made straight parallel radial cuts, and would not answer for oars; and I am not aware that oars were ever sawed out radially from a log, which is the only way to prevent warping, and is a very important feature in their manufacture discovered by me.

I *claim* constructing the head and tail blocks of a saw mill, in which the log is so suspended as to rotate with the vertical and lateral adjustments, arranged and combined as set forth; so that the log may be sawed radially and tapering, for the purpose of getting out oars therefrom, as specified.

No. 18,269.—James H. Bachelder, of Rome, Michigan.—*Improved Method of Holding and Setting the Log in Circular Sawing Machines.*—Patent dated September 29, 1857.—The drawings and claim set forth fully the improvement.

The inventor says: I am aware that machines have been previously devised for accomplishing the same object as the one herein described. The arrangement of the two circular saws is not new—they have been previously used as shown, and for the same purpose. In view of these facts, therefore, I confine myself to the particular means employed for effecting the purpose set forth.

First. I *claim* setting the log D to the saws, or giving it its lateral movement at the termination of each stroke or movement of the carriage B by means of the screws C C, on which the nuts *g* on the uprights *i* work; the screw C being turned at the proper time by means of the belt *o*, which is made to act upon the wheel t^1 by means of the loop y^1 attached to lever a^2; the lever being actuated by the forked lever d^2 coming in contact with the projections *f* on the plates Q R, attached to beam A^1; the length of movement of the log being determined or regulated by the rack rod P, pawl *e*, arranged as shown, or any equivalent device.

Second. I claim securing the log D in the carriage B, or to the cross-piece *l*, supported therein by the uprights *i*, by means of the rods *n n o*, attached to the cross-piece *l*, by means of the plates *m* and rods *p*, having eccentrics *q* on them,—the eccentrics being in one end of the plates, and the rods *n n o* passing through the opposite ends, as shown and described.

No. 16,854.—Osborn E. Stephens, of McCall's Ferry, Pa.—*Improved Portable Reciprocating Circular Sawing Machines.*—Patent dated March 17, 1857.—The claim and engravings explain the nature of this invention.

The inventor says: I *claim* a saw arranged to traverse horizontally so as to cut a score in one side of the log to be sawed, and then moved perpendicularly so as to traverse horizontally in the opposite direction, to cut a score in the opposite side of the log, to correspond with and cut into the first score, and cut off a portion of the log, substantially as described.

I claim the devices, substantially such as are described, for changing

automatically or by hand the motion of the carriage which traverses the saw horizontally in each direction, for the purposes set forth.

I claim the devices, substantially such as are described, for changing automatically or by hand the motion of the carriage that traverses the saw perpendicularly, for the purposes set forth.

I also claim the latches arranged to fill the scores in the guide *e*, so as to let it slip by the locking lever *h*, as described.

No. 16,812.—M. B. Tidey, of Ithaca, New York.—*Improved Table-Gauge for Circular Sawing Machines.*—Patent dated March 10, 1857.—The object of this invention is to operate and render portable a guide in a desired connexion with circular saws for the purpose of gauging and sawing stuff to a desired width. The operation of the apparatus will be understood from the engravings.

Claim.—The construction of a portable saw gauge for the purpose and in the way substantially set forth.

No. 18,066.—Stephen Woodard, of New London, N. H.—*Improved Method of Clamping Logs in Cross-cut Sawing Machines.*—Patent dated August 25, 1857.—The wood B^3 to be sawed being placed upon the holders X, the wood is sawed by saw F, by turning crank A^2. The weight J is then pulled down and hooked into stud *n*, and the stick B^3 is moved endwise for another sawing; the weight J is then unkooked, letting down the saw F for another sawing, which lets also the toggle joints Z down, to hold the stick B^3 by their connexion with holders X.

Claim.—Holding the wood to be sawed by means of the described arrangement of holders X, acted upon by the toggle joints Z weighted at their centres, or an equivalent arrangement, essentially in the manner and for the purposes fully set forth.

No. 17,860.—Thomas J. Alexander, of Westerville, Ohio.—*Improved Feeding Arrangement for Sawing Machines.*—Patent dated July 28, 1857.—Rotary motion being imparted to pulley C by means of belts *d e*, the saw on shaft C is revolved, and rotary motion is given to the conical pulleys I and J. The wheels *m* and *w* of these pulleys can be brought in gear with the pulleys *o* or *r* by shifting the slide *l* to one or the other side by means of lever K. Thus the truck wheels S and *a* are caused to turn in one or the other direction, and will impart a corresponding sliding motion to the frame G and carriage A, thus effecting the feed of the saw.

Claim.—The combination and arrangement with a reciprocating feed-carriage A, as a means of operating the same to effect the reciprocating travel or feed, by propelling gear therein or connected therewith, operated by or from a main feed shaft C of the freely-sliding or self-adjusting pulley frame G, with its right and left hand belts *d e*, driven and communicating motion to the main feed-shaft C, essentially as set forth, for the purposes specified.

No. 16,454.—Samuel R. Smith, of Florence, Mass.—*Improved Method of Feeding Lumber laterally in Sawing Machines.*—Patent

dated January 20, 1857.—During the reciprocating, rectilinear movement of carriage R, the saw E will be caused to pass through the log. During the backward movement of carriage R, lever *l* will be forced against roller *m*. This will move the toggles *h i*, so as to cause them to move the slide bar *f*. This bar, in sliding backward, will so move cams *o p* on their axes as to be clutched to rack *n*, and produce a backward movement of said rack. Rack *n* will turn pinion *t*, which operates rack *u*, moving carriage V forward, and the log laterally. During the next forward movement of carriage R, the spring *g* will draw the slide bar *f* forward and release it from the catch mechanism T.

Claim.—The combination of mechanism by which the lateral adjustment of the log is effected, as described; such consisting of the spring *g*, the stationary bearing roller *m*, or its equivalent, the lever *l*, the toggles *n i*, the slide bar *f*, the catch mechanism T, the pinion *t*, and the rack or racks applied to the carriage V, substantially as described, the whole being arranged and operating together essentially as specified.

And I also claim making the carriage or head block V movable, independently of the ways or frame on which it is supported; and combining with said carriage and its movable rack a lever and pawl, or an equivalent device, whereby said carriage may be moved towards the saw by the hand of an attendant applied to the said lever.

No. 18,948.—D. B. Bartholomew, of Lancaster, Pa.—*Improved Gearing for Feed-rollers in Re-sawing Machines.*—Patent dated December 29, 1857.—In the engraving J represents cog gears, which combine the rollers G G, so that they operate unitedly. These gears are on the lower part of the shafts of the rollers. K represents the screw shaft; it is placed transversely in the frame, below the feed-rollers and gears J. L is the screw pinion, which gears into the worm or screw thread of said shaft. This pinion is on the lowest extremity of the shaft of the rear feed-roller G, as shown. M is a band leading from the screw shaft K to the pitman or crank shaft of the saw mill.

Claim.—The arrangement of a screw shaft K transversely and at right angles to the vertical adjustable rollers G G, when combined with the gearing J J J, substantially as and for the purposes set forth.

No. 17,626.—John Haw, of Old Church, Virginia.—*Improvement in Picker Sawing Machines.*—Patent dated June 23, 1857.—The nature of this invention will be understood by reference to the claim and engravings.

Claim.—As an improvement in picker saw mills, the overhanging of the saw between braced guides *d* and *e*, the space between which is adjustable by wedges *i i* and slotted braces *l* and *m*, operating as specified.

No. 17,629.—James G. Kennedy, of Cincinnati, Ohio.—*Improved Sawing Mill.*—Patent dated June 23, 1857.—Rotary motion being given to the driving shaft F of the machine, it is transmitted to the

working parts of the same in the usual manner. Motion is given to the ratchet wheel 29 and shaft 8 by means of the friction of the end of shaft 4 against the periphery of wheel 29, for the purpose of moving the log carriage *d* by means of cord 19, the latter passing around shaft 8; and for changing the motion of the carriage *d*, the head and foot blocks are provided with pins 20, which strike against the end of rod 15, and which will shift the clutch 11 in and out of gear with the pulleys 9 and 10 to suit the motion required, by means of bell crank lever 16 and shifter 12.

The inventor says: I do not claim any parts of the machinery composing the improvement when taken separately for the purposes set forth.

But I *claim* the arrangement of the several parts of machinery and saw employed in one frame, by which I am enabled to change and run the saw carriage in either direction for sawing both ways, or, if desired, saw in one direction, and run the carriage back, as usual, in the other direction without sawing; all as represented and for purposes specified.

No. 17,840.—Franklin B. Kendall, of Bath, Me.—*Improved Sawing Mill.*—Patent dated July 21, 1857.—The logs to be sawed are placed upon the carriages 2, and power being applied to shaft 5, motion is given to the saw sash 3 by means of cranks 6 and pitmans 8, while the feed motion of the carriage is effected by belt 10 driving pulley 11. The feed motion of pulleys 11 is regulated by means of the conical pulleys 23 and 15, shafts 14, and the eccentric gear 16 and 17, by which the greatest amount of feed is given to the carriages while the saws are rising.

The inventor says: I do not claim any of the several separate devices or their secondary combinations.

But I *claim* the general arrangement thereof, for the purposes shown and described.

No. 17,829.—William M. Ferry, jr., of Ferrysburg, Mich.—*Improved Sawing Mill.*—Patent dated July 21, 1857.—The collar K can be adjusted on frame H by means of set screws F and slots *g*, so that it, with the arbor J, may be adjusted as represented in dotted lines, and the saw thereby caused to have an inclination to cut towards the log while cutting cross-grain stuff.

Claim.—First. Arranging the saw arbor and all the parts bearing a close relation to the saw on a metal yoke K, and making said yoke capable of being adjusted so as to stand slightly out of parallel with the edge of the carriage, substantially as and for the purpose set forth.

Second. Constructing the saw spindle J with circular flanch *j*, and the common saw collar *h*, which surrounds the eye of the saw, with a T-shaped socket *i* of greater length than the flanch; so that the saw may have slight end play, independent of bearings, spindle, or gearing, substantially as set forth.

Third. The application, in the manner described, of the adjustable self-fastening trip 2 to a saw mill, which operates with a continuous rapid motion back and forth, for operation in combination with the

vibrating reversing stop W^2, substantially as and for the purpose set forth.

No. 16,725.—PHILANDER EGGLESTON, of Mobile, Ala.—*Improved Circular Sawing Mill.*—Patent dated March 3, 1857.—In this machine the saws may be set to the log, instead of the log to the saws. Figure 2 represents part of a top view. By having the carriage placed at the upper part of the framing, and the log suspended therefrom, a free space is left on the flooring for the attendants.

The inventor says: I do not claim separately the means employed for feeding the log to the saws and gigging back, for that is a well known device and in common use.

But I claim, first, suspending the log P to the carriages F F by means of the bars *n* and x^1, arranged substantially as shown, with the screw rods *z q* and shafts *u*, whereby the log may be firmly dogged or secured in proper position, and also adjusted or elevated or depressed to the desired position or height.

Second. I claim suspending the log P from the carriages F F, as shown, in any proper manner, in combination with the two saws E E, arranged as shown, and the feed movement composed of the shafts I J L, with their respective pulleys and belts, and the clutch *i*, operating as described.

No. 18,098.—GEORGE D. LUND, of Yonkers, N. Y.—*Improved Feed and Rigging Movement for Sawing Mills.*—Patent dated September 1, 1857.—When the boss T is thrown out from the cone G^1, the shaft P will be rotated from the cone G^1 through the medium of pinion *a*, wheel K, pinion N, wheel O, the pinion N being then in gear with wheel O. When it is desired to gig back the saw, the pinion N is thrown out of gear with the wheel O; by removing rod *e* off from the rod or bar *g*, the operator, by pulling the rod *j*, causes the larger end of the cone G^1 to bind sufficiently tight on boss T to rotate the wheel O and shaft P by means of pinion S.

The inventor says: I do not claim separately the cones F G^1, for they have been previously used; nor do I claim separately any of the parts shown.

But I *claim* the combination of the two cones F G^1, the conical hub or boss T, and pinion S, on the sleeve or collar R, placed on the sliding shaft G of the cone G^1, and the gearing *a*, K, N, O, arranged, as shown and described, for the purpose set forth.

No. 17,226.—DANIEL METHVEN and ANGUS A. METHVEN, of Wooster, Ohio.—*Improved Self-Reversing Feed Motion for Sawing Mills.*—Patent dated May 5, 1857.—The saw A is formed with teeth at both its edges, to enable it to operate in two different directions. The saw, being attached to cross-head F, is worked in the usual manner, and a pin on the head K slides in the groove *a*, which operates rods L, M, *e*, and pawls N; these pawls are set in opposite directions and act upon the ratchets S, whose teeth are also set in opposite directions; thus, when the saw has passed through the entire length of the log on the carriage P, the cord T^1 is pulled, and cord T lowered, bringing

the other pawl in action with the corresponding ratchet-wheel; and as the feed motion of the carriage P is effected by a pinion on shaft O, meshing in a rack of the carriage P, said motion is reversed, and the saw cuts through the length of the log in a reversed direction.

The inventors say: We do not claim any of the mentioned devices, separately considered.

But we *claim* the arrangement of the inclined planes *a a*, the connecting rods L, and rock shafts M, the pawls N, and the double ratched wheels S S, as specified, in combination with the double toothed saw, operating substantially in the manner and for the purpose set forth.

No. 16,624.—SIMON P. WINNE, of Albany, N. Y.—*Improved Machine for Re-sawing Lumber.*—Patent dated February 10, 1857.—The frames F F are attached, each frame to two of the horizontal slides G G, H H, which are allowed to slide freely between cleats J, I, J. By means of connexions K K the frames are made to move simultaneously in opposite directions. Thus the frames will always adjust the stuff A^1 placed between the guide rollers L L, so that the saw B will always cut through the centre of the stuff. Another piece of stuff B^1 may be simultaneously sawed into boards of more or less thickness by adjusting frame P the proper distance from the saw, and feeding said stuff B^1 through the guide rollers S O. The connecting rods *f* have shoulders *g g* fitting into slots in the lower ends of L L and the upper ends of O S, for the purpose of transmitting rotary motion to said rollers O S. The rollers L L are revolved by means of gearing N M.

Claim.—First, connecting the slides G H of the two roller frames F F by arms K K, as shown and described, for the purpose specified.

Second, connecting the two upper and outer rollers L in the frames F F to the two lower rollers O S in the frames P R, by means of the rods $f f^1$, arranged as shown; so that a rotary motion is communicated to the lower rollers from the upper ones, and the upper rollers allowed to have an independent lateral movement, as described.

No. 17,026.—JONATHAN CREAGER, of Cincinnati, O.—*Improved Machine for Sawing Shingles.*—Patent dated April 14, 1857.—The block from which the shingles are to be cut is secured to the tilting rest *f*, which after each cut is depressed alternately down to one of the adjustable stops *g* and g^1, whereby the taper of the shingle is effected. The circular saw *a* is mounted on a sliding frame $c\ c^1$, and is fed to the block by depressing treadle *d*.

Claim.—The combination of the bench *i*, rocking rest *f*, and adjustable stops $g\ g^1$, with circular saw fed transversely of the shingle by treadle, and cutting longitudinally, when arranged and operating in the manner substantially as and for the purposes described.

No. 18,354.—JESSE GILMAN, of Nashua, N. H.—*Improved Machine for Sawing Shingles.*—Patent dated October 6, 1857.—The object of this invention is to make a suitable provision to prevent the stuff, when it is sawed from the bolt, from binding or wedging against the saw. This object is attained by, and the invention therefore consists in,

having the guide attached to a roving arm which is connected with the carriage on which the "bolt" is placed; said arm being so arranged as to move the guide out free from the bolt when the stuff is sawed from it.

The inventor says: I *claim* attaching the adjustable guide F to the movable arm E, attached by a joint to the carriage C, and operated by the movement of the carriage through the medium of the arm G, lever J, and groove or guide H, substantially as and for the purpose set forth.

No. 18,967.—George Hall, of Morgantown, Va.—*Improved Machine for Sawing Shingles.*—Patent dated December 29, 1857.—The claim and engravings explain the nature of this invention.

The inventor says: I am aware that a rocking bed has been used for this purpose, but my horizontally moving carriage does not rock in any manner.

I *claim*, in combination with the horizontally reciprocating carriage C for carrying the bolt to the saw, the transverse carriage I, also moving on horizontal ways, but provided with ribs *n n n* so arranged as that the block or bolt dropping upon them shall be held in the proper position for alternately changing the point and butt of the shingle, and for giving the shingle the proper thickness and taper, as set forth.

No. 17,346.—Harvey R. Wolfe, of Louisville, Ky.—*Improved Device for allowing play to the Arbors of Circular Saws.*—Patent dated May 19, 1857.—The nature of this invention will be understood by reference to the claim and engravings.

The inventor says: I am aware that springs have been applied to saw mandrels or arbors in various ways, for the purpose of allowing the saw to have a lateral movement or play; and I therefore do not claim such movement in the abstract, or irrespective of the peculiar arrangement of the parts shown and described.

But I *claim* the bar or lever F, having an elastic and a stiff or rigid portion, and pivoted to the bar G, as shown; the elastic end *e* of the bar or lever F being connected with the saw arbor or shaft C, and the stiff or rigid part with the sliding guide *h* through the medium of the rod H and lever I; the above parts being arranged substantially as shown, whereby the bar or lever F performs the double function of spring and lever, the saw and guide being both moved laterally when necessary by actuating the bar or lever, and when the outer end of the bar or lever is secured or made permanent, the inner end or part serving as a spring to allow the saw an independent lateral play or movement.

No. 16,643.—A. P. Gross, of St. Louis, Missouri.—*Improved Device for allowing Circular Saws to play laterally, independently of their Shafts.*—Patent dated February 17, 1857.—Circular saws require some lateral play to cut well; this improvement consists in attaching the saw to a collar on one end of the same shaft, and so combining it with spiral springs as to allow it the said lateral play.

Claim.—The shaft A, in combination with the sleeve D and springs

m n, the saw F being attached to the sleeve D, and the shaft A secured in its bearing B, as shown, so as to prevent a longitudinal movement of the same; the whole being arranged as described for the purpose set forth.

No. 16,665.—WILLIAM S. REEDER, of St. Louis, Mo.—*Improved Device to allow Circular Saws end play, independently of the Driving Shaft.*—Patent dated February 17, 1857.—E is the pulley, C the saw; a collar F is attached to the end of shaft D, and a collar G to that of shaft B. From collar F project driving pins *i*, which pass through slots in collar G, and bear against friction rolls *j*, which latter have their bearings in said slots. Thus the saw shaft B is allowed to play endwise.

Claim.—The arrangement and combination of an additional driving shaft D with the shaft B that carries the saw, for the purpose described.

No. 17,521.—GARDNER R. SCRIVEN, of Philadelphia, Pennsylvania.—*Improved Method of Adjusting Circular Saws obliquely to their Shaft.*—Patent dated June 9, 1857.—By screwing the washers *e f g* and saws *l n* up to the fixed collar *b*, by operating screw nut *i* in such a manner that pin *h* passes through hole *t* of the collar *b*, the saws *l n* will be secured perpendicularly on saw shaft *k;* but when the pin *h* is slid further into the washers *f g*, and when said washers are turned to the right or left, and are pressed against the collar *b* by means of screw nut *i*, then the saws *l* and *n* will be secured on the shaft *k* in an oblique position, and each of the saws will cut out a groove which is wider than the thickness of its metal, leaving a tongue standing between the saws *l* and *n*.

The inventor says: I do not claim the use of oblique circular saws for cutting grooves, as such are well known.

Neither do I claim the employment of two bevelled washers between a fixed collar on the spindle and the circular saw; as that mode of adjustment presents disadvantages, as set forth.

But I *claim*, first, the combination of the stationary bevelled collar on the spindle with the single loose collar, having one bevelled face, and the sliding pin connecting said loose collar with the saw, the arrangement and operation being as set forth.

Second. The plane-faced collar *f*, fitting the spindle in such a manner as to be easily inclined at an angle with the spindle between two circular saws *b* and *n*, for cutting tongues and wide grooves in lumber, as described.

Third. The sliding pin *h* in the collar *g*, and sliding through the same into the fixed collar *b*, or through the saws *n* and into the collar *f*, (figure 2,) as the case may be, for the purposes herein stated.

No. 16,339.—JOSIAH B. POMROY, of Chicago, Illinois.—*Improved Method of Adjusting Circular Saws to any required dish.*—Patent dated January 6, 1857.—The nature of this invention will be understood by reference to the claim and engraving.

The inventor says: I am aware that triangular-shaped notches

have been formed around the inner periphery of a circular saw, and then the portions of the plate remaining between said notches have been expanded for the purpose of permanently dishing the saw, without dividing its outer periphery.

I *claim* combining the concave cheeks B B and set screws *d d* with a circular saw, which has a slit or slits extending outwards a short distance from its inner periphery, at the same time that the said saw has an undivided outer periphery; all substantially as represented and described, and for accomplishing the purpose set forth.

No. 17,861.—THOMAS J. ALEXANDER, of Westerville, Ohio.—*Improved Method of Driving Circular Saws.*—Patent dated July 28, 1857.—Motion being given to the pulley C, the belts *e f* are operated without the crossing of either belt, and both the saw-pulley B and counter-pulley C are encircled and pulled on by the belts on opposite sides, thus relieving both shafts *a* and *g* of one side pressure or friction.

Claim.—The combination and arrangement with the revolving saw or cutter, having either a fixed or reciprocating relationship or action in the path of its cut, of the freely sliding or self-adjusting loose pulley carrying frame F, made whole or divided, and rigid or self-stretching, with its loose pulleys D D^1, E E^1, right and left hand belts *e f*, and pulleys B C, of the saw and counter shafts, essentially as specified for operation together in the manner set forth.

No. 16,424.—G. F. S. WRIGHT, of Black Oak, South Carolina.—*Improved Method of Mounting and Guiding Circular Saws.*—Patent dated January 13, 1857.—The saw D is allowed a lateral movement towards the frame A, and is thereby enabled to conform to any lateral movement of the log; the pressure of the spring E keeps the shoulder *c* constantly against the bearing a^1. The plate I serves as a connexion between saw D and wedge G, and tends to keep both in line with each other.

Claim, 1st. The employment or use of the spring E, applied to the machine, as shown, in connexion with the shoulder C on the saw arbor B, for the purpose set forth.

2d. The guide I, arranged or connected with the saw D and rotating wedge G, as described, when used in connexion with the spring E, for the purpose specified.

No. 17,518.—GEORGE W. RODEBOY, of Milwaukie, Wisconsin.—*Improved Shield and Guide for Circular Saws.*—Patent dated June 9, 1857.—As the saw O cuts into the wood, the muley-head K, the lower end of which holds the guide pins *a*, can be raised or lowered by turning crank-shaft L, the muley-head sliding in circular grooves of the shield J. Thus the guide pins *a* can be retained close to the cutting point of the saw.

Claim.—1st. Suspending the upper half of a saw, which is arranged to hang over the log to be sawed, a stationary metallic shield J, for the purpose of supporting the muley-head, and serving as a guard to prevent injury to the operator, substantially as set forth.

2d. The peculiar manner of arranging the circular muley-head on the stationary elevated shield, whereby the guides are capable of being adjusted to any position desired without taking up any portion of the depth of the saw from the collar to the point of the teeth, and are always made to guide the saw just at and above the point of cutting, substantially as and for the purposes set forth.

3d. The springs *n n*, when arranged on the rising and falling muley-head and relatively to the saw, substantially as and for the purposes set forth.

No. 18,957.—CYRUS E. COOK, of Cambridge, Ohio.—*Improved Clamp for Setting Saws.*—Patent dated December 29, 1857.—This invention consists in having two V-shaped frames A A, connected by a joint spring *a*, each frame having a bar C and D attached to it, the outer ends of the frames being provided with screws *e*, and a metallic bed fitted to one of the bars, the edge of the bar being bevelled at different angles, and the bar so arranged that either edge may be adjusted to form the bed of the saw according to the required set to be given to its teeth.

Claim.—The two V-shaped frames A A, connected at one end by a hinge *a*, or its equivalent, and provided with the bars C D, the adjustable steel or metallic bar *b*, provided with bevelled edges and the bars or stops *h h*, the frames being brought together by the screws *e* and nuts *f*, the whole being arranged substantially as and for the purpose set forth.

No. 18,017.—PHILO MALTBY, of Dayton, Ohio.—*Improved Machine for Dressing Saws.*—Patent dated August 18, 1857.—The back edge of the saw plate is inserted within the groove B and is clamped to plate A; and by vibrating the lever L on its fulcrum M the tool carriage G is vibrated horizontally on the bar E by means of link O, and the tool H is caused to plane the teeth of the saw, the tool being fed in a vertical direction by means of pawl *k* acting on ratchet wheel I, and the latter operating screw X vertically, which thus raises or lowers carriage G. The drill R^2 can be operated either by turning crank T or by means of rack M and ratchet S.

Claim.—The described devices, or their equivalents, for clamping and holding the plate of the saw, in combination with the devices, or their equivalents, for holding, operating, and feeding the tool to plane the teeth of the saw, substantially as described.

And, in combination therewith, the described apparatus, or its equivalents, for operating and feeding the drill by power or motion derived or communicated from the planing apparatus, so as to drill the holes in the plate at the same time the teeth are planed.

No. 18,250.—ANSLEY C. SMITH and JOSEPH K. CREIGHTON, of East Birmingham, Pa —*Improved Machine for Filing and Setting Saws.*—Patent dated September 22, 1857.—In operating this machine, the saw D is placed between the strips or boards P P, and the saw adjusted at the proper height, so that its teeth will be between the face sides f^1 *of the* beds or anvils K K, and the files *n* allowed to act properly

upon or against them. The guides C are adjusted simultaneously by sliding the plate G and securing it at the proper point, so that each file may act upon its teeth at the proper angle; the lever B is then actuated back and forth by hand or other means. As the lever is operated, the files *n* are moved back and forth, and the teeth of the saw filed.

The inventors say: We are aware that several saw-filing and setting machines have been devised, and that files have been placed in reciprocating frames. We therefore do not claim broadly the employment or use of reciprocating files, irrespective of the arrangement shown.

Neither do we claim the setting device, irrespective of its construction, and also of its arrangement with the filing device.

We *claim* the combination of the filing, setting, and feeding device, when the whole is arranged to operate conjointly and automatically as shown, for the purpose set forth.

No. 17,774 —EMANUEL ANDREWS, of Elmira, N. Y.—*Improved Machines for Gauging and Filing Saws.*—Patent dated July 14, 1857.—To file and gauge the circular saw A, it is secured within the stirrup G, the set screw *d* screwing as the gauge, and the saw A can be secured and released by operating the cam lever H; in filing the teeth, the file is made to rest on the guide-roller K.

The inventor says: I am aware that adjustable clamps and rollers for supporting and pressing upon the file while acting upon the teeth of the saw have been used. Such I do not claim.

But I *claim* the adjustable gauge M, and guide-rollers K, arranged and operating substantially as set forth, by means of which the cutting angle or rake of the teeth shall be accurately gauged before filing, the rollers acting as stops to prevent the further cutting of the file when the proper point is attained.

I also claim the adjustable setting gauge, consisting of the movable jaws N and O, combined with the files *g g* or other cutting surfaces, which shall be equivalent in their operations, for the purpose of gauging the width of set which the saw is to receive, and also for dressing and finishing the points of the teeth smoothly and uniformly after being set, substantially in the manner set forth.

No. 17,110.—ALBERT S. NIPPES, of Lower Merion, Pa.—*Improvement in Grinding Saws.*—Patent dated April 21, 1857.—The nature of this invention will be understood by reference to the claim and engraving.

Claim.—First, placing the roller R within a frame S, which is pivoted to a bar T, which has its journals f^1 fitted in oblong slots or bearings j^1, substantially as shown; so that said roller may be elevated or raised up free from the saw, and also be adjusted more or less angularly with the face of the grindstone H, for the purpose set forth.

Second. Operating or moving the stone H and roller R towards and from the saw, by connecting the bearings *d* of the shaft of the stone and the journals f^1 of the bar T to the disk D and ratchet C, by means of the arms h^1 and the rods E, substantially as described.

No. 17,432.—MICHAEL KENNEDY, of Troy, N. Y.—*Improved Gauge Attachment for Hand Saws.*—Patent dated June 2, 1857.—The nature of this invention will be understood by reference to the claim and engraving.

Claim.—Making the gauge for regulating the depth of the saw cut with adjustable clamps C^1 C^1, which are formed to fit and gripe the saw back, and are attached to the arms of the gauge, independently of the set screws, by which the clamps are fastened to the saw back, as described, so that the gauge cannot only be fastened at any desired place upon the blade without requiring the blade or saw back to be perforated, but so that the gauge can also be removed from and replaced upon the saw without altering the set of the gauge, and so that the gauge can be adjusted upon the blade without loosening the clamps which hold the gauge to the saw.

No. 18,651.—JACOB VAUGHAN, of Exchangeville, Pa.—*Improved Method of Adjusting Band Saws to Circular Stocks.*—Patent dated November 17, 1857.—The claim and engravings explain the nature of this invention.

The inventor says: I am aware that sliding carriages have been used for feeding bolts to saws, and bolts have also been dogged substantially in the same way as that shown; band saws, or their equivalents, have also been previously used; but I am not aware that band saws have been secured to a rotating wheel in the manner shown and described.

I do not claim, therefore, the means employed for feeding the bolt to the saws. Nor do I claim band saws, irrespective of the means employed, for securing them to the wheel.

But I *claim* securing the saws E^1 G to the wheel C, by means of the expanding and contracting bands E H, whereby every part of the saws is firmly secured to said wheel, without perforating the saw or making use of intermediate bolts and screws, all as set forth.

No. 16,782.—EMANUEL ANDREWS, of Elmira, N. Y.—*Improved Machine for Grinding Saws.*—Patent dated March 10, 1857.—As the stones B B move independently of each other, a piece of sheet iron *g* can be secured to the mandrel of the saw, next to the thickest part, or where the saw is hard, and only one stone is made to operate on the saw, the other being moved away so as not to grind away the sheet iron plate; this plate, by passing between the roller and the saw, increases the pressure on the thickest or hardest part of the saw, without causing the thin or soft part to be ground.

Claim.—Connecting the saw C to the mandrel, by the ball joint *e;* for the purpose of adjusting it to the position of the rollers D D while being operated on by the stones B B, whether these act conjointly or independently, and to prevent straining the saw, as specified.

Second. The plate *g*, for the purpose of allowing to guide and grind a saw even in thickness, regardless of its hard or soft parts, thus perfectly balancing the saw, as set forth and described.

No. 16,421 —A. WINTER, of Pickens, S. C.—*Improved method of Hanging, Guiding, and Adjusting "Muley Saws."*—Patent dated January 13, 1857.—The nature of this invention will be understood by reference to the claim and engravings.

Claim.—First, the arrangement of the clamp guide posts B, in combination with the sliding head *c*, for securing it in any desired position, substantially as set forth.

Second, the method of constructing the sliding guide head C, with face guards D keyed on to starts S, framed into the sliding head, for the purpose of adjusting or renewing them in case of wear.

Third, the arrangement of the boxes K, in connexion with the cross-head J, for the purpose of adjusting the saw to give it the desired advance motion during its downward stroke.

Fourth, the arrangement of the guide posts B and upright G, in combination with the beam A and sill F, whereby the usual fender posts, &c., are dispensed with, all substantially as described.

No. 16,416.—CARLYLE WHIPPLE, of Lewiston, Maine.—*Improved method of Hanging and Operating Reciprocating Saws.*—Patent dated January 13, 1857.—As the shaft *h* is rotated, a reciprocating motion is imparted to saw D. The saw is strained in a perfect manner by elevating the bearings *a* of shaft B^1, by turning the set screws *c*.

The inventor says: I do not claim the two levers C C^1, to which the saw D is attached, separately, for they have been previously used.

I *claim* the lever C C^1, two or more, when the upper lever or levers are attached to an adjustable shaft B^1, and the levers driven by a crank pin *f*, having the roller *i j* fitted upon it and working within a slot *e* in the lower lever C, the saw D being attached to the end of the levers, the whole arranged as shown and described, for the purpose specified.

No. 18,547.—JOHN L. LAWTON, of Baltimore, Md.—*Improved method of Operating Scroll Saws.*—Patent dated November 3, 1857.—The nature of this invention consists in straining the saw B by means of two belts D D^1, one of which connects the upper end of the saw and the other the lower end to the opposite extremities of a distant double lever E, by the alternate movements of which the saw is operated; by which mode ample space is provided around the saw for the shaping and handling of all descriptions of work.

The inventor says: I *claim* the method of operating the saw by means of the belts and back levers, substantially as described.

No. 17,823.—WILLIAM H. HARRISON, of Philadelphia, Pa.—*Improved Mode of Cutting Tenons by two Circular Saws Oblique to Shaft.*—Patent dated July 14, 1857.—The narrowest space between the two saws F, which gives the thickness of the tongue to be cut, can be varied by changing the relative position of the two washers *g*.

The inventor says: Being well aware that one oblique circular saw, and the employment of two bevelled washers between a fixed collar and the saw, are claimed in the patent of Amos D. Highfield, (assigned to him and myself,) I wish it to be understood that I do not claim any such device in this application.

But I do *claim* the use of two circular saws upon the same shaft when their planes form an acute angle with each other, and made adjustable on their shaft by means substantially such as set forth.

No. 18,828.—STEPHEN R. TENNEY and ASA BENNETT, of Hubbardstown, Mass.—*Improved Shingle.*—Patent dated December 8, 1857.—A, in figures 1 and 2, represents a furnace which may be constructed in any proper manner; B is a hollow roller which is fitted in the upper part of the furnace, the periphery of said roller projecting a trifle through the top of the furnace. The top of the furnace is formed of two parts, *a a*, the outer ends of which are jointed to the upper part of the furnace, so that the inner ends may bear or rest upon the roller. C is a roller, the journals of which work in sliding bearings D, said bearings being fitted in grooved upright plates E at each side of the upper part of the furnace. Each bearing D is connected to a weighted lever F, and these levers have a tendency to press the roller C upon the roller B.

The roller B is heated to a proper degree by the fire in the furnace, and motion is given to it in any proper manner. The shingles G are passed between the rollers one at a time, and one surface, the under one, charred by the heated roller; the shingles are then inverted and again passed between the rollers and the opposite sides charred.

The inventor says: We do not broadly claim the preservation of wood by carbonization.

But we *claim* a carbonized shingle, made substantially as set forth.

No. 17,254.—WILLIAM BEVARD, of St. Louis, Mo.—*Improved Rotary Shingle-Cutter.*—Patent dated May 12, 1857.—The block R to be operated upon being placed upon table P, the operator, by pressing down lever N with his foot, brings the bar I to a vertical position, the weight on lever N forcing the griper T against the block, which thus holds it against the face of the rotating wheel B, while the knives F cut it in shingles, thus leaving the operator free into prepare another block while the preceeding one is running through the machine. By pressing down lever K, the bar I, by the action of weight O, is thrown in the position represented in the engraving, leaving the table P free for the reception of the next block. As the shingles are cut from the point to the butt, the splitting of the shingles is prevented by giving the knives F the curved shape as represented in the engraving.

Claim.—The combination of the described automatic feeding appatus with the rotating shingle machine described, and also the current knife as shown at F, for the purpose specified, when combined as described.

No. 16,546.—WILLIAM HUEY, of Columbia, Pa.—*Improved Shingle Machine.*—Patent dated February 3, 1857.—Figure 3 illustrates the operation of the knives, which, by means of the rollers R, are made to follow the bevel of the shingle S. The knives with their cylindrical cases, and the rollers, are all attached to one box, which latter is pressed downward by means of springs S.

Claim.—The particular method of adjusting the knives within a

cylindrical or other shaped case V, that they may be made to rise and fall according to the thickness of the shingle or board.

And secondly, attaching the sawing and planing machines in such a juxtaposition as to operate automatically as described, in the manner and for the purpose set forth.

No. 16,562.—WILLIAM A. WHITING.—*Improved Shingle Machine.*—Patent dated February 3, 1857.

The inventor says: By placing layers *e* of India rubber under the bearings *d* of the knife wheel *a*, or under the rest *c*, which supports the blocks whilst they are being converted into shingles, the shingles cut therefrom are perfectly sound, the yielding of the block as the knives strike it having the effect of preventing the yielding of the fibres before the edge of the knife and their consequent partial separation from each other.

Claim.—Giving an elastic bearing to its rest *c*, or to the bearing boxes of the knife wheel, or to the equivalents thereof, for the purposes described.

No. 16,742.—H. D. MCGEORGE, of Morgantown, Va.—*Improved Shingle Machine.*—Patent dated March 3, 1857.—The bolt is placed upon bed F; this bed is pivoted in two pillar blocks G G, made adjustable in the frame of the table by means of set screws *a a;* so that the bed may be raised or lowered to give the desired thickness to the shingle, whilst it can be rocked on its pivots by means of arm H, link I, and handle J, to form the butts and points alternately from opposite ends of the bolt.

Claim.—In combination with the saw and carriage, the rocking bed F for determining and adjusting the bolt to the thickness and taper of the shingle to be sawed, substantially as set forth.

No. 16,964.—JOHN L. BROWN, of Indianapolis, Ind.—*Improved Shingle Machine.*—Patent dated April 7, 1857.—The block to be cut is placed between the rods I I; power being applied to the pulley A, the shaft B is revolved, giving a reciprocating motion to the knife sash E, and one-half of a revolution to the wheel M; the eccentric N alternately raises and lowers the end of the lever O, sliding the bolt Q through the knife sash E, changing the oscillating table R at the time that the knife F is being drawn back after cutting the shingle.

Claim.—The construction of a self-feeding shingle machine by the arrangement and combination of the wheel L upon the shaft B, the wheel M, the eccentric N, the lever O, the bolt Q, and the oscillating table R, when arranged and operated as set forth.

No. 17,104.—G. H. MALLARY, of New York, N.Y.—*Improved Shingle Machine.*—Patent dated April 21, 1857.—As the saw *b* cuts the shingle from the bolt on carriage *l*, the rotating planer *c* planes the sides of the shingle; the planer *c* is pressed to the shingle by having the arm *f* of its vibrating frame *d* guided by means of a projection on the vibrating carriage bed *i*. The saw *b* having performed the cut of the shingle, the frame *h* is run back on its ways *a*, bringing the

pawls k^1 in contact with cams k, which latter are turned, and each of which in its turn operates the vibrating plate i so as to vibrate it to one or the other side, thus producing the taper of the shingle.

The inventor says: I do not claim any of the separate parts composing this machine when employed by themselves.

But I *claim* the arrangement of the several devices described, by which the bolt is sawed into shingles and planed, as set forth, the whole being combined and constructed substantially as described.

No. 17,347.—C. M. Young, of Sinclearville, N. Y.—*Improved Shingle Machine.*—Patent dated May 19, 1857.—A reciprocating motion being given to the saw frame B, rotary motion is communicated to shaft E, in consequence of the pin d of the wheel D being fitted in the slot c, in the lower part of the gate. As the gate B is moved up and down, the sash M, which contains the saws N, has a lateral reciprocating motion given it in consequence of the bars b^* fitting in the grooves in the stiles a^*; and these saws being placed adjoining the back side of the knife C will, as the gate descends, cut a kerf longitudinally in the butt end of each shingle.

The inventor says: I do not claim the movement of the bolt, or the manner in which it (the bolt) is presented to the knife, irrespective of the means employed for effecting the purpose.

But I *claim* operating or giving the necessary feed motion to the block H and bolt L, by means of the laterally reciprocating bar G, actuated by the eccentric grooves n^1 in the wheels f, the bar G vibrating the block H, through the medium of the bar I, the block H being provided with pawls p^1, which catch into the racks p in the frame A, and the whole arranged as described.

Also, the saws N N placed in the frame of sash M, which is secured at the back of the gate B, and operated from the bar G as described for the purpose specified.

Further, the bar G when arranged as shown, so as to be driven or operated from the gate B, whereby the several parts of the machine are all made to work automatically as described.

No. 17,378.—William A. Jarratt, of Patonsville, Tenn.—*Improved Shingle Machine.*—Patent dated May 26, 1857.—As the recess R of the carriage H passes under the feeder B, a bolt is discharged into said recess; and when the carriage recedes, the bars c taking hold of the cams b on studs a pull down the knife I to cut the bolt to the proper thickness. As the shingle leaves the knife, having one side shaved, the knife is released, and the dog d, running upon arm e, depresses lever g, which pulls cord h and raises apron C, throwing off the shavings; while at the same time the bar m comes in contact with stop F, and, pulling down cord y, causes shaft o to turn and the arms x to turn the shingle over into recess R^1; at the next operation a new bolt is discharged into recess R and shaved on one side, while the shingle in recess R^1 is shaved the second time, thus finishing it.

The inventor says: I do not claim the mechanism for reversing and throwing out the shingles, as I am aware that mechanisms equivalent thereto have been before employed.

I *claim*, 1st. Elevating and depressing the knife L, and retaining the same in the required position by means of the bars C on the bottom of the carriage operating upon the cams *b* or studs *a a*, substantially as described.

2d. The automatic apron *c* operating substantially as described, whereby the shavings are all taken from the shingles and knife and thrown from the machine, the apron returning sucessively to a horizontal position to receive the shavings, as and for the purposes set forth.

No. 17,906.—ELBRIDGE WEBBER, of Gardiner, Me.—*Improved Shingle Machine.*—Patent dated July 28, 1857.—The bolt is held between the dogs 6, attached to the pinions 7, at the extremities of levers 7^1; one of these levers is slotted and the other has a pin entering in the slot, so that both are moved by power applied to lever-handle H. The pinions mesh in racks in the floor of the head-block 5^1 and thus move the dogs 6 as desired and firmly hold the bolt when inserted between the teeth of the dogs. The saw X is driven by power applied to pulley X^1 while motion is communicated to shaft *n*. As the carriage *z* is drawn back by weight w^1 levers *k* and 14 press against their respective benches b^1 b^2, and moving the ratchets k^2 and 14^1 feed the head-block 5^1 forward, and give the necessary vibration to frame 2^1 and through it to head-block 5^1. The striking of the carriage against lever *m* closes the clutch F^1, and produces the forward movement of the carriage a sufficient distance for the length of the bolt.

Claim.—1st. The combination of the vibrating frame 2 with the obliquely slotted slide piece 11 and the cam wheel 12, arranged and operating substantially as and for the purpose set forth.

2d. The relative adjustment of ratchet O and sheave g^1 substantially as and for the purpose specified.

3d. The arrangement of the pinions 7 7 with levers 7^1 7^1 and dogs 6 6, as set forth.

No. 18,512.—SIMEON MARSHALL, of Philadelphia, Pa.—*Improved Shingle Machine.*—Patent dated October 27, 1857.—This invention relates to the construction of shingle machines adapted to the purpose of splitting and dressing shingles, whereby the respective parts are readily adjusted to more different thicknesses, shapes, or forms than other machines now in use.

In slots *y y* are placed the riving knife arms *f f* connecting the knife to the driver. The ends of those arms are placed in the slots, and are so formed, as seen by the section, fig. 3, that by placing them in those slots and securing the knife in its place to the opposite ends, a positive connexion is formed with the driving plate, at the same time giving the knife that required freedom to rise or fall to suit the irregularities of the timber in passing through it.

The inventor says: 1st. I *claim* the slots *y y y y* in the driving plate, with the peculiar formed arms *f f*, combined and connected substantially as and for the purpose specified.

2d. I *claim* the general arrangement of parts operating in the manner described and for the purposes set forth.

No. 18,681.—JAMES CRARY, of Kittaning, Pa.—*Improved Shingle Machine.*—Patent dated November 24, 1857.—This invention relates to an improved machine for froeing and shaving shingles in taper form, and consists in the employment or use of reciprocating froes arranged in sets, in the use of a pair of tapering or shaping knives, and in the use of a vibrating feed board, arranged and operated so that shingles are rived and froed from the block and shaved or cut in taper form.

The inventor says: I *claim*, 1st. The use of the sliding side pieces L L with converging slots C C, in combination with the upright grooves *d* in the frame in which the wrists of the shaving knives are inserted, for the purpose of effecting the gradual approximation of the shaving knives in giving the proper taper to the shingles.

Second. The combination of lever P with its pin R, the projecting cam S, and cam on the frame L, for the purpose of communicating the requisite relative motion to the vibrating feed board O, the driver N, and frame L, whereby one bolt only at a time of the three riven by the froes is driven outwards and forced through the shaving knives, no matter how short or thin the bolt may have been froed.

No. 16,911.—EDWIN EDWARDS, of Oneida Lake, N. Y.—*Improved Rotary Shingle Machine.*—Patent dated March 31, 1857.—The inner end of the bolt F bears against the bands G H, and is placed angularly to the cutters D and D^1, the bands G and H serving as gauges; and as the inner end of the bolt is kept firmly pressed against said bands, the bolt will be shifted as the wheel B rotates, the two cutters D and D^1 acting upon bolt F alternately and cutting the shingles from the bolt in taper form, the butts and thin ends of the shingles being cut alternately from each side of the bolt.

The inventor says: I am aware that devices have been employed for shifting the position of the bolt at each cut of the knives, so that the shingles can be cut in taper form and the butts cut alternately from each side of the bolt. But the devices hitherto employed have been complicated, expensive to apply to the machine, and liable to get out of repair.

I *claim* the employment or use of the adjustable annular gauges G H, formed each of two parts *b c d e*, and applied to the wheel B as shown and described, for the purpose set forth.

No. 17,907.—WILLIAM WOOD, of Westport, Connecticut.—*Improved Method of Feeding the Bolt in Shingle Machines.*—Patent dated July 28, 1857.—By the operation of the parts described in the claim, the toothed portion of disk I will gear alternately into the pinions F, and the screws H will be actuated alternately, and the bar G and bolt attached to it will be fed obliquely towards the knife frame D, which by its up and downward motion operates lever E.

The inventor says: I am aware that in shingle machines of this description the bolt has been previously fed obliquely forward, the

ends of the bolt being actuated or moved alternately; and I therefore do not claim in the abstract, or irrespective of the means employed for effecting the purpose, such movement of the bolt.

I *claim*, first. The employment or use of two screws, H H, actuated alternately from the knife frame D through the medium of the lever E, rod K, arm *n* of the sleeve or collar J, disk *l*, provided with ratchet-shaped projection *m* and teeth or cogs *i*, and the plate M, the whole being arranged substantially as and for the purpose set forth.

I further claim the plate M, when arranged and applied to the bar G substantially as shown, so that it may be readily disengaged from the screws when desired for the purpose specified.

No. 18,679.—Elisha K. Collins, of Cambridge, Massachusetts.—*Improved Machine for Cutting Shingles from the Bolt.*—Patent dated November 24, 1857.—By turning the wheel *c*, the two bars E E with the knives G G will be moved; and if the direction of the movement of said wheel be reversed each time the knives reach the end of the bolt, a reciprocating movement will be given to the knives, and a slab, stave, or stick will be cut from two opposite sides of the bolt or log at each stroke by turning the screw rods F F.

Claim.—The combination of the two screw shafts D D, E E, and knives G G, arranged relatively with each other, and with the bolt C, substantially as and for the purpose set forth.

No. 18,222.—James E. Young, of Augusta, Maine.—*Improved Method of Manufacturing Shingles.*—Patent dated September 15, 1857.—The bolt having been secured by clamps M, motion is communicated to saw shaft C and saw D which cuts the shingles from the bolt. When the carriage I arrives near the end of frame A, the bar K strikes against stop i^1, and drives the wedges O under the part *k* of the carriage and tilts it, vibrating the shingle bolt on its centre, whereby the shingles are cut from the bolt in alternate tapers.

Claim.—Vibrating the shingle bolt about an axis lying in or near the plane of the cut, and equally distant from each end of the bolt.

Second, the sliding rod K and wedges O, constructed and operating in the manner substantially as set forth.

No. 18,207.—Samuel Lord, of Perry, Georgia.—*Improved Spoke Machine.*—Patent dated September 15, 1857.—The stuff M being centred in the frame H, and the carriage B being so adjusted that the saw C will be at the butt end of the spoke, a rotating motion is given, the saw C, a travelling motion to carriage B, and a rotating motion to the stuff M; the rack *x* as the carriage moves operates wheel W. As the stuff rotates, the frame H is vibrated in consequence of the square portion *o* resting upon the plate *m* on lever V^1, and the butt of the spoke will be cut square by saw C. The lever V^1 now rests, when the most depressed part of cam *s* and cam *r* commences to raise lever V, so that its plate u^1 will bear against the elliptical portion *p* of the boss *u*, and thus the elliptical portion will vibrate frame H; and as said portion *p* is gradually raised by cam *r*, the form of the spoke transversely gradually increases to the point W.

The inventor says: I do not claim separately and apart from the arrangement shown any of the parts described.

But I *claim* the vibrating frame H operated as shown, and arranged with the carriage B and saw C specifically as described, so as to operate conjointly as and for the purpose set forth.

No. 18,680.—GEORGE W. COOKE, of Springfield, N. J.—*Improved Spoke Machine.*—Patent dated November 24, 1857.—In this invention rotary cutters are employed, and the work or article to be planed has a horizontal and longitudinal action; the work only passes through the machine once to complete the same, the cutters acting with a lateral and a circular movement, cutting into it to the full depth necessary to reduce it, and every revolution of the cutters finishing a portion of the surface of the work.

Claim.—The inventor says: I would state that I do not claim the tenoning part of the machine.

But I claim the planing of spokes with rotary cutters, whose surface or circumference is divided by grooves, the edges thereby being in sections or teeth, the same acting alternately on the work, in combination with lever F, springs K, and cog screws I I, for the purpose of producing the lateral and oblique movements of the cutters, substantially as described.

No. 17,111.—MANLEY PACKARD, of North Bridgewater, Mass.—*Improved Method of Adjusting and Holding the Knives of Spoke Shaves.*—Patent dated April 21, 1857.—By screwing the screw D into the wood of the stock A, the bow spring C will have its ends forced against the starts F of the knife B, so as to hold them firmly in place; an abutment of metal c^1 being placed against each start, and fastened in the stock.

Claim.—I do not claim applying either a wedge or a clamp screw to each start, in order to keep it in place in the stock.

But I claim the described new arrangement of the clamp screw and bow spring with respect to handle and starts of the knife or cutter, and so as to operate therewith substantially as described.

No. 16,532.—JOHN J. CROY, of Caledonia, Mo —*Improved Tool for Tenoning Spokes.*—Patent dated February 3, 1857 —The inventor says: I do not claim the use of a screw to hold the spoke against the interior of a tube or other surface.

Neither do I claim broadly the use of a revolving cutter head to cut tenons upon spokes, the spoke being held stationary.

Neither do I claim any portion of my device, as described, which is seen in John McCune's patent of June 16, 1847, or any part which exists in any other machine or instrument for cutting spokes.

But I *claim*, first, the employment of a tube A for holding the spoke while the tenon is being cut.

Second, the combination of an adjustable end piece or bed C with the tube A.

Third, the employment of an adjustable clamp cutter head F F^1, all the parts being constructed, arranged, and operating as set forth.

No. 17,106.—ALEXANDER MCKENZIE, of Boston, Mass.—*Improvement in Combined Square, Mitre Square, and Bevel.*—Patent dated April 21, 1857.—When this instrument is to be used as a mitre square, the arm C is turned on its pivot *a* until it comes in line with the face E; the position of arm C can be adjusted by means of pin *b* on said arm sliding in a graduated circular groove *c*.

Claim.—The described arrangement of the try square, the mitre, and the bevel blade, the latter being hung so as to project up on the opposite side of the stock from the blade, and so as to form, when set at an angle of forty-five degrees, a continuation of the mitre head, as set forth.

No. 16,857.—HERMAN WHIPPLE, of Shaftsbury, Vt.—*Improvement in Machines for Graduating Carpenter's Squares.*—Patent dated March 17, 1857.—The nature of this invention is shown by the claim and engravings.

Claim.—The inventor says: I claim, first, the scale index *m*, mounted upon the carriage B, and regulating the extent of motion given to said carriage from the truck *v*, and pusher point, whereby the length of the division mark is determined, and the cut made from the edge of the square, substantially as specified.

Second. I claim the arrangement of the rack *r*, lever *k*, and its actuating cam or pin, pawl *y*, rod *n*, and weight *x*, or its equivalent, for moving and adjust the index *m*, to be acted on by the pusher *v*, substantially as specified.

Third. I claim arranging the graver stocks *g* within the carriage B, substantially in the manner and for the purposes specified, when said graver stocks are governed by the levers L, adjusting rail *h*, and springs and rods S, or equivalents, for pressing down the gravers in cutting, and thus lifting the same up off the square while returning, as specified.

Fourth. I claim the arrangement of the scroll cam D, anvil or bed *c*, rod *a*, lever *b*, latch *i*, inclined wedge *f*, and clutch or friction lever *p*, for moving said bed *c* and its square endwise the required integral part between each stroke of the gravers, and then stopping the machine when the divisions are completed, substantially as specified.

Fifth. I claim the manner of securing the gravers *e* in place, and bringing them to the exact position in the stocks *g* by means of the mortise bolt 5, constructed and operating substantially as and for the purposes specified.

I do not claim regulating the extent of motion given to the graver stocks in drawing back by means of cams, as these have been used; it being understood that I do not claim a mortise bolt to secure a bar or tool, as this has before been used.

But I am not aware of any mortise bolt having before been constructed with the mortise for the tool eccentric, or one side of the mortise partially removed, so that the flat side of the graver is pressed to the side of the mortise in the graver stock, by the turning of said mortise bolt, and brings the same correctly to its position, irrespective of the thickness of the graver itself.

No. 16,817.—HERMAN WHIPPLE, of Shaftsbury, Vt —*Improvement in Machines for Stamping Figures in Carpenter's Squares.*—Patent dated March 10, 1857.—The square is confined to the face of anvil A, by an eccentric clasp or otherwise; the hand wheel *h*, is turned to bring the end of the blank line on the square directly opposite the chase containing the figures to be impressed. The chase which stands on the side of the frame, is now turned down on to the face of the square in the right place, being directed by the slot at the top of the chase; which is slipped on to the proper guide pin *d*. The treadle *t* is then pressed down, which raises the long end of the lever S, bringing down the short end and pressing it on to the lower edge of the groove *g*, by which that end of the anvil A is raised and pressed against the chase, and the long lever *m*, being attached to the lever *a* by the shackle bar *n*, the pin *e*, moving in the spiral groove *v*, turns the bolt y^1, and also the clamp *z*, which takes hold of the top of the bolt *y*, when the end of lever *m* presses down the cross-bar *x*, carrying with it the bolts *y* and y^1, pressing the clamp on to the top of the chase and confining it there for stamping, when each of the figures are struck with a hammer, to make the desired impression. The pressure is now taken from the treadle, the pin *e*, in its way up, turns back the bolt y^1 and clamp *z*, and the chase is turned back against the rail R.

Claim —First. The arrangement of a series of chase bars, jointed at one side of the machine, when combined with the anvil sustaining the square, and with the hand wheel *h*, rack or racks *j*, and pawl *i*, for regulating the relative positions of the anvil and chase bars, substantially as and for the purposes specified.

Second. I claim the arrangement of the levers *s a*, and *m*, bolt *y* and y^1, bars *z* and *x*, and slot *v*, and pin *e*, for the purposes and substantially as specified, whereby the one motion of the lever *a* (by the treadle *t*) first turns the bar *z* around to confine the chase bar C, and then gives the requisite compression of the chase bar at both ends on to the square or plate on the anvil, to retain the same firmly, while the chases are being separately struck into said square, as specified.

No. 17,130.—HENRY L. MCNISH, of Lowell, Mass., assignor to Himself and DAVID C. BUTLER, of the same place.—*Improved Stave Machine* —Patent dated April 21, 1857.—The stave is fed to the machine by means of the pressure rollers I, and passes between the horizontal cutters D and D^1, which serve to plane the staves on the two flat sides. The edges of the staves are planed by means of the cutters R and R^1, which cut the bevel and bulge of the stave at the same operation. The lever N, having its fulcrum at O, is operated by means of cam M; and the upper end of lever N is enlarged, and is formed with two oblique grooves *e*, which serve to adjust the position of the connexions P, which hold and operate the slide bearings 2, which form the bearings for the upper part of the vertical shafts R. Thus, by adjusting the connexions P nearer to the fulcrum O, a straighter bulge will be obtained. The bevel of the staves can be adjusted by raising or lowering the bracket V by means of the set screws *z*.

Claim.—The angular guides *e* upon the lever N, in combination with the connexions P P and concomitant parts for adjusting the side cutters R^1 R^1, to dress staves of different widths, and at the same time preserving the proportion between the bilge and the width of the stave, as set forth.

I also claim the V guide e^1 on the bed plate for the purpose of guiding the staves in a direct line through the machine, as set forth.

No. 16,746.—ERASTUS M. PITMAN, of Warren county, Va.—*Improved Machine for Bevelling and Jointing Staves.*—Patent dated March 3, 1857.—The plane A is set in motion between ways B B^1 by means of a pitman. A bunch of staves is placed between the carriage D and clamp C, and is fastened by means of cam F. The carriage is then moved down the ways E E^1 until the staves are sufficiently jointed; the carriage is then again moved up the inclined ways and is let drop to the position represented by dotted lines in figure 2, when the staves are turned and operated in the same manner as before, which completes them.

The inventor says: I do not claim the reciprocating plane having reversed bits, or the manner of its motion.

But I *claim* the combination of the reciprocating plane A, having reversed bits *c* c^1, and the motion referred to, and the carriage D with the inclined ways E E^1, constructed, arranged, and operated in the manner and for the purposes shown and described.

No. 18,123.—HENRY L. MCNISH, of Lowell, Mass., assignor to DAVID C. BUTLER and HENRY L. MCNISH, aforesaid.—*Improved Machine for Crozing and Chamfering Staves.*—Patent dated September 1, 1857.—The stave to be operated upon is placed upon bed I, between the clamps J, which hold it tightly and as the machine is set in motion, the clamps J are started to carry the stave over the cutters on head D, and the catches *j* and *k* first strike the stave and bring it square upon the bed J; the pins *d* then slide down the groove *l*, and bring the spring jaws *m* down upon the stave and hold it firmly while it is being crozed. After the stave has passed the cutters, the pins *d* pass through the groove *n*, and, pushing the spring *p* aside, pass the outside of the guides and beyond the ends of the springs, thus releasing the stave and allowing it to fall, the arms P guiding it clear of the machine.

Claim.—The self-opening and closing clamp described, or its equivalent, so geared to other parts of the machine as to operate periodically corresponding with the motion of the feed-rollers, as set forth.

Also, making the clamps adjustable to croze staves of barrels of different diameters, as set forth.

No. 17,871.—ELISHA K. COLLINS, of Cambridge, Mass.—*Improved Method of Sawing Staves from the Bolt and Dressing their Edges simultaneously.*—Patent dated July 28, 1857.—The bolt K is sawed out to the required size and clamped to the bar a^1, the outer edge of the bolt projecting through the frame a^1; motion is given to the band saw F by means of pitman *g* actuated by eccentric *i*. The bed I is also moved

by the endless chain C, which is actuated by the gearing *j k m n*; as the bolt passes the band saw F, the staves are sawed therefrom, the bolt running past the saw in a curved form corresponding to the form of the bars *a*, and the staves will consequently be sawed from the bolt in proper curved form; and just before the bolt reaches the saw its side passes between the arms *r*, and the bolt will be bevelled by the rotating cutter *v*; the staves therefore are jointed just previous to being cut, and the upper and lower edges of the frame b^1 are made of a rounded form, so that the staves will be cut of taper form so as to allow for the bilge of the casks.

The inventor says: I do not claim the employment or use of a band saw separately considered, or irrespective of the arrangement shown.

But I *claim* the band saw or saws F, the endless chain C, which gives a continuous feed motion to one or more beds or plates I, attached curved bars $a\ a^1$, the rotating cutters *v v*, the racks *f f*, and the gearing $d\ d\ e^1$, and screws c^1 connected with the bar a^1, when they are arranged and combined to operate conjointly, as shown, for for the purpose of sawing, jointing, and dressing staves at one operation, as set forth.

No. 18,088.—Peter Deal, of Amsterdam, N. Y., and James Greenman, of Northampton. N. Y.—*Improved Machine for Sawing Staves.*—Patent dated September 1, 1857.—The stave to be sawed is placed upon the table *h* between the guide *i* and the inner periphery of cylinder B; and rotary motion being given to said cylinder, the teeth on its front edge cut out the stave, the blank being guided during the feeding operation by carriage D, which slides on the curved track C, and the finished stave is discharged at the rear end of cylinder B.

Claim.—First. The combined method of supporting and driving cylindrical saws from their periphery, in the manner and for the purpose described.

Second. The arrangement on the interior of a cylindrical saw of a supporting table, and an adjustable gauge or guide, as described, by which the thickness of the stave is guaged, and it is guided during its passage through the saws, and one stave is prevented from passing the other, and jamming against and stopping the saws, or throwing the front stave off the side of the table on the bottom of the saws.

Third. The arrangement of a guard plate on the interior of a cylindrical saw, as described, for the purpose of preventing the sawdust and chips being thrown into the kerf of the stave.

Fourth. The method of diminishing the pressure of the curved surface of the stock against the periphery of a cylindrical saw, by pivoting the track on which the carriage holding the stock traverses, so that the pressure of the forward end of the stock will throw the track outward, and thus prevent the saw from binding in the kerf.

No. 16,849.—Valentine Munck, of Carrolton, La.—*Improved Machine for Planing Tapering Staves.*—Patent dated March 17, 1857.—By this invention the lumber is carried under the face of the cutters by the traversing bed, the groove and tongue connexion shown at m^3 causing the cutter-head bearings to rise with the inclination of the table

n^2, and thereby preserve the same relative position of said table and the edges of the cutters; the inclination of the table n^2 regulates the taper of the lumber operated upon.

Claim.—The adjustable table n and n^2, and making said table guide the cutting head t, substantially as and for the purposes set forth.

I also claim, in combination with the table n and n^2 and cutting head t, the angular side cutting-heads w^2 to secure from the variation of the table n^2 tapered planing on the edges of the lumber, substantially as specified.

No. 17,946.—JOHN TRAHIN and CHARLES VOEBEL, of New Orleans, La.—*Improved Machine for Bevelling Staves, &c.*—Patent dated August 4, 1857.—The stave to be jointed is placed upon the bed D and secured to it by means of the clamp D. Motion being given to the cutter-heads P by means of pulleys S, the cutters are made to operate upon the edges of the staves; the cutter-heads P can be adjusted horizontally by operating set-screws Q; they can also be adjusted circularly by means of the circular slots in the plates C. The stave is fed to the cutters by turning crank N, when the pinion or shaft M will operate rack G and bed O.

The inventors say: We do not claim separately any essential features in the machine described, but merely their specific arrangement, as shown and described for the purposes set forth.

No. 17,816.—MELYN WEATHERINGTON, of Springfield, O.—*Improved Method of Adjusting Round Tenon Cutter to certain Fixed Sizes.*—Patent dated July 14, 1857.—The rings, F having the aperture a of different sizes to suit the different diameters of the tenons to be cut, are placed within the disk A, and the cutter blade c is then placed on the ring and is secured with the same to the disk A by means of screw-bolt e. The cutter c can be adjusted to take a deeper or shallower cut by operating set screw i, fig. 3.

The inventor says: I do not claim boring round tenons, as this is a very common device.

But I *claim* the combined use of the uncut counter-sunk disk and removable rings, and the bit adjustable thereto; for the purpose of making an adjustable hollow auger, capable of boring tenons of various sizes, without splitting or dividing the stock, substantially as described.

No. 17,219.—DAVID HODGES, of Suffolk, Va.—*Improved Adjustable Bed and Gauge to Regulate Tenoning.*—Patent dated May 5, 1857.—The tenon being gauged on a piece of stuff E, it is secured on bed a by means of set screws g, and the shoulder on the upper side is cut with the ordinary plane used for this purpose; the plane being guided by guide c^1. The bed a is then turned on the hinges h so as to bring guide c uppermost and the other side of the tenon is cut like the former.

Claim.—The reversible bed with adjustable end guide c, stationary guide c^1, and devices for securing the lumber, operating as and for the purposes specified.

No. 17,175.—LAFAYETIE STEVENS, of Elmira, N. Y.—*Improved Machine for Tenoning Blind Slats.*—Patent dated April 28, 1857.—The slat being cut to the required length, it is placed on the sliding table C, with the rear end resting against the projecting end of gauge D, and the table is slid up to the knives K, which are attached to head I through the slot in guide F. As the tenon is cut by cutters K, it passes into the hole in the end of the mandrel of said cutters, when it will be cut off by spur b^1.

Claim.—The movable and reversible gage D, as described, in combination with the sliding table C, arranged and operating in connexion the mandrel head I, as made, and cutters *k*, and spur b^1, as described and for the purpose set forth.

No. 18,212.—PERRY PUTNAM and JOHN E. CRANE, of Lowell, Mass.—*Improved Tenoning Machine.*—Patent dated September 15, 1857.—The pieces to be operated upon are piled upon the table as represented at J; each piece is then fed from the bottom of the pile up to and between the cutter head E by the drivers V, which are attached to feeding rod T which is operated upon by rod R, cam Q on shaft P, gearing O N, and pulleys M K. The drivers catch and drive the lowest piece towards the cutters, and the pile, as soon as the lowest piece is removed, falls upon the drivers, and each succeeding piece is thus fed to the cutters.

The inventors say: We do not claim the parts of our machine separately.

But we *claim* their arrangement and operation specifically as shown for the purposes set forth.

No. 16,534.—SETH C. ELLIS, of Albany, N. Y.—*Improved Machine for Cutting Tenons on Blind Slats.*—Patent dated February 3, 1857.—The slats are placed in the guide-frame G G. As the box N is moved back by means of the lever P, the lowest slat S, which was supported by the upper surface of box N, drops into the position represented in the figure, and rests on the edges of frames B B, in range with the slots in the disks H, M, H. As the box is again moved forward, it pushes the slat forward and into the slots in the disks. By this time the cogs on wheel R take into the cog-wheeel L, giving the disk M and the slat a complete revolution. The return motion of the box then carries the finished slat back and up the inclines *e*, ready to be removed by hand.

Claim.—The arrangement of the rotating disks H H, with their slats *a a*, disposed in reference to and in combination with the saws, for the purpose of regulating the revolution of the slat so as to direct the saws in cutting perfectly cylindrical axes or tenons to it, substantially as set forth.

Further, the feeding apparatus, to wit: the sliding box N, disks M, with the wheels L and R, lying within the jaws J J, and the lever P, with the eccentric on W, acting together and in combination with the disks H H and saws, substantially as set forth.

No. 16,453.—JAMES D. SARVEN, of Maury county, Tenn.—*Improved Machine for Bending Timber.*—Patent dated January 20, 1857.—The timber to be bent in regular curves, such as fellies, is inserted at one end, in a groove of the cylinder T; and the shaft M, of the bending frame A, being inserted in a hole in the axis of said cylinder, the bending frame A is turned on said shaft M, the roller J pressing the timber against said cylinder, and bending the same. To bend timber in irregular forms, the wheel K is operated during the process of bending, which, by means of screw 9, presses the timber constantly against the irregular surface of any bending cylinder.

Claim.—The bending frame A, or its equivalent, arranged and operating substantially as described, and for the purposes set forth.

I also claim, in combination therewith, the mechanism and arrangement described, or other equivalent devices for the purpose of operating the bending roller I, or its equivalent, as specified—the whole being constructed and made to operate together, substantially as specified and for the purposes set forth.

I also claim, in combination with the bending frame A, or its equivalent, the mechanism and arrangement described, or other equivalent devices for the purposes of bending timber in regular or irregular forms or curves, if the same is used in combination with a revolving mold, or mold operating or arranged in any other manner.

No. 18,974.—JACOB HOKE, of Grand Detour, Ill.—*Improved Guide Gauge for Sawing Timber.*—Patent dated December 29, 1857.—This invention consists in the use of two squares A A^1 properly graduated, each arm *a* and *b* being provided with a slide *c*, and the parts so arranged that the log or stick of timber may be marked at once at four sides, if necessary or desired, and without adjusting the square after being properly fitted to the log or stick.

Claim.—The graduated squares A, constructed as shown, and provided with slides *c*, also graduated and arranged as and for the purpose set forth.

No. 18,588.—JOHN C. HINTZ, of Cincinnati, Ohio.—*Improved Machine for Turning Spiral Forms.*—Patent dated November 10, 1857.—This invention has for its object a means of producing spiral or other oblique carving on wood without "roughing" or "turning the grain," and is principally designed for the forming of spiral flutings and mouldings upon posts and other parts of household furniture.

Claim.—The inventor says: I do not claim the oppositely rotating cutters as new in themselves.

But I claim, first, in combination with the adjustable screw-cutting lathe, the described construction and arrangement of the gravitating frame L, and concentrically and oppositely rotating cutters K K^1, whereby the latter are made to cut in unison, and always over a point in the axis of the piece, in the manner and for the purposes set forth.

Second. In this connexion I claim the pair of finishing bits z z^1, operated automatically by means of the screw stem 1, ratchet wheel 2, tappets 3, and spring pawls 4, as described.

Third. In combination with the adjustable screw-cutting lathe

rotary cutters and gravitating frame, as aforesaid, I claim the described construction and arrangement of the roller *q* and bracket *p*, whereby (the brace O being disconnected) the said cutters may be vibrated in a (substantially) horizontal plane, at any desired angle to the stuff, for the production of spiral or oblique flutings on a prismatic post, as explained.

No. 18,001.—AUGUSTINE D. WAYMOTH, of Fitchburgh, Mass., assignor to Himself and HALE W. PAGE, of the same place.—*Improved Machine for Turning Spools.*—Patent dated August 11, 1857.—The wood being inserted and secured within the conical chuck F, shaft D is rotated and the tool *f* turns the spool to the required shape. The attendant by pressing his knee against the longer arm of lever L actuates the parts *n* and *g* in such a manner as will feed the tool *f* to the spool, reduce it to the required size, and next move it backward out of the way, when the severing cutter *o* will separate the turned spool from the wood.

Claim.—The combination of a stamping or milling wheel N with mechanism substantially as above described, for turning a spool from a piece of wood as explained; the said wheel being arranged so as to mill, engrave, or indent the end of a spool while said spool is being made or before it is separated from the stick as explained.

I also claim the combination of the two pitmen and the lever plate or wheel, or equivalent devices, with a lever for elevating the severing cutter, and that for carrying the body cutter; whereby the said body and severing cutters are made to operate in manner as specified, that is, during one single forward movement of the lever L, connected with the severing cutter.

I also claim the tapering screw-chuck F constructed as specified.

No. 16,705.—PETER H. NILES, assignor to Himself, NEHEMIAH HUNT, RALPH C. WEBSTER, and ALFRED DOUGLAS, Jr., of Boston, Mass.—*Improved Device to Operate the Mandrel Cutters in Turning Tapering Sticks.*—Patent dated February 24, 1857.—The cutters *i i i* rest upon inclined planes $c\ c^1\ c^2$, which are attached to a sleeve D. This sleeve can be moved horizontally upon the arbor A by means of arm J working in a groove upon the sleeve. The arm J can be moved by means of arm H firmly attached to the same shaft *a*, from which arm J extends. The rear end of H works in the grooved cam F. The disk upon which F is fastened is cogged and gears into worm K, which latter can be revolved as may be required by means of handle *h*. The springs $d\ d^1\ d^2$ serve to move the cutters back towards the arbor when the inclined planes are withdrawn.

The inventor says: I do not claim a chuck with movable jaws.

But I *claim* the method described of operating the cutters of a revolving cutter head, viz: by means of the springs $d\ d^1$, inclined planes $c\ c^1$, and the sleeve D, operated by a cam F, in the manner as set forth.

No. 17,958.—GILBERT BISHOP, of New York, N. Y.—*Improved Rotary Veneer Machine.*—Patent dated August 11, 1857.—The log being

squared, the cell *b* is screwed to the under side of the log, and both are placed in the log box; motion being given to shaft D^1, the edge of the curved knife E, which is secured to the lower side of disk D, is at once brought into contact with the log by a drawing cut; at the same time cam N presses upon toe L^3, which, being connected by arm K^1 and bar M with the end of the log box at *g*, forces the log box back and brings the log against the knife at a varying angle, and so that the knife in passing covers the whole upper surface of that end of the log which is towards *g*. When the cam N has passed the toe L^3, the other end g^1 of the log box, by means of the connecting bar M^1 and arm Q, has brought the toe L^2 forward so that it meets cam P; and being pressed upon by cam P, it vibrates the log box back by the same connexions, so that the surface of the log towards g^1 is covered by the knife at a varying angle of the cut; this again brings N and L^3 into position to again vibrate the log box, and the log to receive the stroke of the knife, as before.

Claim.—1st. The revolving disk and knife placed eccentrically to the disk upon the under surface or upon the edge of the disk, and having a curved edge for cutting the log in the line or direction of the edge of the knife.

2d. The vibrating of the log, by means of the log box, arms, cams, and toes, connected with the rotation of the shaft of the disk, as described, so as to present the whole top surface of the log to the edge of the knife as it passes, and by a continuously varying line of cut or stroke.

3d. The manner of constructing the log box with the movable bottom, composed of the cell and clamp pieces for holding, shifting, and adjusting the boxes described.

4th. The combination of the log box and feed apparatus operating together, as described.

No. 17,072.—Gilbert Bishop, of New York, N. Y.—*Improved Knife for Cutting Veneers.*—Patent dated April 21, 1857.—The knives A and A^1 are pivoted at *g* to rod D, and at *h* to plate B; and as a lateral motion back and forth is given to rod D, a similar vibratory movement is given to each of the knives A and A^1.

Claim.—Constructing the knife in sections, each having alternate smooth and toothed cutting edges attached together, and arranged and supported as described.

No. 16,529 —Peter Cook, of Tonawanda, N. Y.—*Improved Machine for Cutting Veneers.*—Patent dated Febuary 3, 1857.—E is a rod connecting the box *i i* to a revolving crank.

Claim.—The swinging box or head formed of the plates *i i*, said box or head working over concave beds B B and cutters C C, when the above parts are arranged substantially as shown, to allow the bolt F to feed itself to the cutters by its own gravity.

No. 17,190.—Gilbert Bishop, of New York, N. Y.—*Improved Machine for Cutting Veneers.*—Patent dated May 5, 1857.—When the log upon the carriage C begins to move towards knife P, the pin *x*,

figure 3, on carriage C, strikes against finger 18, carrying it round a short distance, which also moves crank 17, drawing down pitman 15, operating lever 13, pawl 14, and ratchet wheel 12 on shaft T, thus turning shaft T; and through it all the screws m m^1 and m^2, by which the plate O is suspended upon which the knife P travels, and thus dropping the plate and knife the exact distance of the thickness of the veneer to be cut.

Claim.—First. The arrangement of the knife P, suspended between the upright frame pieces A A and N N, at right angles to the log, and giving it a long continuous drawing cut across the log, whatever may be the width of the log, by means of screw Q^2, operated in the manner and by the means described.

Second. The horizontal grooved and slotted plate or knife bed o, attached to the sliding plates M M^1 M^2 M^3, held and guided between the uprights, and carrying, supporting, and strengthening the knife in its whole length, and at the same time allowing it a vertical movement for feeding it to the log as required.

Third. The arrangement of shaft T, the ratchet wheel 12, the slotted burr and connecting rod, the vibratory bent lever and star wheel, operating and connected together as described, for the purpose of giving motion to the feed screws m m m^1 m^2, as described.

No. 17,736.—Joseph H. Goodell, of Bridgeport, Conn.—*Improved Machine for Straightening Veneers.*—Patent dated July 7, 1857.—The nature of this invention will be understood by reference to the claim and engravings.

Claim.—The reduction or removal of the curve or scroll shape given the veneer in its cut from the log or stick, by the introduction and feed of it endwise; that is, transversely to the general direction of the curve, assumed by it in the cut between a roller or rollers, and carrying and pressing apron, arranged for operation together, and on the veneer, substantially as specified.

Further, in combination with the several rollers A B C D, and endless carrying and pressing apron H, when the same are relatively arranged as described, the adjustable frame M to the one roller D, to give increased or diminished pressure to the apron H, against the back of the pressing roller C, or interposed veneer, as and for the purpose set forth.

No. 17,329.—Edward Holmes and Britain Holmes, of Buffalo, N. Y.—*Improved Machine for Making Washboards.*—Patent dated May 19, 1857.—The back board of the washboard is placed upon the bed-plate S, fig 1, and between it and the wedge plate t; the zinc, being previously corrugated and fitted, is placed on the back board, the zinc projecting beyond the edges of the washboard. Motion being imparted to cranks F, the jaws j and j^2 are vibrated by the connexions h b a; the stiles of the washboard being placed within the spaces x l, the jaws j and j^2 press said stiles against the cutters p, the corrugations of which correspond with the corrugations of the zinc, said cutters making the incisions in the stiles, upon which the stiles are driven upon the zinc, the latter entering the incisions in the stiles.

Claim.—First. Increasing both stiles of the washboard at the same time, and also entering the zinc into the incision in both stiles at the same time, when the same is done by means substantially as set forth.

Second. Raising and lowering the end of the sliding arm *a* at its connexion with the vibrating lever *b*, for the purpose of controlling the number of blows to be given by the drivers and the force thereof, when the same is accomplished by means and used for the purpose substantially as described.

Third. The combination of the expanding iron frames with the wedge and cutters, for the purpose as set forth.

Fourth. The combination and arrangement of the series of levers *g h g h h j k h y* and *r n*, with the pin *g m*, and spiral spring *r n s*, and hook *l m*, or their equivalents, for the purposes substantially as set forth.

Fifth. The combination of the spiral spring K, or its equivalent, with the lever *l* and rod *m*, for the purpose of continuing the movement of the lever *l*, after the incision is made in the stiles, and the cutters withdrawn, so that the stiles will be carried to the zinc, and the zinc entered in the incision made by the cutters, substantially as described.

Sixth. The application of the eccentric *n*, in connexion with the lever *l* and its arrangements, or equivalents, for the purpose of applying power to make the incision in both stiles of the washboard at the same time, and also to facilitate the entrance of the zinc into both stiles at the same time, substantially as set forth.

No. 18,944.—O. L. Reynolds, of Dover, N. H., assignor to Hiram F. Snow, of Dover, N. H.—*Improved Machine for Cutting the zigzag Grooves in the Stiles of Washboards.*—Patent dated December 22, 1857.—This improvement consists in having a wheel E, provided with a zigzag cutting edge, placed on a shaft C, over a bed A, having a longitudinal groove F made in it to receive the stiles or side pieces G. The wheel, as it is turned, cuts the zigzag curves or slots in the stiles.

The inventor says: I do not claim zigzag cutting wheels as my invention, for I am well aware that they are old.

But I *claim* the method described of cutting or forming the grooves in the stiles or side pieces of washboards, in which corrugated metallic rubbing surfaces are employed.

No. 18,171.—L. B. Batcheller, of Arlington, Vt., assignor to West, Canfield, & Co., of the same place.—*Improved Method of Manufacturing Wooden Washboards.*—Patent dated September 8, 1857.—The cylinder C being set in motion, the board to be fluted is secured to the slide S. The front of the bed-piece B is now raised by tilting the edge of rocker *r*, to adjust the face of the board to the desired distance from the periphery of cylinder C, where it is held by detent *d*; and the front end of lever L is raised on to the periphery of the hub *u*, by which the rear end *z* is lowered down with pinion P, which takes hold of the teeth of rack R and moves the slide back the length of the blank, bringing the face of the blank into contact with the cutters *v*,

which are so arranged as to flute and finish the whole surface of the board by passing one under the cylinder.

Claim —The machine constructed, arranged, and operated as substantially set forth.

No. 18,379.—CHARLES F. BEVERLY, of Lancaster, Ohio —*Improved Machine for Bending Wood.*—Patent dated October 13, 1857.—This invention consists in the employment or use of a stationary mould in connexion with radial bending arms so arranged and operated that the "stuff" is bent from the centre outwards, the arms moving simultaneously in opposite directions from the centre of the "stuff," so that it will conform to and fit snugly the periphery of the mould. This invention has a peculiar arrangement of means whereby the "stuff" may be readily adjusted to the machine.

The inventor says: I claim the stationary mould F and arms G G, arranged and operated as shown, or in an equivalent way, for the purpose of bending the stuff R from its centre outwards or towards its ends, as described.

I further claim attaching the arms G G to an adjustable block H, operating in connexion with the lever L, as shown, for the purpose of allowing the stuff to be readily inserted or adjusted between the mould F and strap M, as described; and also for properly holding the stuff to the mould while the stuff is being acted upon by the rollers of the arms G G.

No. 18,917.—ISAAC LINDSLEY, of Providence, R. I.—*Improved Machine for Carving Wood.*—Patent dated December 22, 1857.—To one end of the lever R is attached the cord or chain S, which, passing over the pulleys V V, is, in turn, attached to the sliding cross-bar D; the lever R is adjusted by the cord or chain S in such a manner that, whatever may be the changes, up or down, as the work progresses in the position of D, the bar M will always be held in an appropriate position to afford a rest for the cam H to act upon; so that the lift and fall of the tracer by the cam will be, as to distance, uniformly the same in every stage of the work, no matter how great may be the ascent or descent of B in tracing the pattern.

The inventor says: I do not claim the use of a revolving cutter and accompanying tracer, as these have long been known and used.

But I *claim*, first, the use in carving machines of the lift and fall motion of the tracer, for the purpose of enabling the same to trace out any design, however sharp or difficult the same may be, as set forth.

Second. I claim the bar *m*, lever R, and cord S, in combination with the cross-bar D, in the manner and for the purposes set forth.

No. 17,169.—WATERMAN L. ORMSBY, of Jersey City, N. J.—*Improved Machine for Splitting Wood.*—Patent dated April 28, 1857.—The sticks of wood to be cut are placed in the open box *g*, and as said box is drawn towards saw *d* by means of cord *h*, which is attached to it, and passes around the driving shaft *a*, the rod *x* of the clamp slackens, the stick is held down and pressed against the saw, which

cuts clear through it. By the revolution of disk *k*, the motion of the box *g* is reversed, the clamp slackens its hold, and by the time the stick has dropped down again to *f*, preparatory for another cut, it is again moving to the saws. While one of the feed boxes *g* is conveying its charge to the saw, the other is receding from it to receive a fresh stick. The pieces of wood, as they are cut, are pushed along by the feed boxes *g* towards the centre of the gutter *f*, where they pass down to the splitting chisels *m*, which are reciprocated by means of crank shaft *p* and pitman *r*, and which split the wood.

Claim.—First. The arrangement of the chisels in broken or serrated and in diagonal lines, according to the nature of the wood to be split.

Second. The arrangement by which the apices of one row do not coincide, but alternate with those of an opposite row.

Third. The feeding apparatus and clamp, inclined as represented, by which sticks put into the feeding boxes require no further attention or handling till they drop as kindling wood from the splitting chisels.

Fourth. The combination of the feeding, sawing, and splitting apparatus, substantially as described, by which greater economy of time and power in preparing kindling wood is achieved than has been hitherto attained.

Fifth. The combination of the guide grooves in the flanch of the hopper, thereby avoiding the introduction of separate guide plates for the chisels.

No. 17,061.—William L. Williams, of New York, N. Y.—*Improved Machine for Splitting Wood.*—Patent dated April 14, 1857.—The pieces of wood cut to equal lengths are placed in an upright position on the feeding floor A; motion being given to driving shaft H, the prongs *d* of the feeding chains *c* push the wood up towards the knives *p*; the several pieces of wood, in being fed up to the knives, are jammed towards each other by reason of the tapering form of the sides *b* of the feeding floor; as the knives *p* split the wood, the levers *l*, turning on pivots *m* and operated by cams *n*, cause the sides *i* to move outward at each upward movement, and inward on each stroke of knives *p*.

Claim.—First. The combination of the feeding chains, arranged as set forth, with the stationary conveying floor for effecting the feeding up of the sticks in a fire-wood splitting machine, substantially as described.

Second. The movable side clamps operated by a positive motion, governed by the motion of the knives, and proportioned to the displacement of the wood by said knives, for the purpose of supporting the sticks laterally, and also of relieving the pressure upon the same, substantially as set forth.

Third. The arrangement of the two separate knives, each extending entirely across the feeding floor, and being set at such angle to each other, and such distance apart, as will effect the cross or second cutting upon a block, which is not at that feed receiving the first cut, substantially as described.

No. 17,249.—HENRY MELLISH, of Walpole, New Hampshire, assignor to CHARLES POPE, of Brookline, Massachusetts.—*Improved Cutters for Turning Cylindrical Wooden Boxes.*—Patent dated May 5, 1857.—The outer cylindrical surface of the box is formed by means of the cutters *a*, in the cutter ring H, while the cutting edge *x* on the tubular cylinder G cuts the ledge on the top of the box for the cover to rest upon. The cutting tool *m*, by means of its blades *o* and *p*, reduces the wood to form the interior surface of the box, the chips being discharged through the throats a^2.

Claim.—The cutting tools H, *x*, *m*, *t*, made with cutters or cutting edges, to operate substantially as specified, to cut and plane the box or box cover.

No. 18,646.—ALEXANDER S. NEWTON, of Brandon, Vermont.—*Improved Machine for Turning Wooden Boxes.*—Patent dated November 17, 1857.

The inventor says: I *claim*, 1st. The use of the combination of the grooved rod and bevel wheel on the end thereof with the wheel Q and cam T, substantially as set forth.

2d. I also claim the use and combination of the grooved rod, and bevel wheel on the end thereof with the wheel R and cams X and Y, substantially as set forth.

3d. I also claim the use and combination of the cam X with the lever Z, cutter lever b^2, and discharging bar f^2, or their equivalents, separately or collectively, for the purposes set forth.

4th. I also claim the cam Y, in combination with the lever K^2 and rack r^2, or equivalents for the said parts, substantially as set forth.

No. 16,953.—JOEL A. H. ELLIS, of Springfield, Vermont, assignor to JOEL WOODBURY, of the same place (trustee).—*Improved Form or Mould on which Wooden Slats, &c., are made into Baskets.*—Patent dated March 31, 1857.—The hoop R^1 which forms the inner hoop of the basket top is placed in the groove B, where it is held by means of the clamps F; the bottom, which consists of the pieces B and B^1, is placed on the top of the mould into the recess *m* and fastened down by means of a lever nut; the splints are then inserted between the plates B and B^1, and the hoop R is forced down over the splints; the bottom pieces B and B^1 are then nailed together, and the basket is completed.

Claim.—The basket mould, constructed substantially as described, viz: of a block or former A, made with annular and top recesses, and provided with a shoulder ring C, hoop catches F F, and the bottom clamping plate and screws, or equivalents therefor, the whole being used in the manner and for the purpose as specified.

No. 17,992.—BAXTER D. WHITNEY, of Winchendon, Mass.—*Improved Machine for Smoothing Planed Wooden Surfaces.*—Patent dated August 11, 1857.—By depressing lever S the clamp M is raised, and the piece of stuff to be smoothed is laid on the carriage B, and is held there by clamp M on releasing lever S. By raising lever G to

the position represented in the engraving, the pinion C is engaged with rack *b*; and as shaft D is rotated, the carriage B is drawn along under the scraper *n*, and the stuff is planed. The carriage B is moved forward until the dog K comes in contact with lever H, when said lever is tripped from under lever G, which is allowed to drop, and the pinion C falls out of gear with the rack *b*, and the carriage is free to be drawn back for the next operation.

Claim.—The scraper *u*, pivoted and operating in the manner substantially as described, in combination with a mechanism for the purpose of carrying the wood forward in contact with the scraper.

XV.—STONE AND CLAY.

No. 18,629.—JOHN B. COLLEN, of Philadelphia, Pa.—*Improved Brick Machine.*—Patent dated November 17, 1857.—This improvement consists in employing perforated plates, so arranged and operating as to serve the double purpose of forming the bottom of the moulds and forcing the brick free from the same, in combination with another set of plates so arranged in respect to the first that the superfluous clay which passes through the perforations, as each brick is being formed, may be discharged at the rear of the machine.

Claim.—The perforated plates F^1, operating as described, in combination with the inclined plate or apron *j*, the whole operating in the manner and for the purposes set forth.

No. 16,385.—JACOB HOCKMAN, of Mexico, Ind —*Improvement in Brick Machines.*—Patent dated January 13, 1857.—The hopper B being filled with clay, the operator lifts up the handles H, thus bringing the rollers P in contact with the ground, by means of which the cylinder W and driving wheels A A^1 are raised from the ground. The machine is now moved to the place designated for the reception of the moulded bricks, when the handle H is lowered, so as to let the wheels A A^1 rest on the ground; and as the machine is drawn along by pushing on handle F, the wheels A and mould cylinder W are rolled over the ground, and the bricks are discharged from their moulds by roller J operating the clearers *m*, and are deposited on the ground.

Claim.—The under frame or carriage H G^1 G^1, and trucks or rollers P P^1, in combination with the main supporting wheels A A^1 and rotating cylinder of moulds W, when arranged to operate in the manner and for the purposes specified.

No. 16,449.—B. F. NAVE, of Roanoke, Indiana.—*Improvement in Brick Machines.*—Patent dated January 20, 1857.—As the machine is drawn along, the cross bars V, which slide in grooves of the mould wheel and operate the moulds L, act upon the lever U, each cross-bar moving lever U from its position, shown in full lines, to the one shown in dotted lines. In the latter position the cup 2 of the said

gauge is filled with sand, which, as lever U descends, is discharged on mould L, which, when thus sanded, passes into hopper H, to be filled with clay.

Claim.—The peculiar manner of operating the said gauge T by means of bent levers U U, in combination with cross-bars V and shields W, when the described parts are constructed and arranged for joint operation in the manner and for the purposes set forth.

No. 16,561.—WILLIAM WOOD, of Hartford Connecticut.—*Improvement in Brick Machines.*—Patent dated February 3, 1857.—By this arrangement, all obstructions in the press-box or grate can be quickly removed and the machine adjusted for use again. The bottom of the slides *s* being bevelled, a stone will frequently force itself under, and lift up the slide and come out. D are the moulds.

Claim.—Constructing the front of the press-box *c* with the front of the grate L attached thereto, so that, by means of slides S and swing front J, a portion or all of the front of both press-box and grate can be raised in the manner and for the purpose set forth.

No. 16,839.—ALMON V. HOUGH and RICHARD W. JONES, of Green Castle, Indiana.—*Improvement in Brick Machines.*—Patent dated March 17, 1857.—The nature of this invention consists in the use and application of two horizontal shafts within a perforated moulding chamber, having oval or flanged wings at one side, and arms or beaters on the other side, acting both as mixers and pressers, revolving together inversely, cutting off from above a sufficiency of mud to fill the moulds.

The inventors say: We *claim* the use and application of two horizontal shafts, provided with oval or flanged wings V on one side, and arms or beaters V on the opposite side, in the lower perforated chamber O, and in combination therewith, for the purpose of moulding and pressing the brick in the manner and for the purpose set forth.

No. 16,907.—JAMES A. DORR, IRA HERSEY, and EDWARD G. OLDFIELD, of New York, N. Y.—*Improvement in Brick Machines.*—The operation of this machine is as follows: Motion being imparted to shaft H, the stud A^1 on cam L operates the forked lever Y, which, turning on its fulcrum Z, operates lever X, which pushes the charger W filled with clay from under the hopper C^1 over a table and above the moulds; the mould frame M and shaft I are raised by the compound action of the cams L upon the gliding rollers K and by the action of the eccentric R. These cams and eccentrics regulate the motion of the mould boxes J D^1 and V in which the bricks are formed, and when formed they are discharged and pushed on to the table H^1 by the charger W as it brings another charge to fill the moulds.

Claim.—The combination of the cams L L, eccentric R, and slotted projection P attached to strap Q, with the rollers K K, beam I, and lower pistons J J, when said parts are constructed and arranged in the manner and for the purpose set forth.

No. 17,131.—G. I. WASHBURN and E. H. BELLOWS, of Worcester, Massachusetts, assignors to Themselves and C. WASHBURN, of the same place.—*Improvement in Brick Machines.*—Patent dated April 21, 1857.—The prepared clay is placed in mould No. 1; and as the mould cylinder is revolved, the cam *i*, striking on toe *h*, lifts the plunger bar P out of the preceding mould 1, and holds it up clear of the edge of the heads G. At the time the bar P is lifted out of the notch M, one of the pins *m* strikes against the short arm of the bell crank W, which throws the bar P, with the arm R and lever X, into the position seen in dotted lines in fig. 1, when the cam *i*, leaving toe *h*, allows the bar P to rest on the edge of the heads G; and as the cylinder moves on, the bar P strikes against the higher side of the notch M and drops into it; and as it is carried along with the cylinder, the continued motion of said cylinder causes a pressure to be applied to the bar P and its plunger which has entered the mould. As the cylinder has been progressing, the pins *a* have followed the cam grooves I, and cause the plungers H to slide in the mould, and at the proper point to compress the brick against bar P. When the brick has been thus pressed, the further motion of the cylinder causes the plunger H at No. 3 to force the brick out of mould I, which is then deposited on an endless carrier cloth.

Claim.—1st. The method described of applying pressure to the plunger by means of the radial arms R and levers X, operating in the manner substantially as set forth for the purpose specified.

2d. The combination of the radial arms H H with the sliding moulds I I and moving block or plunger P, when said parts are constructed and arranged to operate in relation to each other substantially in the manner and for the purpose set forth.

No. 17,220.—JOSEPH W. JAYNE, of Sandusky Ohio.—*Improvement in Brick Machines.*—Patent dated May 5, 1857.—Motion being imparted to the main disk wheel E F which carries the brick moulds, each of the charges H successively passes under the hopper *h*, and becomes filled with clay. The charges in succession move gradually out and fill the moulds, and slide in again to be in turn filled. After the mould is thus filled by the charger, the upper and lower followers P and P^1 which had been previously kept apart by the track *a b c*, and a corresponding lower track, are released from the track and rest upon the surface of the clay above and below. The revolution of E F now brings each pair of followers P and P^1 successively between the converging surfaces m^2 *m* and m^1 m^3 of the yoke M M^1; and as the rollers *f* and f^1 roll along these planes, the pressers P P^1 are forced together, and a powerful pressure is exerted on both sides of the clay in the mould; and this continues until the pressers pass from the extremity of the yoke, when the track *a b c* and the projections *e* cause the upper pressers to rise entirely above the mould and high enough to escape above, and the inclined track *d i* causes the lower presser to rise through the mould and to push up the formed brick to the level of the upper surface of wheel E F, whence it can be removed.

The inventor says: I *claim*, first, the radial, sliding, and revolving charges H H H, in combination with the eccentric slot or groove L L^1

L^2 L^3, and horizontal mould wheel E F, said parts being arranged and operating substantially as described.

I do not claim generally the use of double conveying surfaces for pressing bricks.

Second. The combination of the peculiarly shaped yoke M M^1 with the mould wheel E F and the sliding and revolving charges H H H, the whole being constructed and operating conjointly, and arranged substantially as described.

No. 17,248.—JAMES HOTCHKISS and WILLIAM H. SCOFIELD, of Yellow Springs, Ohio, assignors to Themselves and WILLIAM R. KING, of the same place.—*Improvement in Brick Machines.*—Patent dated May 5, 1857.—The operation of this machine is as follows: First, the upper plunger carrier G of plunger H is drawn inward, and the carrier of the lower plunger I outward, for receiving the clay from hopper A, which drops into mould *d;* then as the mould wheel E passes around, plunger I remains out, and the carrier of plunger H is forced outward. The pressure is then communicated to the brick by the action of cams M and N on the plungers H I. The plunger I then descends from the mould, and its carrier is drawn in away therefrom till the mould *d* arrives over the aperture T, when plunger H is forced down by cam L, thereby removing the brick from the mould; the plunger H is then raised out of the mould *d* by cam P, ready to repeat the operation just described.

Claim. The combination of the plungers H H and I I with the sliding carriers G G and mould wheel E, when the same are so constructed and arranged as to operate in relation to each other in the manner and for the purposes set forth.

No. 17,390.—STEPHEN PARKS, of San Francisco, California.—*Improvement in Brick Machines.*—Patent dated May 26, 1857.—The tempered clay in hopper C is forced by blades S of the rotary scraper D through the space *e* into the mould box C, and underneath the piston *u;* and motion being given to the several parts of the machine, the piston *u* is forced downward, compressing the clay in the mould box. When the piston *u* rises, another mould is brought underneath the box *c*, the scraper *i* taking off the superfluous clay, and the smoother *h* smoothing the upper surface of the clay in the mould.

The inventor says: I do not claim the rotating shafts *q* provided with teeth or arms *g* for tempering the clay, for they have been previously used.

Neither do I claim feeding the moulds to the press-box by means of a reciprocating or swing cross-head, for I am aware that such a device has been used before.

But I *claim* feeding the moulds to or underneath the moulding or press-box C, and also discharging them therefrom by means of the reciprocating and swinging cross-head f^1 operated by the rods a^1 a^2 connected with the slides b^2, and the shafts A^1 B^2 when used in combination with the pivoted inclined planes *d d* and projecting arms g^1 g^2 substantially as described for the purpose specified.

No. 17,759.—STEPHEN USTICK, of Philadelphia, Pennsylvania.—*Improvement in Brick Machines.*—Patent dated July 7, 1857.—A detailed description of this invention would take up too much space to be given here; the principal features thereof will be understood by reference to the claim and engravings.

Claim.—The piston E and filling box E^2, when connected together as described, in combination with the movable and weighted mould box G and lower piston K, when said parts are constructed and arranged to operate in relation to each other in the manner and for the purposes set forth.

No. 18,040.—P. S. DEVLAN, of Reading, Pa.—*Improvement in Brick Machines.*—Patent dated August 25, 1857.—As shaft B is rotated, the feed wheel *a* in hopper C is turned one quarter of a revolution at each revolution of shaft B, by the arrangement of rod *e*, lever *d*, pawl 3, and ratchet 2; at the same time the plunger G forces the clay into the mould *n*, said plunger being operated by eccentric E. When the mould *n* arrives opposite the plunger *t*, the pin *r* operates slide *s*, rod *u*, and plunger *t*, and the latter pushes the pressed brick from the mould, and the brick is deposited upon the slide *v*.

Claim.—In combination with a clay receptacle, supplied by a positive feed, and a rocking or partially rotating mould wheel H, the plungers G and *t*—the first for pressing and the second for delivering the pressed brick; the parts being so arranged as that said wheel will rock or roll from one plunger to the other and be held in the manner and for the purpose set forth.

No. 18,166.—STEPHEN USTICK, of Philadelphia, Pa.—*Improvement in Brick Machines.*—Patent dated September 8, 1857.—The clay passes from hopper D into the oscillating filling box E^2 each time that said filling box comes under hopper *d*; and as yoke H is depressed by a suitable cam motion, the clay is conveyed from the filling box E^2 into the compressing mould G by means of the projections *c* and depressions c^1 in such a manner as to get a greater portion of clay in the corners and edges of the mould than in the middle, and thus to secure great compactness and solidity of the brick.

Claim.—The oscillating filling box E^2, with projections *c c* at its ends, in combination with the condensing mould G, having depressions c^1 c^2 at its ends, when said parts are constructed and arranged to operate in relation to each other, and in connexion with the pistons E^1 and K^1, as described.

No. 18,226.—GEORGE I. WASHBURN, of Worcester, Mass., assignor to Himself and ANSON L. HOBART, of the same place.—*Improvement in Brick Machines.*—Patent dated September 15, 1857.—As the machine is drawn along, the clay passes from hopper D, through passages *b* and spout F, to the mould E, the friction of the moulds upon the ground being sufficient to cause the endless belt of blocks to revolve over the drum G; and as each mould is filled, the pins *i* i^1 enter and ascend the inclined groove *p*, by which the mould is raised from the ground and the brick is left upon the surface in the required place for it to dry

without being handled; as the moulds ascend the groove *p*, the pins *i* i^1 strike alternately against the switch *r* and enter their respective grooves *o n*, by which they are again guided around over the drums G.

Claim.—The combination of the moulds E, of the frame A, and hopper D, constructed, arranged, and operated together, substantially in the manner and for the purpose described.

No. 16,468.—GEORGE CRANGLE, of Philadelphia, Pa.—*Improvement in Rotary Brick Machines.*—Patent dated January 27, 1857.—The nature of this invention will be understood by reference to the claim and engraving.

The inventor says: I do not claim the use of a roller for pressing the clay into the moulds of a rotary mould cylinder; nor do I claim any particular form or construction of the pressing surfaces of the roller B; nor do I claim a pressing cylinder with recesses and moving platens for receiving the clay from the surface of the respective partitions of the opposite mould cylinder and forming it into bricks by the pressure of the said surfaces, as in Zach. M. Paul's machine, patented October 3, 1854.

I *claim* the pressing roller or small cylinder B, having the recesses *h h* fitted with the coupled moving pistons or slides *k k*, so that as the surplus clay on the face of the partition which is next above the mould, then forming a brick, is pressed into the recess of the roller B by the said partition, the opposite piston shall thereby be caused to discharge the previously taken up clay which is in the recess at the opposite side of the pressing roller B; being constructed and operating in combination with the mould cylinder A, in the manner and for the purpose set forth.

No. 16,649.—SAMUEL LILLIE, Jr., of Fort Wayne, Ind.—*Improved Brick Press.*—Patented February 17, 1857.—A hollow box with a grate in its bottom is employed for a plunger, to force the clay into the moulds; and there is an adjusting platform for allowing the plunger and moulds to operate correctly when gravel or stones may be in the clay. The plunger box for stuffing the moulds is operated in pressing by a treadle, but it descends by its own gravity. The engraving does not exhibit the pug-mill which is arranged above the hole *f*.

The inventor says: I do not claim the mud-mill, for that is well known; but I *claim* forcing the clay into the moulds and compressing it therein by means of a hollow plunger E, fitted and working within the box C, and connected with the platforms I J, on which the moulds are placed, so that the plunger and mould to be fitted rise and fall together, substantially as shown and described.

No. 18,318.—EPHRAIM H. BELLOWS, of Worcester, Mass.—*Improved Brick Press.*—Patent dated October 6, 1857.—This invention consists in the employment or use of an endless chain or carrier, in connexion with two reciprocating plungers and a press-box.

The bricks, designated by K in the drawing, being partially dried and placed between the links *e*, in the angle of the guide J, and mo-

tion being given to the shaft A, an intermittent movement is given to the endless chain G by means of the notch *j* in the frame N catching against or over the rivets of the joints *f*, said frame being operated by means of the arms *i i*, rock shaft M, bar K, and eccentric L; at the same time a reciprocating movement is given to the plungers C C by the revolution of the cams E E.

The bricks are carried by the chain successively before the box or case F, and may be taken from the chain by hand, or other proper means, as they are moved along after being ejected from box F.

In showing his *claim*, the inventor says: I am aware that plungers have been so arranged as to operate simultaneously at opposite sides of a brick for the purpose of compressing the same. This device is common to many brick presses, and I therefore do not claim broadly such device.

But I claim the combination of the plungers C C, intermittently moving apron G and frame N, with the case or box F, the whole being constructed and arranged so as to operate conjointly as and for the purpose set forth.

No. 17,546.—R. R. HARBOUR, of Oskaloosa, Iowa.—*Improvement in Brick Presses.*—Patent dated June 9, 1857.—Rotary motion being given to the circle-plate A^1, the moulds E come successively under a hopper, and are filled with clay from said hopper. As soon as a mould E is charged, one of the levers K comes in contact with the friction-wheel L, forcing in slide J of said mould, and at the same time forcing out the slide J^1 of the opposite mould E^1. As soon as this occurs, one of the pressing levers H comes in contact with the friction-wheel, and is gradually forced with its follower G towards the axis of the circle-plate, thereby pressing the brick; the opposite follower G^1 being by the same movement forced towards the periphery of the wheel, thus releasing its pressed brick. The discharging of the bricks is effected by means of levers M passing over rollers N, by which the bottoms of the moulds are raised and the bricks are forced out upon the top of the circle-plate.

Claim.—The employment, in combination with the wheel L, of the two sets of levers, H H^1 and K K^1, arranged eccentrically within a circle, and on a revolving circle-plate, and connected with the tops of the moulds of said plate, and with the followers of the same, substantially as and for the purpose set forth.

No. 17,203.—GEORGE CRANGLE, of Philadelphia, Pa.—*Improvement in Rotary Brick Machines.*—Patent dated May 5, 1857.—Clay being placed in the hopper, and an alternate stopping and moving rotation being given to the cylinder A in the usual manner, the bed-piece B forms a bottom to the moulds *f* during the time they are under the hopper, and subsequently under the plungers, and then allows the pressed brick to pass to the place of discharge without contact with the bed-piece B.

The inventor says: I do not claim the manner of supporting nor of operating the cylinder and plungers specified or described, as these have been described and used before in other cases.

But I *claim* a cylinder A, without movable bottoms to the moulds, in combination with a bed-piece B, fixed to the frame of the machine, so as to serve the purpose of said bottom, the said cylinder A and bed-piece B being constructed, arranged, combined, and operated together, as and for the purpose set forth.

No. 17,939 —I. Z. A. WAGNER, of Philadelphia, Pa., assignor to EDWARD S. RENWICK, of New York, N. Y.—*Improvement in Machines for Moulding Bricks.*—Patent dated August 11, 1857.—As the cylinder A is rotated, the moulds *a* pass into hopper D, where they become filled with clay, the excess of which is stripped off by wheel C, and the brick is pressed by wheel E, and is discharged by rods *e*, which are operated by their rollers *c* coming in contact with guide-board *d*.

Claim.—In my machine for making tubular bricks, the combination of the mould-box *a* with a core G and an annular bottom *b*, or piston, the whole constructed and operating substantially as set forth.

No 16,457.—R. H. SMITH, of Cincinnati, Ohio.—*Roofing Cement.*—Patent dated January 20, 1857.—Twenty-one parts of coal tar and one part of India rubber solution, twenty-eight parts of coal tar and one part of gum shellac dissolved in alcohol, twenty one parts of coal tar and one part of boiled linseed oil, twenty-eight parts of coal tar and one part of common molasses, are thoroughly incorporated, after having each solution well stirred and mixed; and four gallons of this mixture, with one quart of the drying compound, composed of the following parts, will form a roofing cement:

Six parts of quick-lime and one part of pulverized gypsum, thirty parts of quick-lime, one part of yellow ochre, twenty-four parts of quick-lime, one part of litharge.

The inventor says: I do not claim any or either of the above mentioned ingredients when used of themselves, or when combined with each other, broadly.

But I *claim* a cement, formed by materials prepared in the manner and in the proportions set forth, whereby a cement may be made and applied to roofing and other purposes, without the aid of fire to render it fluid, and by which the offensive smell arising from the use of coal, tar, &c., is neutralized, as described.

No. 17,505.—IRA HERSEY and JAMES H. VAN RIPER, of Mew York, N. Y.—*Improvement in Clay Pulverizers.*—Patent dated June 9, 1857.—The clay enters the grated cylinder O from hopper S; and motion being given to the driving shaft E, it is transmitted, by pulleys J and L, to shaft C; and as the beaters M revolve with shaft C, they pulverize the clay in cylinder O, and the pulverized clay drops through the openings in the cylinder, while the spirally arranged beaters M push the stones and other matter to the other end of the cylinder, discharging them over chute Z. The efficiency of this machine is augmented by imparting to cylinder O a rotary motion in a direction contrary to the revolutions of the beaters M, which is effected by pulley R working in a grooved pulley Q of the cylinder O.

Claim.—The combination of the grated cylinder or separator O O,

open at its ends, and supported on its outside by the driving-wheels Q Q, with the movable and adjustable beaters M M on the shaft C C, when the same are constructed and arranged for joint operation, substantially as described.

No. 18,059.—SAMUEL RICHARDS, of Philadelphia, Pa.—*Improvement in Glass Furnaces.*—Patent dated August 25, 1857.—The fire being made in the drying furnace C, the wood is fed in single sticks or small bundles on to the links I of the endless carrier which conveys the wood slowly through the flue F F^1, and then delivers it in a dry state at the box L, whence the sticks slide down into the glass furnaces B and B^1 by means of the chutes M^1 M M^2.

Claim.—The arrangement of the drying ovens C, the flue F F^1, and the endless carrier I I I, and the chutes M M^1 M^2 M^3, in combination with the glass furnaces, in the manner and for the purpose substantially as described.

No. 17,960.—HIRAM DILLAWAY, of Sandwich, Massachusetts.—*Improvement in Glassware Holders.*—Patent dated August 11, 1857.—To insert an article into this holder, the part C of the yoke is pulled against a stand H I, and the article can be inserted laterally between the plates B D; or if the article is of a parallel sided form, it is inserted between the dies *g*, which hold it tightly as the plate B is driven towards plate D.

Claim.—An instrument composed of a handle, a supporting plate, a yoke, and a spring, combined to operate substantially as described, for the purpose set forth, whether the yoke be provided or not with an internal holding die *g g*, as specified.

No. 18,392.—TIMOTHY DEMING, of East Hartford, Connecticut.—*Improvement in the Manufacture of Artificial Hones.*—Patent dated October 13, 1857.—The object of this invention is to produce, from emery and glue, a more compact and solid hone, one more efficient in its operation and more durable than the kind hitherto constructed, and one resembling, in every essential respect, a natural stone or hone.

In the drawings, A represents a flat wooden stock on which the mixture of glue and emery is placed. One or both sides of the stock, as desired, may be covered with a number of thin layers *a a a* of the mixture, and each layer compressed after it is applied to the stock, the pressure being sufficiently powerful to render the mixture solid and very compact. Any number of layers may be applied, according to the thickness required.

The inventor says: I do not claim a compound of glue and emery for constructing and forming artificial hones; for this is a well known composition, and is commonly used for such purpose.

But I *claim* the particular mode of applying such composition as described—that is to say, forming or constructing the hone by placing the composition in thin layers on the stock or bed, and subjecting each layer to a requisite degree of pressure.

No. 17,098.—AARON JEFFRIES, of Alleghany county, Pa.—*Improved Lime Kiln.*—Patent dated April 21, 1857.—This lime kiln is constructed in the form of a hexagon on the exterior, on the alternate sides of which are placed the three arched furnaces A B C. The draught from each of these furnaces strikes the alternate blank wall directly opposite the interior part of the furnace, thus heating every part of the circular chamber D in a perfect manner.

The inventor says: I do not claim the form of the stack above the arches in the interior.

But I *claim* the combination and arrangement of the three furnaces A B C with the cooling or draught flues *b b b*, when the same are constructed and arranged in relation to each other within a hexagonal stack, in the manner and for the purpose set forth.

No. 17,056.—WILLIAM ROBINSON, of Baltimore, Md.—*Improvement in Lime Kilns.*—Patent dated April 14, 1857.—The lime is fed in at the top of the stack and settles down in process of burning, it being divided in two parts by the bridge *a*, and eventually drops to the bottom of the chambers *c*. The limestone is burned by the flame and heated gases passing through flues *e* leading from the central fire-chamber E, and through flues *i* leading from the side fire-chambers G and H.

Claim.—In connexion with the central fire and partition B, the arrangement of the side or auxiliary fires G H, for the purpose of more equally introducing the heat into the stack, and promoting more uniform burning, as set forth.

No. 17,807.—LEONARD PHLEGER, of Philadelphia, Pennsylvania.—*Improvement in Lime Kilns.*—Patent dated July 14, 1857.

The limestone is thrown on to the frame of the cells H H; and as the heat rises from the fire below, it passes through the spaces J between the cells *l*, and communicates its heat to the limestone above; a constant circulation of water is kept up from a reservoir and prevents the cells *l* from being burned.

Claim.—The employment in a lime kiln of a series of water cells for supporting the limestone, arranged and operating as described.

No. 17,885.—JOHN MCGREGOR, of Selma, Alabama.—*Improvement in Lime Kilns.*—Patent dated July 28, 1857.

Figure 1 represents a longitudinal vertical section, and fig. 2 a horizontal cross section of this kiln. In the line *x x* the invention relates to the particular construction of the kiln, and will be understood by reference to the claim and engravings.

Claim.—The particular arrangement of the furnaces or fire chambers K K K K in relation to each other and to the square chamber C, when the same are constructed and used in combination with the draught holes *d d* and fire flues M, in the manner and for the purpose herein set forth and described.

No. 17,889.—CLARK D. PAGE, of Rochester, New York.—*Improvement in Lime Kilns.*—Patent dated July 28, 1857.

The sticks of wood, being introduced into the arches A, are exposed upon the grate G to the draught entering through the holes *h*. The small fragments of charcoal fall down upon plate B; and when they have accumulated to a sufficient extent, the plate B is withdrawn and the fragments will fall on to the second grate *r*, and may there be completely burned up; and the heated gases arising from their combustion are carried into the kiln through the tubular flue T, where they serve to aid the general calcination.

Claim.—The combination of the primary grates G and the secondary grates *r* with the plate B and tubular flue T, when the same are arranged to operate in relation to each other in the manner and for the purpose set forth.

No. 17,986.—DANIEL STEPHENS, of Elmira, New York.—*Improvement in Lime Kilns.*—Patent dated August 11, 1857.

The oblique flues C are formed in the dividing wall of the taper branches *b*, and afford all the advantages of wide horizontal and vertical flues without having the disadvantages of either.

Claim.—The diagonal or oblique flues with sloping bottoms, arranged substantially as described, in combination with the shaft B and its branches *b b*, for the purpose specified.

No. 18,531.—A. G. ANDERSON, of Quincy, Illinois.—*Improvement in Lime Kilns.*—Patent dated November 3, 1857.

A is the furnace, situated under the cupola B, and arched over with a fire-brick arch C, in which are numerous orifices *a* for the escape of the flame and products of combustion from the furnace up through the cupola. This furnace extends right across the bottom of the cupola, as shown in fig. 1, but not the whole width of it, as a throat *b* is made on each side of it for the withdrawal of the lime. D D are chambers at the bottom of the throats for the reception of the lime, and *d d* are doors through which the lime is withdrawn from the chambers; *e e* are the furnace doors; E is the pit; F F are sliding dampers, to close the throats to prevent a draught of cold air through them into the cupola while the lime is being withdrawn; *f f* are passages in the walls of the cupola for the upward escape of gasses from the lime in the chambers.

Claim.—The combination of the perforated arch C and escape passages *f f* with the throats *b b*, chambers D D, dampers F F, holes *g g*, and supporting and removable bars *h h*; the same being constructed and arranged for joint operation substantially as and for the purpose set forth.

No. 18,635.—POWELL GRISCOM and CHARLES S. DENN, of Baltimore, Maryland.—*Improvement in Lime Kilns.*—Patent dated November 17, 1857.

The nature of this invention consists in an arrangement embracing, for united operation, the following features: 1st. The inverted oblong pyramidical lime basin B in the base A of the kiln, having discharge and clearing passages N N. 2d. The fire grates D D and ash pits E E extending from the front to the back of the basin on each of the

oblong sides of the same, but divided by central partitions. 3d. The pyramidic burning stack G, with a chamber *a b* of oblong quadrilateral form at its base, and gradually running into an oval form as it terminates, and having fire chambers H I, which extend from front to back, but are divided at the centre by partitions F^1 F^1, and having also lateral flame and hot-air passages leading directly into the chamber of the pyramidic stack along the whole width of the quadrilateral portion of the burning-chamber.

The inventors say: We do not wish to be understood as claiming any of the parts separately.

But we *claim* the peculiar combination and arrangement of the parts as described, and for the purposes set forth.

No. 18,764.—JACOB NEWKIRK, of Factoryville, New York.—*Improvement in Lime Kilns.*—Patent dated December 1, 1857.

The claim and engravings explain the nature of this invention.

The inventor says: I *claim*, instead of taking the upper fire flues directly from the fire chamber into the interior of the kiln, the carrying a portion of the flame and heat up into the arch, and thence by the upper flues into the stack or interior of the kiln; by which means I economize and make a better distribution of the heat and better draught than when it is taken alone and immediately from the fire chamber, as set forth.

No. 17,125.—CHARLES P. S. WARDWELL, of Lake Village, New Hampshire.—*Improvement in Machines for Forming Clay Pipes.*—Patent dated April 21, 1857.

A detailed description of this invention would take up too much space to be given here. The principal features thereof will be understood by reference to the claim and engravings.

Claim.—The arrangement and combination of the respective devices described, by which the necessary and successive stoppings and startings of the piston G are effected, by which the dies I I are opened and again closed at the proper moments, and by which the knives U U are brought into action when required; all by simply moving the lever *n* up and back again in connexion with the pressure of the clay against the piston M, substantially as set forth.

No. 18,298.—PHILIP POINTON, of Baraboo, Wis.—*Improvement in Machines for Manufacturing Pottery Ware.*—Patent dated September 29, 1857.—The plan of operating this improved machine is as follows: A suitable mould O having been secured to the wheel N, and a corresponding bottom being attached to the top of the rod *m*, the operator raises the lever I into the position seen in figure 1, where it is retained by a counterpoise on a cord led over the pulleys O on the top of the frame (this cord and weight are not shown in the drawings); he then places a piece of tempered clay on the bottom *n*, which remains stationary in the position shown in figure 1, whilst the mould O is revolved by a band on the pulley *f*; he then brings down the lever I into the position of figure 2, forcing the plunger L into the mould forming the article to be moulded, when the surplus clay will be forced

out over the edge of the mould; the projecting shoulder *r* of the plunger, coming down on the edge of the mould, will cut off and smooth the top edge of the article; so soon as the bottom *n* is brought into contact with the wheel N, it revolves with the latter, the rod *m* turning with it; when the operator has thus moulded the article, he raises the lever I into the position shown in figure 1, which lifts the bottom with the finished article on it out of the mould, when it may be removed and the work continued as before.

The inventor says: I do not wish to be understood as claiming a plunger descending into a revolving mould, nor a movable bottom acted upon through a hollow shaft; both of which, I am aware, are in use.

But I *claim* operating the movable bottom *n* and plunger L simultaneously, by means of the sliding rods *h* and cross-head P, in combination with lever I and rack K, the whole arranged substantially as set forth.

No. 16,687.—JOHN W. HOARD, of Providence, R. I.—*Improvement in Marking Slates.*—Patent dated February 24, 1857.—The quartz solution is combined with any anti-deliquescent drying or coloring substance suitable for the purpose, and in a pasty state it is spread smoothly on leaves of wood, sheets of pasteboard, or metal, to which it firmly adheres, soon dries, and is fit for use, thus making strong and cheap slates.

The inventor says: I do not *claim* liquid quartz itself for producing indurative surfaces for marking upon.

But I *claim* it as the vehicle for manufacturing artificial marking or writing slate, when combined with oxyde of zinc, as a drying anti-deliquescent and coloring substance, in the manner and for the purpose set forth.

No. 17,993.—GEORGE H. WOOD, of Green Bay, Wis.—*Improvement in Machines for Polishing Stone and Glass.*—Patent dated August 11, 1857.—Rotary motion being given to shaft E, the shaft *j* of the polisher F will be rotated around a point which is at the centre of the lower end of shaft E; and said polisher will also, in consequence of the gearing *h k l*, have a rotating motion on its axis in a direction reverse to that given to the polisher by shaft E, and will operate on the material, which is placed on carriage K. As the polisher is operated, a reciprocating motion is given to the carriage K by means of the shafts M L, gearing e^1 d^1, pinion c^1, rack b^1, the slide N being operated by the slots k^1 k^1 in the plate l^1, and said slide causing the pinion e^1 to gear alternately into pinions d^1, and thereby give a reciprocating motion to the carriage.

Claim.—The polisher F, supported and operated as above described, in combination with the adjustable guide and gauge frame G and the reciprocating carriage K, when the whole is arranged to operate conjointly as shown, for the purpose specified.

No. 16,545.—DAVID HINMAN, of Berea, Ohio.—*Improvement in Machines for Dressing and Polishing Stone.*—Patent dated February

3, 1857.—The sand and water pass through the hollow shafts B B^1, and through the centres of the disks A A^1, between these disks and the surface of the stone R to be dressed. During the revolutions of the disks, the stone is moved forward and backward, in consequence of its being hung to the rod Q and to the revolving crank P.

Claim.—The combination of the disks A and A^1 attached to hollow revolving shafts B and B^1 with the supporting and vibrating rods P Q, when the same are constructed and arranged as described, and for the purpose set forth.

No. 16,799.—Thomas Hodgson, of Brooklyn, N. Y.—*Fire proof Stone.*—Patent dated March 10, 1857.—The composition consists of six parts, by measure, of the dry sulphate of lime, two parts of granulated granite, and one part of granulated quartz; to every bushel of the above mixture is to be added one-sixteenth of an ounce of sulphate of zinc powder and one ounce of starch powder; all this is to be mixed with a solution of tannin and a solution of sulphate of iron, in about equal quantities. The two solutions of tannin and sulphate of iron consist of half a pound of each to a gallon of water.

Claim.—The useful manufacture of a fire-proof artificial stone, composed of feldspar, mica, and quartz, and the other substances or materials described, in the manner and for the purpose set forth.

No. 16,460.—George W. Bishup, of Brooklyn, N. Y.—*Improvement in Stone-grooving Machines.*—Patent dated January 27, 1857.—The hammer R, revolving on shaft O, strikes first chisel S; and after having passed said chisel, it comes in contact with the chisels S^1 and S^2, striking them both, one after the other. A system of hammers R may thus be arranged on shaft O, to operate a number of chisels set in different rows.

The inventor says: I am aware that revolving hammers or cams have been made use of in stone-dressing machines for operating the chisels, and I therefore do not claim such revolving hammers.

But I *claim* a series of vertical inclined chisels, of different length, placed one behind the other, in combination with a revolving hammer or cam, as described; whereby I am enabled to give a positive motion to all the chisels from a single hammer for each series of chisels, substantially as set forth.

No. 16,878.—Ira Merrill, of Shelburne Falls, Mass.—*Improvement in Machines for Breaking Slabs or Blocks of Stone into Regular Forms.*—Patent dated March 24, 1857.—In using this invention the chisel rack C is adjusted over the stone, the chisels being so placed as to be directly opposite the edges of the sectional spine, vertically. They are then driven against the upper surface of the stone by percussion, the effect of the operation being to produce a lateral strain on the upper surface of the stone, in a direction of right angles to the length of the fulcrum, while the stone is being subjected to the vertical pressure produced by the screws G, and while balanced across the sectional spine; the weight of the stone assisting the force applied, and at the same time to weaken the stone at the time of the greatest strain by

the slight channelling produced by the action of the edges of the chisels so as to break the stone accurately.

The inventor says: I do not wish to be understood as claiming breaking stone by pressure or percussion, or by both combined, independently of the mechanism employed.

But I *claim* breaking stone into regular forms by pressure and percussion, when both are applied at the same time to the slab or block of stone to be broken, by means of the mechanism constructed and arranged as set forth.

No. 16,672.—JUNIUS FOSTER, assignor to JOHN HERBOLD, GEORGE KUHN, and JUNIUS FOSTER, of Brooklyn, N. Y.—*Improved Tile Machine.*—Patent dated February 17, 1857.—The clay is supplied to and pressed into and through the rolling dies K *l* by means of plunger *h*; the rollers K *l* remain stationary, at the time the plunger recedes to take a fresh supply of clay from the hopper *i*, and simultaneously the tile is cut off while stationary, ready to be removed for drying.

The inventor says: I do not claim the plunger *h* in itself. Neither do I claim cutting off the clay or tile with a knife or wire.

But I *claim* the combination of the reciprocating plunger *h* with the rollers K and *l*, slide or trough *o*, and knife or wire 8, when the said parts are arranged for joint operation, substantially in the manner and for the purposes specified.

XVI.—LEATHER, ETC.

No. 17,051.—STEPHEN OLIVER, Jr., of Lynn, Mass.—*Improvement in Boot and Shoe Heels.*—Patent dated April 14, 1857.—In applying this heel to the sole of a shoe, the tenon *b* of the gutta percha part A is inserted through a hole made in the sole to receive it; and by means of a hot iron applied to the tenon, its upper end may be melted or spread down like the head of a rivet, so as to secure the heel to the sole.

Claim.—The manufacture of heels as made by a mould, and, in other respects substantially as specified; that is, with a gutta percha body and tenon, a concave upper surface, and a bottoming of leather, or its equivalent.

No. 18,227.—PARKER WELLS, of Middleton, Mass., assignor to SAMUEL MOWER, of Boston, Mass.—*Improved Boot and Shoe Sole-Cutter.*—Patent dated September 15, 1857.—The leather being secured to pattern *m*, the wheel *g* is rotated, causing the pattern to move on

the guide rollers *j*, and the knife *r*, which is secured to slide *o*, to cut the leather to the desired shape.

Claim.—The combination of a cutter or cutters with a yielding slide, substantially as set forth for the purpose specified.

No. 18,237.—ISAAC A. DUNHAM, of North Bridgewater, Mass.—*Improved Edge Plane for Trimming Boot and Shoe Soles.*—Patent dated September 22, 1857.—In the drawings, *a a* represent a circular plate, of which the cutting blade a^1 forms a part. This cutter turns upon a screw pivot *b*, by which it is secured in any desired position to the stationary stock *c c; d d* is a guard attached to or forming a part of the stock. On this guard, and close to the point of the cutting blade, is a small projection or nipple *e* which, as the tool is moved forward, brings the shaving of leather directly across the edge of the cutter, and thereby cuts it free of the sole or welt. The cutting-blade is brought close to the guard, which slightly overlaps it, as shown, so that it is impossible for the cutter to come in contact with the vamp or upper. It will be seen by hanging the cutter upon a screw pivot *b*, the blade *a* as fast as it becomes worn can be set up to the guard.

The inventor *claims* the new sole or welt trimmer, constructed substantially as described; that is, with a cutting blade and guard, that together form a circle or very nearly, and with the cutter so arranged as to be set up to its guard, as fast as it becomes worn, by simply turning the said cutter on its centre, as specified.

No. 17,408.—STEPHEN THURSTON, of Newark, N. J., assignor to Himself, MARCUS L. WARD, and HUNTINGTON & Co., of the same place.—*Improvement in Machines for Cutting India Rubber, Gutta Percha, and other Boot and Shoe Soles.*—Patent dated May 26, 1857.—A sheet of prepared India rubber is placed upon the feeding cylinder *g;* and as the cylinders *b* and *g* are rotated, pawl *i* is raised from ratchet *h* by cam *n*, when cutter *c* comes in contact with the cylinder *g*, cutting out the sole and causing the cylinder *g* to revolve till the sole is completely cut out. The follower *d*, when the cutter *c* has reached the lowest point of its revolution, is thrust out by cam *e* and drops the shoe sole; and, as the cylinder *b* continues to turn, the eccentric *e* causes the cylinder *g* to back sufficiently to bring the India rubber on cylinder *g* into the proper position for the next cut.

Claim.—In forming the soles of shoes of India rubber, gutta percha, &c., the combination and arrangement of the cutter cylinder and carrying cylinder *g*, substantially as specified, the cylinder *g* being moved forward by the action of the cutters upon it, and moved backward by the eccentric on the cutting cylinder, in the manner and for the purposes set forth.

No. 17,905.—CHARLES WARREN, of Putnam, Conn.—*Improved Edge Plane for Trimming the Edges of Boot and Shoe Soles.*—Patent dated July 28, 1857.—The nature of this invention will be understood by reference to the claim and engravings.

The inventor says: I do not claim broadly the employment of a screw for adjusting the cutters in boot edge planes; nor do I claim broadly the placing of both of the cutters in grooves. Both of these features may be seen in the patent of Hill & Arnold, 1848.

I *claim* as a new article of manufacture a boot edge plane, which has its cutters E E^1 secured between caps C D and a central plate D, substantially as described.

No. 17,603.—WILLIAM BUTTERFIELD, of Boston, Mass., and BRADFORD STETSON, of Uxbridge, Mass., assignors to ELMER TOWNSEND, of Boston, Mass.—*Improved Machine for Skiving Boot Counters.*—Patent dated June 16, 1857.—In operating with this machine, the piece of leather to be skived is introduced between the guides G T, and underneath the pressure springs P M, and so as to enter between the two sets of feed rollers K K^1 and N. The driving shaft B being set in motion, and pressure being applied to bar F, so as to press the levers D downward, and force the upper feed rollers K^1 N down upon the leather, such leather will be borne against the knives O and L, so as to have the two opposite parallel edges chamfered down, as shown at x^1, figure 4.

Claim.—The combination and arrangement of the secondary or adjustable feed roller and skiving cutter with the driving and feeding shafts, and the primary or stationary feed rollers and skiving cutter, the whole being made to operate as specified.

No. 16,670.—J. G. BAKER, Jr., assignor to Himself and CHARLES BRADFIELD, of Philadelphia, Pa.—*Improvement in Boot Crimping Machines.*—Patent dated February 17, 1857.—The nature of this improvement will be understood on reference to the claim and engravings.

Claim.—The combination of the swivelled stay rods U with their cross-heads T and thumb-screws S, when arranged with the former Q, as stated, for the purpose of facilitating the removal of the finished boot front, and the introduction of another piece, as represented.

No. 18,074.—WILLIAM W. WILLMOTT, of Boston, Mass., assignor to Himself and AMOS H. BRAINARD and CHARLES H. BRAINARD, of the same place.—*Improvement in Boot Crimps.*—Patent dated August 25, 1857. The piece of leather cut out to the proper shape is placed upon the jaws C, and the brake B is then brought down and the leather is forced in between the jaws C. The hand wheel P is now turned until the pincers G have descended sufficiently low to allow the points *t* to enter the jaws; until this is effected, the pincers are held down by pawl *p*. This pawl is now tripped, and spring N immediately draws up the block K, tightening the pincers, and raises the latter with a force just sufficient to take up the slack of the leather as the crimping proceeds. The brake B is now worked up and down by hand, until the creases and wrinkles are worked out, and the crimping is completed.

Claim.—First. The device herein described for operating the pin-

cers, consisting essentially of the block K, the screw L, the spring N, ratchet O, and pawl *p*, operating in the manner and for the purpose set forth.

Second. The device herein employed for the purpose of securing the jaws to the stand, consisting essentially of the slit *g* with its shoulders *i*, and the tenon *h* with the shoulders *k*, operating in the manner set forth.

No. 17,067.—WILLIAM W. WILMOTT, of Boston, Mass., assignor to Himself and HENRY F. GARDNER, of the same place.—*Improvement in Boot Trees.*—By turning crank wheel *r*, shaft R is rotated, and the screws M and L will cause nuts *o* to slide on these screws; and as the rollers *n* press against the inner sides of the parts *e* and *f* of the boot tree, said parts will be expanded when the nuts *o* are moved towards the ends of the boot tree. When the nuts *o* are moved towards the centre of the boot tree, the springs I will draw the parts *e f* together.

The inventor says: I am aware that a rod has been used in connexion with jointed levers and nuts for forcing the parts of a boot tree asunder; and I am also aware that a right and left handed screw rod has been applied to a boot tree, to work in combination with rollers, inclined planes, and wedges to force the parts asunder. I do not, therefore, claim such as my invention.

But I *claim* applying the rollers *n n* to curved transverse springs, so that such springs may cause the parts *e f* to give or spring transversely, to correspond with the dimensions of the boot leg, substantially as set forth.

No. 17,947.—WILLIAM UPFIELD, of Lancaster, Ohio.—*Improvement in Boot Trees.*—Patent dated August 4, 1857.—By turning the screw nut H, the distance between the wedges A can be adjusted by reason of the right and left hand screw threads on shafts D E; the wedges A, sliding in grooves C of the pieces 1 and 2 of the boot tree, force said pieces apart by turning nut H, while they also force apart the side pieces F by reason of the inclined planes L resting in the grooves G of the wedges A.

Claim.—1st. The grooves G G cut in wedges A A, the side pieces F F, with inclined planes L L, substantially in the manner and for the purposes specified.

2d. Wedge K, in combination with post I and wedges A A, or their equivalents, in the manner and for the purposes set forth.

3d. Nut H, the right and left screw shaft D and E, wedges A A, or their equivalents, when arranged, combined, and operating substantially in the manner and for the purpose described.

4th. In this connexion, sleeve *m*, in combination with block B, in the manner and for the purpose specified.

No. 17,455.—JOHN SHAW, of Natick, Mass.—*Improved Heel Cutter for Cutting out Heels of Boots and Shoes.*—Patent dated June 2, 1857. The strip of leather from which the heels are to be cut is placed on the knife D E, against the rest H; and as the platen G is depressed, the

heel is cut out at the same time that the knives *a* separate the waste portions from the strip of leather.

Claim.—In the described cutter the cutting wings *a a* extended from it, substantially in the manner so as to remove the waste portion from the strip of leather, while the heel piece is being formed therefrom in manner as specified.

No. 18,152.—JOHN KIMBALL, of Boston, Mass.—*Improvement in Machines for Lasting Boots and Shoes.*—Patent dated September 8, 1857.—The nature of this invention will be understood by reference to the claim and engravings.

Claim.—Combining the toe rest *d* and its clamps F to the attachment plate K, by means of an inclined rod, as described; so that both may be moved together in order, at one and the same time, to clamp the upper to the toe of the last A, and move the toe rest towards the heel post *c* for the purpose described.

No. 17,998.—BENJAMIN F. STURTEVANT, of Boston, Mass., assignor to Himself and ELMER TOWNSEND, of the same place.—*Improved Machine for Pegging Boots.*—Patent dated August 11, 1857.—This machine is an improvement on a similar machine, for which a patent was granted to Sturtevant and Townsend, numbered 17,544. By turning wheel H the lever *g* is caused to vibrate, operating lever *c* on its fulcrum *d*, which by means of pawls *b* operates the conical feed wheel A, and while the awl D is vibrated it passes through the holes of the feed wheel.

Claim.—The bell-shaped feed wheel A, and its arrangement with reference to the awl and peg-wood carrier, and provided with one or more ranges of holes, substantially as described; the awl being made to work at an inclination to the axis of the feed wheel, or from the axis towards and through the rim of the wheel, as described. Also, the above described mode of feeding the shoe along, that is, by the awl or its equivalent, and the feeder wheel, the latter not only assisting in feeding the shoe along by the pressure and action of the ranges of tapering holes, but in holding the shoe in position while the awl is raised out of the sole.

No. 18,594.—W. W. MERRIAM, of Oswego, N. Y.—*Improvement in Patterns for Measuring and Shaping Boots and Shoes.*—Patent dated November 10, 1857.—The nature of this invention will be understood by an examination of the claim and engravings.

Claim.—The method described of operating the sliding parts of an extension pattern, so as to adjust the same not only to different sizes, but also to change the proportions of the several sizes at pleasure without regard to the whole.

No. 17,544.—B. F. STURTEVANT, of Boston, Mass., assignor to Himself, and ELMER TOWNSEND, of the same place.—*Improvement in Machines for Pegging Boots and Shoes.*—Patent dated June 9, 1857.—A detailed description of this invention would take up too much space to be given

here; the principal features thereof will be understood by reference to the claims and engravings.

The inventor says: In combination with the feeder wheel R and its rotary mechanism, a mechanism for imparting to said feeder wheel and the last reciprocating intermittent endwise movement, whereby the pegging of two ranges of pegs may be effected as described.

I do not claim a toothed or corrugated feeding wheel, nor one made with a series of holes for the pegs to pass through or into.

But I *claim* constructing the feed wheel R with two series of radial holes *s t*, arranged in it as specified.

I also claim the stop lever f^2 and its locking slide *h*, in combination with the peg-wood feeding mechanism, and made to operate therewith, substantially as explained.

I do not claim a tubular peg-carrier provided with a cutter, as shown in the patent granted to A. C. Gallaher, August 16, 1855.

I also claim the tubular peg-carrier N, when provided with a cutter for separating the peg from the peg wood, and when arranged and made to operate with the peg-wood feeder and the feeder R, substantially as specified.

I also claim the combination of mechanism for producing a reciprocating intermittent endwise movement of the feeder wheel R, the same consisting of the slider *u*, the stud *v*, the groove *w*, the spring *s*, the pin *c*, the inclined cam d^1, the pin e^1, the tripping clutch f^1, the lever g^1, and the slide rest o^1, the whole being applied together, substantially as specified.

I also claim combining with the mechanism for producing the reciprocating endwise movement of the feeder R, a weighted arm R or its equivalent, applied to the pegging jack, substantially as above specified; whereby the shoe and last are maintained in close contact with the feeder, and permitted to move in correspondence therewith, substantially as set forth.

I also claim the method of effecting the feeding of the peg wood; that is, by the slider M of the peg-carrier, the lever b^2, the serrated feeder Z^1, and the spring d^2, operating together as specified.

No. 18,170.—Seth D. Tripp, of Winchester, Mass., assignor to Himself and Luther Hill, of Stoneham, Mass.—*Improvements in Machines for Pegging Boots and Shoes.*—Patent dated September 8, 1857.—A detailed description of this invention would take up too much space to be given here; the principal features thereof will be understood by reference to the claims and engravings.

Claim.—In machines for pegging boots and shoes, (when the gate which carries the awl and driver is allowed to swing freely in a plane perpendicular to the surface of the sole, or nearly so,) the arrangement and combination of the spring U, the disks P, and a lever *b*, with its toggle joint and connecting rod *c*, and the lever T, for the purpose of bringing down, clamping, and releasing the gate, in the manner set forth.

Second. The feeding pawl b^2, with the spring C^1 and slot d^2, in combination with the holding pawl or bolt f^2, operating in the manner and for the purpose substantially as described; whereby the amount

of feed of the carriage H^1 is regulated, and the latter is held stationary, as set forth.

Third. Regulating the motion of the carriage H^1 by means of the combination of the following devices, or their substantial equivalents, viz: The groove t, pin u^2, dogs x^2 and y^2, stops y^2 and p^2, blocks w^2 and v^2, and guide z^2, operating in the manner set forth.

Fourth. The combination of the devices employed for the purpose of cutting off a portion of the pegs, and for adjusting the throw of the awl and driver to correspond therewith, or their substantial equivalents, whereby the awl and pegs are prevented from penetrating the last, as set forth.

Fifth. The offsets 1 and 2, upon the slides w and x, operating in the manner set forth; for the purpose of causing the driver to descend over the hole made by the awl, as described.

No. 18,879.—WILLIAM WELLS, of Boston, Mass., assignor to EDGAR M. STEVENS, of Boston, Mass.—*Improvement in Machines for Pegging Boots and Shoes.*—Patent dated December 15, 1857.—This invention relates to the means employed in pegging machines to present properly the pegging mechanism to the various curvatures of the work. It consists in a head O arranged to support the action of the peg driver; and the awl will be square, or nearly so, to the surface curvatures of the sole, and to slide and spring for the purpose of conforming to the inequalities and curvatures of the surface and edges of the work to be pegged.

Claim.—The combination of the pegging mechanism, viz: The awl, peg-driver, knife, and peg-carrier, with a head hung or supported substantially as described for the purpose set forth.

No. 18,583.—B. D. GODFREY, of Milford, Mass.—*Improvement in Water-proof Soles and Heels for Boots and Shoes.*—Patent dated November 10, 1857.—Instead of making a half sole, or sole and heel in one, an entire sole piece A is cemented the length of the foot, and to this, at the heel, is cemented a separate heel piece B, as seen in the engravings.

The inventor says: I do not claim making a heel separate from a sole, as this is common to leather shoes.

But I claim the employment of a cast heel of India rubber with an entire sole of rolled or sheet rubber, substantially as set forth, as an improvement in the manufacture of rubber shoes.

No. 18,291.—SAMUEL MIDDLETON, of England.—*Improvement in the Manufacture of the "Uppers" of Boots and Shoes without Seams.*—Patent dated September 29, 1857.—This invention relates to the manufacturing of the uppers of boots and shoes of leather, heretofore either made with seams, by sewing, (technically termed "closing,") or otherwise connecting together the separate or divided parts of the material, and consists in exerting pressure upon lasts or forms acting upon pieces of leather, and made to pass therewith through plates or dies of metal, whereby a flat piece of leather, when acted upon and made to pass as aforesaid, is caused to assume and retain the external shape of such said lasts or forms.

The operation of this machine is thus described by the inventor: The operator first places the leather upon the plate G; he then imparts motion to the wheel *e*, by which the rack *a*, plate K, and last or form *o* will be lowered; and when the plate K has been fairly deposited upon the leather, and previous to the last or form *o* operating thereon, the necessary pressure is exerted upon the leather, as before stated, by the bevelled shoulder 1 of the groove * (shown at fig. 7) forcing the upper part of the piece *f* out of the said groove, the upper part of said piece being firmly held by the under side of the cross piece, fig. 7, which is suitably formed to receive and retain it in the position exhibited; and by these means I cause the pressure upon the leather. The piece A continuing to descend, by turning round the lever wheel *e*, forces the last upon the leather, both of which pass through the hole in the plate or die G, and thus the necessary shape is imparted to the leather without seam or joint of any kind. The upper, thus far shaped, requires to be lasted and cut before being manufactured into boots and shoes.

The inventor says: I am aware that drinking cups and blinds for horses' bridles have been stamped out of leather; therefore I limit my claim to making the uppers of boots and shoes.

I *claim* stretching and forming the upper leather for boots and shoes from a single piece of leather, without seams, substantially as described.

No. 17,524.—James Serimgeour, of Brooklyn, N. Y.—*Improvement in the Manufacture of Boots.*—Patent dated June 9, 1857.—The nature of this invention will be understood by reference to the claim and engravings.

The inventor says: I disclaim any form substantially like that described in the patent of Chilcott & Snell, before referred to.

But I *claim* the cutting out or otherwise forming a piece of leather or other material to the shape substantially as herein described and represented in fig. 1, and the folding of the same as described and illustrated in figs. 2 and 3, to produce the "upper" of a boot, as herein fully set forth.

No. 17,268.—Kasson Frazer, of Syracuse, N. Y.—*Improved Method of Connecting the Cheek-Piece to the Mouth-Piece of Bridle Bits.*—Patent dated May 12, 1857.—The shanks C of the cheek-piece B being inserted within the openings of the chamber E, cast within the bulb at each end of the mouth-piece, the cavity is filled up with melted metal, thus securing the cheek-piece to the mouth-piece A.

Claim.—Constructing cheek-pieces of bridle bits by making a neck at each extremity within the ball of the mouth-piece, and securing the same therein by means of filling the chamber around the necks with metal or other composition, substantially in the manner and for the purpose set forth.

No. 16,374.—George P. Woodruff, of Watertown, Conn.—*Improvement in Buckles.*—Patent dated January 6, 1857.—The pipe-formed stock B of the tongue *a* encloses both the strap D and the bow of the buckle.

Claim.—Constructing and combining together the bow and the tongue of a buckle in such manner that the strap is secured between the two at the hinge of the buckle, substantially as set forth.

No. 17,545.—JOSEPH ZEPFEL, of New York, N. Y., assignor to JOHN B. RADLEY and JOSEPH ZEPFEL aforesaid.—*Improvement in Carpet Bags.*—Patent dated June 9, 1857.—The side frames *b* and *c*, which receive the cover *d* of the carpet bag, are hinged to the bottom *a*, thereby affording the facility of opening the carpet bag all the way down, and the articles to be packed can be placed neatly in this carpet bag, without becoming rumpled or creased.

Claim.—Attaching the half pieces of the divided bottom to the lower corners of the respective frames, at right angles or nearly so to said frames; thereby said divided bottom and frames support the flexible material of which the bag is composed, whether the same is open or shut, as specified.

No. 16,834.—WADE H. HAWORTH, of Philadelphia, Pa.—*Improvement in Machines for Stuffing Horse Collars.*—Patent dated March 17, 1857.—In this invention there are two stuffing rods *m* and *n*: that for stuffing the long straw, designated by *n*, has a forked extremity and *m*, that for the fine straw, has the shape generally shown in the engravings. These stuffers are each secured to sliding head blocks P by set screws *r*, and are moved alternately back and forth. The stuffer *n* has its stuffing end brought within box *e*, and by means of its forked end pushes the long straw through tube m^2 into the roll of the collar. The stuffer *m*, in its back movement, has its stuffing end brought within the feed box *d*, so as to push before it, at each stroke through the tube m^1, the fine cut straw.

Claim.—First. The employment of two stuffers, stuffing against each other from both ends of the collars, when such stuffers are made to recede automatically, as set forth.

Second. The employment of two alternating sets of such stuffers for stuffing both rolls of the collars, as set forth.

No. 17,902.—J. C. TOBIAS, of Lincoln, Ill.—*Improvement in Machines for Stuffing Horse Collars.*—Patent dated July 28, 1857.—By depressing treadle *h*, which turns on fulcrum *i*, the rack G is brought in gear with pinion J, and is held thereto by means of catch *k* on bar *j*. By withdrawing catch *k*, bar G drops down to the position represented in the engraving, and bar H drops in gear with pinion J.

The inventor says: I do not claim, separately or in itself considered, the device formed of the two racks G H, gearing alternately into the pinion J, for the purpose of communicating a rectilinearly reciprocating motion to the rods or plungers from the continuously rotating driving shaft; for such device or its equivalent has been previously used for similar or analogous purposes.

But I *claim* attaching the rods D E to a vertical bar F, which is attached to the slide B and to the racks G H, into which the pinion J, by the means shown, or its equivalent, is made to gear alternately, whereby the stroke of the rods or plungers D E may be cut off at

No. 18,790.—JOSEPH W. BRIGGS, of Cleveland, Ohio, assignor to JUDSON A. LAZELL, of Plainesville, Ohio.—*Improved Device for Fastening Harness Traces.*—Patent dated December 1, 1857.—The operation of this invention is as follows: The cam lever G is thrown back to enlarge the opening between it and the bar F; the trace is then inserted, and when adjusted to the desired location is then turned down, thus decreasing the size of the opening and preventing the passing of the trace when the cam comes in contact with its raised parts, and, as is evident, holding the trace securely in the position in which it may be placed.

The inventor says: I do not claim as my invention the eccentric which presses the trace against curvatures in the bed-plate; neither do I lay any claim to a cam lever in any way.

But I *claim* the raised or elevated parts of the trace C C C C, when used in combination with a cam lever, as set forth.

No. 18,300.—N. PULLMAN, of New Oregon, Iowa.—*Improvement in Awning Frames for Horses, attachable to Harnesses.*—Patent dated September 29, 1857.—In the drawings, figure 1 represents a perspective view of a horse in harness with this improved awning frame attached. Figure 2 represents a plan of the frame and harness united. This frame consists of a series of metallic ribs connected with each other and attached to the harness so as to afford support for any of the various descriptions of covers that are used to protect horses from insects, &c.

The central rib *l* is jointed at *e*, just in front of the back rib, so as to allow the shoulder rib, when released from the collar, to be turned back, in order that the frame may be removed with the remainder of the harness without disengaging its other parts; a series of holes *m* are made through the central rib in order to adjust the length of the frame to harnesses of different size.

The covering rests upon the frame, and is brought up over the head and neck of the horse if desired.

The ends of the loin rib *h* are pivoted to the ends of the crupper rib *k*, which arches over the rump of the horse, extending back to the croup, and is held in this position by a central rib *l*, which extends from the shoulder to the crupper, and to which all the intermediate ribs are attached.

The inventor says: I do not confine myself to the precise arrangement of the parts forming the frame, or the manner in which they are connected with the harness; my invention being, in these particulars, susceptible of various modifications, according to the circumstances in which it is used.

I *claim*, first, arranging the frame for the support of an awning over draught horses with a flexible joint, so that it can be folded back from the head and neck of the horse, and removed with the harness, as described.

Second. Connecting the front bow with the bridle by means of flexible bands, for the purpose set forth.

No. 18,614.—A. J. TEWKSBURY, of Haverhill, Mass.—*Improvement in Last-Holders.*—Patent dated November 10, 1857.—The nature of this invention consists, 1st. In furnishing the wedge P, which confines the lever M of the heel-pin L, with a notched spring by means of which the wedge is conveniently adjusted by hand, and effectually prevented from jarring or starting out of place by the action of hammering or "rubbing down" the sole.

2d. In the use of a spring-bolt G for confining the ball E E in the socket A A, so that the bottom of the shoe shall be held fast in a horizontal position when hammered or rubbed, while at the same time it is free to turn in a horizontal plane on said spring-bolt as an axis; and,

3d. In uniting two parts of the socket A A by means of bolt B and an elastic washer or spring C, for the purpose of adjusting and giving the requisite friction between the ball and the socket.

Claim.—The ball and socket joints A and E in combination with the spring bolts B and G, substantially as set forth and for the purpose specified.

No. 17,160.—BENJAMIN MARSHALL, of Philadelphia, Pa.—*Improvement in Revolving Last-Holders.*—Patent dated April 28, 1857.—By turning the screw-nut W, so as to screw it downward, the arm L will be adjusted to a long or short last by reason of nut W resting constantly on some point of the inclined plane U, thus moving the toe-rest L towards the last by turning it on pivots *h*. The elastic band S serves to counterbalance the arm G as it is revolved.

The inventor says: I claim nothing in the idea of a revolving arm and shaft, or a holder combined with it and the last attached.

But I *claim*, 1st. The screw V and nut W, in combination with the inclined plane U, for the purpose of raising and lowering the toe-rest L and moving it back and forth, all arranged in the manner substantially as set forth.

2d. I claim the combined arrangement of the crank or eccentric R with the revolving shaft F, and the attachment of the elastic band S, or its equivalent, at the wrist *l* and *t*, the set screw *f*, substantially as described.

No. 18,427.—B. F. STURTEVANT, of Skowhegan, Me., assignor to ELMER TOWNSEND, of Boston, Mass.—*Improved Lasting Pincers.*—Patent dated October 13, 1857.—In the drawings, A shows one branch or lever of the pincers detached. The upper end is finished in a claw 1^1; another claw 2^1 is pivoted at *a* and plays in recess *b* formed in the broad part of the branch A. The branch B is furnished with similar claws 1 and 2, pivoted together at *c*; a recess similar to that at *b* is also found in this branch. The short arms or claws 2^1 of the two branches are pivoted together at *f*. This manner of placing the short arms in the recesses *b* allows the inner surfaces of the branches A and B to play in contact with each other.

The inventor *claims* the described compound pincers for lasting boots, constructed and operating in the manner substantially as set forth.

No. 18,310.—SYLVANUS H. WHORF, of Malden, Mass.—*Improvement in Hollow Metallic Lasts.*—Patent dated September 29, 1857.—The process to which this improvement or improvements have particular reference is that relating to the application of soles to boots or shoes by means of pressure and gutta percha or other cement. In the performance of such process, a last constructed of metal and provided with a chamber and pipe, or other equivalent means of introducing steam or heat into the last, has to be employed; a last such as is employed in this process is represented at A in the drawings, the steam chamber being shown at *a*. This invention relates to rendering the last adaptable to lasting and finishing shoes varying in size both in upper and sole. For this purpose a spring is applied to the last at instep C, fixed at or near the toe of the last; the other end of the spring being separate from the last in order that the movable spring instep, or instep spring, may spring towards the last and fit itself to a shoe when the latter is drawn on the last, the spring instep serving to draw the shoe closely down to the sole of the last, whatever may be the size of the upper.

The inventor says: I *claim* making a last with the yielding or spring instep applied to operate substantially as described.

No. 17,471.—ISAIE LIPPMANN, of Paris, France, assignor to MICHEL JEAN ADRIAN GUIET, of New York, N. Y.—*Improved Process of Splitting Leather and Hides.*—Patent dated June 2, 1857.—The hides are first subjected to a pounding and rubbing operation by the machine represented in fig. 1. The hides are placed in the trough *a*, and are operated upon by the vibrating beaters or fullers *b*, which are affixed to the levers *c*, until they are properly softened. The hides are then attached to cylinder A, fig. 2, to which a slow rotary motion is imparted by means of endless screw *i* on the driving shaft *j* and worm wheel K; and the hides are split by means of a long vibrating knife B, actuated by an eccentric on shaft G and pitman H.

Claim.—The method described for splitting skins, and by first submitting them to a fulling or beating action as described, and then, when so prepared, passing them through an apparatus or machine, the cutting apparatus of which has a rapid vibrating motion against which the skin is projected slowly, substantially as specified; by which method of fulling and cutting combined I am enabled more perfectly to split skins than has heretofore been done.

No. 17,576.—PETER E. HUMMEL, of Pulaski, New York.—*Improvement in Machines for Scouring and Setting Leather.*—Patent dated June 16, 1857.—The leather to be operated upon being stretched out upon the revolving bed H, a reciprocating motion is given to the plate B and tools *l* by turning driving shaft E, and the leather is presented to the action of the tools, so that all parts will be properly acted upon by turning the bed H.

Claim.—The revolving table or bed H, in connexion with the reciprocating head formed of the frames *c* attached, in which the shafts *d d* are fitted, the shafts being provided with sockets *k* and adjustable

counterpoises *n*, substantially as shown and described for the purposes set forth.

No. 17,445.—EUGENE L. NORTON, of Charlestown, Massachusetts.—*Improved Process of Manufacturing Leather Shoe-binding.*—Patent dated June 2, 1857.—The prepared leather is cut into narrow strips by means of circular revolving shears; the ends of these strips are united as represented at *c d;* and the strip is then guided between two revolving rollers, one of which is supplied with the coloring matter with which the binding is stained in its passage.

Claim.—The improved process described of manufacturing shoe-binding by dividing the skin or sheet of leather into strips of equal width, joining them at their ends, so as to connect them into one long strip, and coloring the same when so formed; the whole being formed of or reduced to an uniform thickness, and the fleshy or surplus portions of the leather removed by splitting or otherwise.

No. 16,573.—JOSEPH ARMSTRONG, of Woodburn Center, Mass.—*Improvement in Stuffing Leather.*—Patent dated February 10, 1857.—The inventor says: I do not claim the usual process of stuffing a wet hide or skin, in which process the moisture or water in the hide has to be removed by evaporation after the tallow or grease has been rubbed into the hide; nor do I claim stuffing wet hides by a fulling mill, wherein by the percussive force of the beaters thereof the water or tan liquor is more or less forced out of the hides, and the grease simultaneously driven into them, as in this case desiccation of the hides by subsequent exposure to the atmosphere is necessary. Nor do I claim, irrespective of my specific application of it, the use of a press to expel a liquid from an article or substance; nor do I claim the mere use of a peg-lined cylinder for the purpose of impregnating hides with grease: but as I have made an improvement in the process of currying, by which I not only dispense with desiccation of the hides by evaporation induced by exposure of them to the atmosphere during the application of oil or grease to them, but also the handling and working, or labor incident thereto, and perform the operation of expelling the water or tan liquor from them in much less time, comparatively speaking,

I *claim* my improvement in the currying process, the same consisting in employing a press as stated previous to and in connexion with the application of the oil or grease by a peg-lined cylinder, or other equivalent means as set forth, the press removing the liquor and compacting the hide, and the peg-lined cylinder subsequently restoring or plumping it, and impregnating it with grease as explained.

No. 17,554.—DEXTER H. CHAMBERLAIN, of West Roxbury, Mass.—*Improved Rigid Hoop-Knife for Splitting Leather.*—Patent dated June 16, 1857.—In operating this implement the knife-hoop D is rapidly and steadily revolved in a plane at right angles to its edge, it being guided by the bevelled rollers E, the edge of the hoop being drawn over a table C, at the proper distance above it, said table resting on the ways B.

Claim.—The described rigid and bevelled hoop-knife for splitting leather, operating in the manner substantially as set forth.

No. 18,441.—ADOLPH R. E. FALCK and PAUL STOERGER, of Newark, N. J.—*Improved Machine for Striping Leather, &c.*—Patent dated October 20, 1857.—In operating this machine the leather is placed under the guide frame or tracks (which is raised from the table far enough to allow it to pass freely) and beneath the pencil brushes G, which are in immediate contact with the upper surface of the leather when the machine rests on all four wheels, the forward or small brush wheels B^1 C^1 being much smaller than the driving or main wheels B C. The person operating the machine takes hold of the handle D, and sufficiently raises the forward trucks or wheels B and C to run the machine to the far end of the track, being careful not to let the brushes touch the leather; then let the machine rest firmly on all four wheels, and place the thumb firmly upon the lever E, at the same time draw back the machine by the handle, and the operation is completed.

The inventors say: We do not confine ourselves to form of pencil brush or to tubes; either one may be changed to suit the occasion and application.

Neither do we confine ourselves to any limited number of brushes or tubes.

We do not claim to be the inventors of the individual or separate parts of the described machine for drawing parallel right lines.

We *claim* the double tubes or pencil holders G, G, G, and G^1, dampers *w*, *w*, *w*, and mixers *t*, *t*, *t*, arranged and operated by the levers E *i* and connecting rod H, which is attached to the wheel B, in the manner and for the specific purpose, substantially as described and shown.

No. 16,345.—SETH WARD, Princeton, Ind.—*Improvement in Riding Saddles.*—Patent dated January 6, 1857.—The nature of this invention will be understood by reference to the claim and engraving.

The inventor says: I am aware that riding saddles with suspension seats are not new; also, that metal springs have been employed in such saddles in various ways, for the purpose of giving elasticity to the seat; therefore I do not claim broadly the suspension of the seat, nor the making of the same elastic.

Nor do I claim the motion of the seat, nor the motion of the cantle, nor the hinges; for these devices are all shown in John C. Fr. Salomon's tree, patented November 18, 1851. Neither do I claim any device embodied in Mr. Salomon's patent.

But I *claim* the application of an India rubber spring to the back part of the cantle, secured above and also below the semi-circular opening of the cantle by screw plates *a* let in, operating in manner described, and for the purpose of obviating the necessity for any springs either under the seat or cantle, it in itself giving sufficient elasticity to the seat, as shown.

No. 18,771 —JOSEPH RUDISILL, of Natchez, Miss.—*Improvement in Riding Saddles.*—Patent dated December 1, 1857.

The inventor says: I do not claim a spring-seat saddle broadly; neither do I claim having the foundation of the cantle hinged to the tree and rendered capable of yielding by a rubber spring, as in the patent of Seth Ward, 1857. Neither do I claim broadly a spring arranged at the head of the tree for assisting in rendering the seat elastic.

But I *claim* the peculiar arrangement of a series of light flat springs *a a*, in a circular line around the upper side of the cantle foundation B of the tree A A, for use in combination with the coiled spring G, as peculiarly arranged under the head C of the tree; said springs being actuated simultaneously by means of the seat E and webbing or foundation D, as and for the purposes set forth.

No. 16,566.—ROBERT SPENCER, of New York, N. Y.—*Improvement in Ladies' Riding Saddles.*—Patent dated February 3, 1857.

The inventor says: I do not limit my claim of invention to such special modes of application, as other equivalent modes may be substituted.

I *claim* placing the pommel or head back of the front edge of the bars, and in a diagonal position, substantially as described; whereby I am enabled to depress it to give ease of position to the rider without interfering with the horse's withers, as described.

I also claim connecting the near or short horn with the tree by a screw on the end fitted to a series of holes; so that its position, relatively to the seat and pommel, may be shifted at pleasure to suit the rider, as described.

And, finally, I claim the arrangement of the stirrup leather, substantially as described, in combination with what are known as the Mexican bars *a b*, substantially as above described; whereby I am enabled to make a secure ladies' saddle without the use of the points heretofore employed for embracing the sides of the horse, as set forth.

No. 18,246.—JAMES NEIL, of Yorkville, N. Y.—*Improvement in Stirrups for Riding Saddles.*—Patent dated September 22, 1857.—In the drawings A is a cross-piece which is held by the strap. B is a rivet or screw which allows the piece A to work easily in the joint. C is the pin which holds the end of the cross-piece firmly until the piece D is drawn back by the foot being caught in the stirrup. When the piece D is drawn back by the foot, the pin C must draw out and liberate one end of the piece A, thus causing the stirrup to fall along with the foot from the strap. The piece D is kept constantly *out*, and the pin C constantly *in*, by spiral spring *s*. It is necessary that the piece D F should work freely at the joints E; and for that purpose the stirrup may be provided with any suitable projections, such as those marked G, either outside or inside the pieces F, through which a pin may go.

The inventor says: I *claim* the extension piece, or lever D D F F, arranged and applied to the stirrup; so that when the rider falls, his foot (if it remain in the stirrup) shall operate the said extension piece or lever D F, so as to free one end of the bar A, and thus release

the stirrup from the stirrup-strap, substantially in the manner as set forth.

No. 16,917.—ALANSON HASKELL and WILLIAM P. HASKELL, of North Brookfield, Mass.—*Improved Machine for Manufacturing Shoe Lasts.*—Patent dated March 31, 1857.—The operation of this machine is as follows: The operator takes the last, as turned, and holding it with the sole upward places the heel between the guides H, steadying it on the rest G, presses it against the cutter E, at the same time turning it to the right and left. The guides H having been set so as to allow only the stub-shot to project to the cutter, they give the true curve horizontally, and the concave of the head C gives the other. Then placing the last on the slide P, he moves it by the saw *a*, cutting it the proper length; and then placing it, with the sole up, under the piece N, so as to just touch the head D, the bent lever J being square to the plate I, and a pattern on the slide K, which is adjusted according to the number of the last; the placing it higher giving, by the peculiar construction of the lever J, a broad toe, and placing it down giving a narrow one.

Claim.—The use of the concave head in connexion with the adjustable guides and rest, when constructed and operating substantially as described.

Second. So constructing and hanging the bent lever, or its equivalent, as to allow the same pattern to be used for the different sizes, the position of the pattern governing the size, substantially as described.

Third. The combination of the lever J, plate I, and cutter-head, when constructed and operating substantially as set forth and described.

No. 16,659.—NATHANIEL H. SHAW, of Farnworth, N. H.—*Improved Machine for Splitting Shoe Pegs.*—Patent dated February 17, 1857.

The inventor says: I do not claim the combination of a splitting knife with a fluted feeding roller, or its equivalent, being aware that such has before been claimed.

But I *claim* the feeding blade G, when arranged substantially as described, whereby its movement is produced and adjusted to suit all the requirements of the machine under all circumstances in the most simple and perfect manner.

I also claim the arrangement of the holding bar E in such a manner as to enable its motions to be produced without interference with the alternate action of the splitting knife and feeding blade, and to be adjusted for the different sizes of pegs so as not to disarrange the relative positions and movements of said holding bar, splitting knife and feeding blade, substantially as specified.

No. 17,399.—OTIS B. WATTLES, of Waddington, N. Y.—*Improved Tanning Apparatus.*—Patent dated May 26, 1857.—This invention consists in fastening the hide *e* in a vertical position in the frame C by means of thongs F. The frame and hide are lowered down into a

tanning vat in a vertical position by means of a windlass A, and can be elevated in the same manner after having been exposed a sufficient length of time to the tanning liquid.

Claim.—The hides laced in the frame entirely around its border, and sustained vertically in the vat, in the manner set forth.

No. 16,355.—EDWIN DANIELS, of Lafayette, Wis.—*Improvement in Tanning Hides.*—Patent dated January 6, 1857.—The nature of this invention will be understood by reference to the claim and engraving.

Claim.—I am aware that saltpetre and alum have before been used in different proportions in other processes for tanning leather; and I am also aware that sulphuric acid has been used in various ways, in other processes for tanning.

I claim the use of saltpetre, alum, and sulphuric acid, respectively, in solutions of catechu or other substance, containing an equivalent amount of tannin, substantially in the proportions, order, and manner specified.

No. 17,043.—DAVID H. KENNEDY, of New Alexandria, Pa.—*Composition for Tanning Hides.*—Patent dated April 14, 1857.—This composition consists of twenty-four pounds of valonia, eight pounds of sulphate of soda, four pounds of sulphate of magnesia or sulphate of potash, one pound of sulphate of alumina, two pounds of sal soda, one pound of borax, which are dissolved separately in hot water or in a hot decoction of tan bark to form the tanning liquor.

Claim.—The combination of valonia, the sulphate of soda, sulphate of magnesia or sulphate of potash, and sulphate of alumina, sal soda, borax, or boracic acid dissolved in water or tan bark liquor, for the purpose of tanning hides and skins, substantially as set forth.

No. 18,599.—KINGSLEY R OLMSTEAD, of Chicago, Illinois —*Improved Lateral Feed Motion for Sawing Mills.*—Patent dated November 10, 1857.—The object of this improvement is to produce the se or movement of the log towards the saw by self-acting apparatus or machinery, so that the mill shall be a self-setting mill, and the set o the log to any desired thickness be accomplished by mechanica means.

In the engravings A is a frame containing the saw, arbor, shafts, and bevelled gear; B the frame of the carriage; C C the rails or tracks upon which the carriage wheels move by means of the rack D on the bottom of the carriage, meshing into the pinion E on the carriage shaft F protruding from the saw frame. The saw S is secured upon the shaft G in the usual manner, and is driven by a band passing around the pulley H, and put in motion by any motive power.

Upon the rod J is a lever U, movable around the rod except when the cam or eccentric V fixed in the lever next to the set rod clutches the rod as the lever is raised upward. The inclined plane W is the plane with an adjustable incline, so placed that the lever U, as the carriage passes the plane, shall come in contact with the plane, and shall pass up the incline as the carriage passes one way, but shall, as the carriage passes the other way, fold up by means of a hinge or

lever. The incline of the plane is raised or depressed by a screw and lever.

Claim.—The combination of a lever and cam or eccentric with an inclined plane, set rod, wheels, and racks, constructed, arranged, and operated, substantially in the manner and for the purposes set forth.

No. 18,046.—CHARLES H. HINCKLEY, of Stonington, Connecticut.—*Improved Method of rendering the Mouths of Trunks, Mail-bags, &c., water tight.*—Patent dated August 25, 1857.—The nature of this invention will be understood by reference to the claim and engravings.

The inventor says: I am aware that the expanding jointed clasp was patented by Sellers & Pennock, June 12, 1840; and that India rubber packing has been used in various forms, other than that of the inflated ribs for securing water-proof joints; and that separate tongued and grooved jaws or clasps for crimping in the material of the bag, and thus forming a water-tight connexion, were patented by Robbins & Allen, September 7, 1852, but without the inflated ribs But neither of these do I claim.

But I *claim* the application of the inflated casements or ribs *i h* as described, composed of India rubber or other suitable material, to the sides of contact of clasps for bags or cases, so that by their yielding contact the clasp may be closed so as to be impervious to water.

No. 16,336.—HENRY LOEWENBERG, New York, N. Y.—*Improvement in Travelling Trunks.*—Patent dated January 6, 1857.—To extend this trunk the cover is taken off, the front and rear portions L and M are then lifted from their positions represented in fig 2, and the end pieces N and O are raised to perpendicular positions, when they strike against the clasps P, and are held in place by catch springs C. The rods H on the bottom are then drawn out from the staples, releasing the plates E, which rise by force of their springs and raise the pins R from holes I. The trunk can then be extended to about double its length by drawing apart.

Claim.—The combination of the folding portions L M N O with the grooves and tongues A B, and fastenings to make an extensible trunk, in the manner substantially as described.

No. 17,617.—EUGENE BLATTNER, of Philadelphia, Pa.—*Improvement in Machines for Polishing Rawhide Whips.*—Patent dated June 23, 1857.—The dry twisted thongs are attached at one end to the hooks of the spindles *d*, and at the other end to the hooks of the spindles *m*, the spiral springs *q* pressing the thongs against cylinder I. Rotary motion is now imparted to shaft H and roller I, and to the spindles *d* and *m* by means of pulleys L and J, causing the twisted strips to revolve as they are being operated upon by the grinding surface of the roller *l*.

Claim.—I do not confine myself to the precise means described of driving the hooked spindles, as that may be accomplished in a variety of ways.

But I *claim* the grinding pulley I, and spindles *d* and *m*, when a simultaneous rotary motion is imparted to the same, and when they

are arranged for joint operation, substantially in the manner set forth and for the purpose specified.

No. 17,133.—CHARLES BAEDER, of Brooklyn, N.Y.—*Improved Method of Manufacturing Rawhide Whips.*—Patent dated April 28, 1857 — The nature of this invention will be understood by reference to the claim and engravings.

Claim.—Constructing rawhide whips without a core of filler, and giving the wrappers a slight twist, as shown and described.

XVII.—HOUSEHOLD FURNITURE, ETC.

No. 18,476.—NATHANIEL THOMAS, of East Dixfield, Me.—*Apple Slicer.*—Patent dated October 20, 1857.—This invention is operated as follows: The apple on the fork *c*, shown by the dotted circle, being pared, the frame B is shoved on the ways *a a*, and the arbor C is moved longitudinally; the apple being forced between the two sets of knives *f*, and having its opposite sides completely sliced, each knife cutting a slice the thickness of the pieces, being equal to the spaces between the knives. The upper and lower parts of the apple are sliced in a similar manner by the knives *i*, as the apple is shoved between them, and a square core is left on the fork, which core enters the tube *h*, and the curved end of the spring plate *j* passes behind the core, and as the arbor is drawn back retains the core, or prevents it from following the fork. When the second or succeeding apple is sliced, its core forces its predecessor out of the tube *h*.

The inventor says: I am aware that apple slicers and corers have been made, which consisted of a tube having straight knives placed radially within; an example is seen in R. Mitchell's patent, April 18, 1838, and I therefore disclaim them.

I *claim* the construction of apple slicers, in the manner described and represented.

No. 17,484.—CHARLES F. BOSWORTH, of Petersham, Mass.—*Improvement in Machines for Paring, Coring, and Quartering Apples.*—Patent dated June 9, 1857.—The apple to be pared being placed upon fork F, fork shaft D is turned; and as the screw *a* is in gear with rack *b*, the shaft D and the apple thereon are moved forward, causing the paring knife *d* to operate upon said apple. As the operation continues, the fork enters the hollow corer A, fixing the apple upon said corer; the fork F is then moved backward, and a new apple is placed thereon, and the operation repeated until the corer A has the apples placed over its entire length, when these apples are pressed against the quartering knives B and E by the apple on the fork F.

The inventor says: I do not claim broadly paring, coring, and quartering an apple by machinery.

But I *claim*, in combination with the stationary quartering and coring knives, the fork shaft, when so arranged in relation to each

other and to the mechanism operating the machine, that it shall steadily propel the apple in the direction of, and while revolving upon the axis of the corer, whereby one or more apples may be graduated and cored, while another is pared.

No. 16,417.—D. H. WHITTEMORE, of Chicopee Falls, Mass.—*Improvement in Machines for Paring and Slicing Apples.*—Patent dated January 13, 1857.—By turning the shaft A, the screw C draws the slide J along, bringing the paring knife K against the surface of the apple on fork B; the spring I holds it there sufficiently to pare, but yields and allows the knife K to pass around the apple so as to present the edge constantly to the apple; the knife O following the knife K, and slicing the apple into one spiral slice.

The inventor says: I do not claim the peculiar form or arrangement of the parts.

I *claim*, first, so arranging the slicing knife that it shall cut the apple into a continuous spiral slice, as set forth.

Second. So combining the parer and slicer with each other, that the operation of the two shall be simultaneous, as set forth.

No. 16,517.—CLARISSA A. HUBBARD, executrix of GUY H. HUBBARD, deceased, late of Shelburne Falls, Mass.—*Improvement in Machines for Paring and Slicing Apples.*—Patent dated January 27, 1857.—The action and construction of the slicer are as follows:

To the standard B is hinged at N^1 an arm N sustaining the cross gauge head P, to which is affixed the curved knife O, in such position that the edge thereof alligns near the axis of the fork K, and swings upon the hinge at N^1. A tripping post M is attached to the clamp A, which, on careening the machine to the left, comes in contact with the pin L passing through the shaft of the loop gear H, and causes the partial rotation of the loop gear H, and thereby withdraws the end of the rack bar G from the scroll F, thus permitting the backward rotation of the crank and driving-wheel, together with the fork and apple. The machine being now careened to the left, as described, and the pared apple remaining upon the fork, the arm N with the slicing knife O attached is swung by the left hand, and the knife pressed lightly against the apple, which is thereby cut during its backward rotation into one continuous slice, leaving only the core in cylindrical form upon the fork.

The inventor says: I do not claim the cutting of apples into continuous slices or ribbons, nor any formation of slices to prevent their close packing while drying. Neither do I claim nor confine myself to any particular curvature of the knife O, nor the application of the arm N and knife O to the particular machine represented.

I *claim* the arrangement of the machine with its paring and slicing knives, in such a manner as to careen upon the point B^1, in the manner and for the purpose substantially as set forth.

No. 17,901.—R. W. THICKINS, of Brasher Iron Works, N. Y.—*Improvement in Machines for Paring and Slicing Apples.*—Patent dated July 28, 1857.—An apple V being placed on each end of the forks R,

the crank G is turned, and the arbors Q, together with the apples, are rotated, and one apple is pared by means of knife *l*, which is passed around said apple by the arrangement of screw shaft F, rod I, rack J, and toothed sector K. When the apple is pared, the head P is turned and a fresh apple is exposed to the knife *b*, while the pared apple is being sliced by the cutter *e*, which is actuated by screw shaft F. In turning the head P the flanch r^1 of the tube *s* is forced against the flanch *v*, thereby stripping the core from the fork R.

The inventor says: I do not claim broadly paring and slicing apples at one and the same time, for implements for effecting the same purpose have been previously invented.

But I *claim* the two arbors Q Q attached to the rotating head P, when used in connexion with the screw shaft F, collar *c* with arms *h d* attached, the rack J, and geared segment K to which the knife arm L is attached, the above parts being arranged substantially as shown for the purpose specified.

I do not claim separately, or in themselves considered, the employment or use of sliding tubes placed over or on the forks for the purpose of automatically discharging the cores therefrom for such tubes have been previously used, and the same may be seen in the paring machine patented by J. D. Seagrave, April 18, 1854. I therefore distinctly disclaim all parts or arrangement of parts covered or claimed by said Seagrave, and I confine myself to the precise arrangement and combination of parts specifically as shown and described.

What I do claim, therefore, is the sliding tube S and lever U, with curved arms *v* attached, when combined with the arbors Q Q, arranged as shown, so that by the same movement of the head P the several parts are made to work automatically as set forth.

No. 16,443.—Jared O. M. Ingersoll, of Ithaca, N. Y.—*Improvement in Machines for Paring Apples.*—Patent dated January 20, 1857.—Rotary motion being given to shaft D, the wheel G is rotated and the pins *a* impel shaft M forward, carrying with it the swing frame H. by which means the knife in knife-holder I is made to traverse from the stem of the apple to the blossom, the apple being stuck upon fork E. When the pin *a* slips from rod M, the knife is instantly brought back to its place of starting by the spring N.

Claim.—I do not claim the automatic movement of the knife or the various devices connected therewith, which are in common use, but confine myself to the specific claim, viz:

The peculiar form of the rod M, operated by pins on the face of the wheel G, in connexion with the transverse bar P, arranged and operated substantially as described.

No. 16,666.—David H. Whittemore, of Worcester, Mass.—*Improvement in Machines for Paring Apples.*—Patent dated February 17, 1857.—The slide I moves upon rod F and receives motion from screw thread D upon shaft A, the end of arm K projecting from the slide being held in the screw thread by means of guard G. Both ends of the guard are properly cut out so as to allow the arm K at either end

of its motion to follow the impulse of spring P, and to tilt, thereby moving the slicing knife O away from the core of the apple.

Claim.—First, giving the slide I, with its slicing knife attached, a curved or lateral motion, for the purpose of enabling the slicing knife to leave the core in a shape for the easy removal of the apple by means substantially as set forth.

Second, the arrangement consisting of the travelling knife carriage I, with its tilting lever K, playing over the guard G, which keeps the lever engaged with the screw while the apple is being pared, and releases it for the free return of the carriage, as set forth.

No. 16,843.—B. F. Joslyn, of Worcester, Mass.—*Improvement in Machines for paring Apples.*—Patent dated March 17, 1857.—The apples are placed, one at a time, on the fork D, and the cutter I is pressed against the apple by the spring H. The knife is first placed against the outer end or part of the apple, and the nearer wheel *j* is made to penetrate the apple a short distance by means of the spring L on its rod *f*. A rotating movement is then given to the mandrel C, and as the apple rotates it is pared by the cutter I, the apple being fed along the cutter by the wheels *j*, which being placed in an oblique position with the axis of the apple give the feed motion to the apple, the mandrel sliding in its bearings.

Claim.—The spurs *j* either rotating or stationary, attached or connected to the cutter rod and placed obliquely or angularly with the apple or its axis of rotation, when said spurs are used in connexion with a sliding mandrel C, substantially as shown and described, for the purpose of feeding the apple to the cutter, as set forth.

No. 16,993.—J. J. Parker, of Marietta, O.—*Improvement in Machines for Paring Apples.*—Patent dated April 7, 1857.—The operation of this machine is as follows: The apple to be pared, shown in dotted lines, is placed upon fork *i*, and the wheel B is turned so that knife G will be at the outer end of the apple, the arm B by its elasticity causing the knife G to press against the apple so that it will be properly pared. The knife will yield so as to conform to the inequalities of the apple, and is allowed, owing to the peculiar connexion of of the stock F with the arm D, to turn a requisite distance on the arm so that it will always adjust itself in a proper relative position with the apple.

The inventor says: I disclaim any special peculiarity in the knife arm. I do not claim broadly the employment of a spring for allowing a yielding motion to the knife stock, an example of such use of a spring is seen in the patent of E. L. Pratt, April 29, 1856.

But the combination of the spring holder H with the arm D is, to the best of my knowledge and belief a new combination, possessing peculiar virtues, and productive of new and useful results.

Therefore, I *claim* the combination of a spring holder H with the knife arm D, in the manner and for the purposes described.

No. 17,282.—J. F. Keeler, of Cleveland, O.—*Improvement in Bed Bottoms* —Patent dated May 12, 1857.—The nature of this invention will be understood by reference to the claim and engravings.

Claim.—The eyelets E and H, and the cords D, with or without the springs F F, connectea with the rails and arranged in relation to the slats B substantially in the manner and for the purpose set forth.

No. 17,605.—GEORGE W. DOW, of Lynn, Mass., assignor to Himself and WALTER F. FRENCH, of the same place.—*Improvement in Spring Bed Bottoms.*—Patent dated June 16, 1857.—The nature of this invention will be understood by reference to the claim and engravings.

The inventor says: I do not claim supporting a set of slats on springs arranged longitudinally in a bedstead or frame.

But I *claim* my improved spring bedstead or bed bottom as made with two series of rests or bearers B B, two elastic bands or belts C C^1, and a series of transverse bars or slats D D, arranged together and in the bed frame substantially as described.

No. 18,357.—HENRY T. SMITH, of Washington, D. C.—*Improvement in Spring Bed Bottoms.*—Patent dated October 6, 1857.—In this improvement the upper ends of the longitudinal slats *a* are kept in place and connected with each other by a trasnverse slat *k*, which prevents one side of the elastic bottom from sinking lower than the other when the weight on the sides of the bed is unequal. Straps *l*, attached to each side of the spring bottom and also to the side rails of the bedstead, prevent the bottom from springing up and becoming displaced when relieved from the weight of the bed.

The inventor *claims:* Sustaining the slats forming the spring bottom at and near one end, leaving the remainder of the length of the slats unsupported, by which means they form a series of elastic springs for the support of the bed.

No. 17,558.—D. STRINGHAM DUNNING, of New York, N. Y.—*Improvement in Invalid-Bed Elevators.*—Patent dated June 16, 1857.—This implement is used by attaching a sacking L, which is placed underneath the bed of the invalid, to the bars C, and the bed and invalid may be raised by turning shaft J. The bed may be inclined by shifting pulleys *k*, and adjusted to suit the convenience of the occupant.

Claim.—The jointed bars C C connected by the cross-pieces D D, the cranes B B attached to the upright A, the winches formed of the sliding pulleys K K and gear G I, the ropes or chains *i* attached to the pulleys *k* and cross pieces D of the bars C, the whole being combined and arranged substantially as shown and described for the purpose set forth.

No. 18,189.—GEORGE H. CLARK, of Pontiac, Mich.—*Improvement in Invalid Beds.*—Patent dated September 15, 1857.—When the patient requires the use of the chamber vessel, the head end of the mattress J is lowered, and slide M, which is hung in brackets N, is slid towards the foot of the bed to support the vessel, which is placed in the hole of the slide M.

Claim.—The construction and arrangement of parts described, by which the head end of the foot portion of the bed is made capable of

being lowered away from the patient, substantially as and for the purpose set forth.

Also, combining with said arrangement the slide M attached to the frame to support the vessel, as set forth.

No. 18,902.—SAMUEL HICKOCK, of Buffalo, N. Y.—*Improvement in Bedstead Slats.*—Patent dated December 22, 1857.—In the engravings a bed is represented with one of these improved slats. It sits in recesses G G in the rails H H; six or eight of these are required to make a set for one bedstead. These spring laths can be used either side up, and may be reversed when it is necessary to straighten them.

Claim.—Two laths, A and B, placed parallel with each other, and one above the other, and connected or fastened together at or near the centre, constructed and used with or without the spiral springs, substantially as described.

No. 17,695.—CHARLES ROBINSON, of Cambridgeport, Mass.—*Elastic Loop for Suspending Bedstead Slats.*—Patent dated June 30, 1857.—The nature of this invention will be understood by reference to the claim and engravings.

Claim.—An elastic self-attaching loop for bedstead slats, substantially as specified, as a separate article of manufacture not heretofore known.

No. 19,008.—CHARLES T. YOUNG, of North Chelmsford, Mass., assignor to Himself and HENRY CROWTHER, of Lowell, Mass.—*Steam Spring Bedstead.*—Patent dated December 29, 1857.—In constructing this improved bedstead there are made four couplings, as seen at C, with a perpendicular hole through each sufficient to be passed up on to, and be secured in, any desired position to the posts B, by means of the set screws O; these couplings are connected together crosswise of the bed by the tube N, which is screwed into them steam tight, and which constitutes the head and foot or cross rails of the bedstead. The long rails are seen at A, and are likewise hollow metal tubes, and are fitted tight to holes formed in the coupling C.

The inventor says: I do not claim constructing bedsteads of metallic tubing, as such is old and well known.

I *claim* the rods I connected to the end rails N, when these rails and the side rails A are connected by a common coupling to the bed post, arranged as and for the purposes set forth.

No. 17,569.—PETER HINDS, of Kendall's Mills, Me.—*Improvement in Bedsteads.*—Patent dated June 16, 1857.—In figure 1 this bedstead is represented in its horizontal position. The bedstead can be turned up into a vertical position by turning it on pivot Z of the foot B, said foot being kept in a vertical position, as represented in figure 2.

Claim.—A turn-up bedstead, constructed substantially as described, with two sets of sockets in its bed posts, and with movable or secondary posts, provided with connecting levers or bands, by which, when the bed is turned up into a vertical position, the bedding may be maintained in place, as specified.

No. 16,946.—JOHN T. GARLICK, of New York, N. Y.—*Improvement in Life Preserving Bedsteads and Sofas.*—Patent dated March 31, 1857.—This bedstead is fully illustrated in the engravings, and is intended to be used on vessels instead of the berths used heretofore, so that each passenger may have one at his disposal in case of accident.

Claim.—Air and water tight bedstead, settee, or sofa, constructed and arranged in the manner described and for the purposes set forth.

No. 17,818.—ETHAN WHITNEY, of Boston, Mass.—*Improvement in Bureau Bedsteads.*—Patent dated July 14, 1857.—The nature of this invention will be understood by reference to the claim and engravings.

The inventor says: I do not claim so applying a bedstead to a wardrobe or case as to enable the said bedstead to be turned on hinges or their equivalents, from a vertical position in the case to a horizontal position, so as to project from and out of the case.

Nor do I claim, when separately considered, making a bedstead in two parts hinged together, or making a bedstead or part of the same to slide into a sofa frame by means of guide grooves and projections applied to the same, as represented in the patent of A. Walker, dated July 29, 1842.

But I *claim* a bedstead as constructed substantially as described, viz: with the bedstead portion made in two parts, hinged together as described, and applied to the case by projections K K, and grooves *d d*, arranged as specified; in order that the said bedstead may be either folded together and slid back into the case, or be drawn forward and out of the case and unfolded or let down into a horizontal position, as circumstances may require.

No. 16,647.—BENJAMIN HINKLEY, of Troy, N. Y.—*Improvement in Folding Bedsteads.*—Patent dated February 17, 1857.

Claim —In portable folding bedsteads, connecting and bracing the folding portions and intermediate legs by the double cog hinges attached to the side rails, and having their bearings in the intermediate posts, substantially as set forth.

No. 17,281.—JAMES A. JOHNSTON, of Antrim, O.—*Improvement in Folding Bedsteads.*—Patent dated May 12, 1857.—This bedstead is represented in its various positions in the engravings, when placed in the position it usually occupies when used as an invalid bedstead, and when folded up so as to render it easily removable.

The inventor says: A bedstead has been in use with joints in the end rails, having the side rails let in by a dovetail mortise, and capable of folding only the ends together; this I do not claim.

But I *claim* the accommodating brace C in combination with the stay-block D, and hinged jointed rails B, and posts A; for the purpose of forming an invalid or other bedstead as required, and easily removed without being taken apart, either in whole or in part.

No. 17,460.—JOHN B. WICKERSHAM, of New York, N. Y.—*Improvement in Folding Bedsteads.*—Patent dated June 2, 1857.—When this bedstead is unfolded, the weight and strain on bar B are taken on the

shoulder *a*, thus relieving the pins 2 and 5, which merely hold the bar B to the head or foot-board A.

The inventor says: I do not claim a fold-up bedstead, neither do I claim securing the side rails by the insertion of a pin through two holes.

But I *claim* securing the side rails in place, when the bedstead is in an unfolded position, by the combined operation of the shoulder *a* and pin 5 inserted above the rail, substantially as and for the purposes specified.

No. 18,565.—Henry F. Vandenhove, of New York, N. Y.—*Improvement in Folding Iron Bedsteads.*—Patent dated November 3, 1857.—By this invention, the side rails are applied to the bedstead so as not to prevent its being folded less compactly than usual, and the posts D by means of the buttons *f* and the curved grooves and pins *f*, are secured firmly in a vertical position; the buttons may be easily adjusted.

The inventor says: I do not claim broadly a bedstead connected by joints, so that when not in use the parts may be folded together; as such bedsteads are well known and in quite common use.

Neither do I claim separately or in themselves considered the guards or fenders, independent of the manner in which they are arranged or applied to the bedstead.

But I *claim* applying or attaching the guides or fenders to the bedstead, as and for the purpose set forth.

I further claim attaching the buttons *f* to the side pieces *b*, and also attaching the pins or stops f^2 to the side pieces *b*, in connexion with the grooves f^2 in the inner sides of the posts D, for the purpose specified.

No. 18,968.—Royal Hatch, of Strafford, Vt.—*Improved Spring Bottom Bedsteads.*—Patent dated December 29, 1857.—This invention consists in attaching the ends and sides of a canvass or sacking bottom to the end and side rails A A and B B of a bedstead, by means of spiral springs F, arranged so that an elastic or flexible body is obtained.

Claim.—Stretching the sacking bottom G upon springs F, all in the manner substantially as described.

No. 17,047.—James S. McCurdy, of New York, N. Y.—*Improvement in Wardrobe or Bureau Bedsteads.*—Patent dated April 14, 1857.—The leaf B, sliding-frames *c*, and folding-legs *a*, which compose the bedstead, may be drawn and folded up within the bureau A when not used.

The inventor says: I do not claim constructing a bedstead that may be folded up into the form of a bureau, irrespective of the particular means by which that is effected, as several forms of bureau bedsteads have before been made.

But I *claim* the combination of the leaf B, and slatted sliding-frame *c c*, and folding-legs *a a*, constructed, arranged, and operated in the manner and for the purposes set forth.

No. 18,597.—JAMES NAUGHTEN, of Cincinnati, Ohio.—*Machine for Cutting Bread.*—Patent dated November 10, 1857.—The dotted lines in figure 2, represent the swinging and gauge plates when in a position for discharging the bread cut from the machine, and the other position represented of the swinging and gauge plates *h* and *g* is that assumed when the machine is in the act of cutting a slice of bread.

Claim.—The arrangement of the swinging plate *h h*, gauge plate *g*, and set screw C, when arranged with the spring 5, and curved lever J K, for gauging the thickness of the slice of bread cut, and discharging it from the machine by the action of the lever *f f*, on the curved lever J K, all as and for the purpose specified.

No. 16,877.—SAMUEL MASON, of Indian Springs, Md.—*Improvement in Clamps for Brooms.*—Patent dated March 24, 1857.—A represents the box part of a metallic clasp, to which is hinged piece B, which, when shut down, encloses the box clasp, except on one side. Both the box and hinged portions of the clasp are provided with teeth *a a*, which, when brought together, pass through the material of which the broom is made and hold it firmly to or in the clasp. The hinged portion of the clasp is provided with hasps *b b*, which take over projecting staples in the side of the clasp, to hold it in place. To the end of the handle F, within the clasp, is secured one end of a cord, thong, or wire *c*, the other end thereof being secured to a pin or bolt *d*, on the outside of the hinged portion B of the clasp.

The inventor says: I claim so uniting the hinged portion of the case to the handle by means of a thong, cord, or wire, as that the leverage of the handle may be used for closing said hinged portion, thus firmly closing the case on the material to hold it rigidly in the case, as set forth, and to strengthen the middle portions of the clasp, as described.

No. 18,770.—SPENCER ROWE, of Baltimore, Md.—*Improvement in Machines for Making Brooms.*—Patent dated December 1, 1857.—This improvement consists in giving motion to a hollow shaft B, in which the broom handle is secured, directly by the foot of the operator, and in such a way that the same amount or degree of movement is obtained by the pull or retraction of the foot as that obtained by the push thereof, thus giving double the motion of any other broom machine.

Claim.—The employment of the double pawl, operating on the ratchet wheels *c c*, and hollow shaft B, the rock shaft D, and rods *f f*, all arranged as described, when in combination with the guide E and friction spools G and bobbin F, for the purpose of manufacturing corn brooms in a superior manner.

No. 17,631.—THOMAS MITCHELL, of Lansingburgh, N. Y.—*Improved Machine for Finishing Brush Handles.*—Patent dated June 23, 1857.—The brush is first placed upon the platform *d*, and secured to it by pressing down lever L, and the revolving knives E^1 and E^2 form the moulding or edges of the sides of the brush. The crown saw O then serves to finish the end of the stock. The cutter wheel K is used

for trimming the edges of curved brushes, which are applied in the manner illustrated in the engraving, and the cutter wheel M is used to finish the side of rectangularly shaped brushes.

Claim.—The arrangement and combination of mechanical devices set forth and described in the above specification, constituting a machine to be used for the purposes and in the manner set forth, viz: platform D, with revolving cutters shaped and operating as described, crown saw O, with the arms *d d*, and the adjustable platform and cutter wheels K and M, with their cutters, substantially as set forth in the specifications and drawings.

No. 18,528.—LEEMON A. TRIPP, of New York, N. Y., assignor to LEWIS C. PLATT, of Westchester county, N. Y.—*Machine for making Brushes.*—Patent dated October 27, 1857.—The nature of this invention consists in constructing a machine for wiring and sticking the tufts of hair or bristles into clothes, scrubbing, and other brushes, having wood or metal tuft holder stocks or backs, by means of a wire carrying needle K, operated by a crank or cam F, and having an intermit of motion at each end of the stroke of the needle for allowing time for inserting the tuft of hair in the loop of the wire and the feed motion of the brush. Second, a wire holder, griper, or pincers T and griping bar, having a reciprocating motion at right angles to the vertical motion of the needle for the purpose of carrying the wire to the needle, and for taking up the slack of the wire to draw the tuft of hair in the brush stock. Third, a loop former W, operated by a cam on the needle bar crank shaft E, for opening the wire at the point of the needle to allow the tuft of hair to be inserted thereon. And lastly, by the combination of a carriage Z, for carrying the brush stock with the needle, so that the needle will enter each hole in the stock, in succession, at the required time.

Claim.—The inventor says: I claim, first, the use of the slot H, or equivalent therefor, in the connecting rod G, in combination with the needle for causing it to remain stationary at each end of the stroke of the crank a definite space of time, for the purpose before set forth.

Second. I also claim the use of the sliding bar R, having a bracket S attached thereto, in combination with gripers T, operated by the devices before described, or equivalents therefor, for the purposes substantially as set forth.

Third. I also claim the loop former W, operated by means substantially as described, in combination with the needle, for the purposes before set forth.

No. 16,950.—JAMES T. STEER, of New York, N. Y.—*Improvement in the Manufacture of Paint Brushes.*—Patent dated March 31, 1857.—The process of manufacturing these brushes is as follows: The bristles are passed within the binding ferrule C, the edge of the ferrule C is then placed against the edge of the ferrule E, and the bristles are driven into the ferrule E until they come in contact with the cap. The conical handle F is then entered at the brush end of the bristles with the small end, and driven up until it fits tightly in the shank D.

Claim.—The use of the binding ferrule C, for the purpose of effect-

ing, as described, the introduction of the bristles into the cap ferrule E, the said cap ferrule being made in one piece, with its cap and shank, as described, for the purpose of making an improved paint brush, as set forth.

No. 18,647.—GEORGE R. PECKHAM, of Worcester, Mass.—*Improved Cake Cutter.*—Patent dated November 17, 1857.—Fig. 1 represents a perspective view, A the handle affixed to the outside cutter B, C the cross piece attached to the upper rim of the outside cutter, F the centre or smaller cutter placed within the socket E, D the head within or at the end of the cylinder F.

Fig. 2 represents the cutter F taken from its socket, as shown in fig. 1.

Fig. 3 is a transverse sectional view, with cutter F and head D reversed in its position, as shown in fig. 1, the cutter being down and the head upwards; H is a rim turned in on the cross piece C, for the purpose of keeping down the cutters F with the outside cutter B.

Claim.—The movable cutter F, with its head D, being placed in the socket E, as represented, and its capability of being reversed in its position, as represented, for the purposes and uses specified.

No. 16,684.—RHODA DAVIS, of Brookhaven, N. Y.—*Improved Elastic Cap for Sealing Cans and Bottles.*—Patent dated February 24, 1857.

Claim.—The inventor says: I do not claim to be the inventor of flexible caps for covering the mouths of jars, neither do I claim their exclusive use. Closing the mouths of vessels by means of caps has been practiced from time immemorial; but, in general, the caps employed are inconvenient, because they require to be tied on or sealed with wax in order to render them tight.

But a self-acting cap made of India rubber, in the forms described, and possessing the virtue of yielding when drawn over the mouth of the jar, and then contracting so as to fasten itself securely around the lips of the vessel, rendering the mouth thereof perfectly air-tight, is, to the best of my knowledge and belief, a new article of manufacture.

Therefore I claim, as a new article of manufacture, a cap or cover A *b* for sealing vessels, composed of India rubber, when made in the form and possessing the virtues substantially as described.

No. 18,035.—WILLIAM BORRMAN, of Cincinnati, Ohio.—*Improved method of Hermetically Sealing Cans.*—Patent dated August 25, 1857.—The nature of this invention will be understood by reference to the claim and engravings.

Claim.—The mode, substantially as set forth, of hermetically sealing cans by means of the central screw stem *c* and sheath *e*, in the described combination, with the pliable lid *f g h j*, nut *d*, and gaskets *i* and *k*.

No. 18,078.—EDWIN BENNETT, of Baltimore, Md.—*Improvement in Sealing Cans.*—Patent dated September 1, 1857.—The jar being filled, the combined cap and stopper is placed over the mouth of the

same, after which the jar is turned neck downward and melted beeswax is poured into the space formed by lip *b*, and the entire spaces *b* and *c*, figure 2, must be filled with the melted substance.

The inventor says: I am fully aware that caps and stoppers and other sealing devices have been employed in application to jars and vessels containing fruit or other substances, and consequently I do not claim any of said devices as known or used.

I am also aware that plastic and adhesive substances have been used and combined with caps and stoppers for various purposes, but I disclaim such materials and combinations.

I *claim* the construction of a cap formed with a flaring lip-like rim *b b b b*, and groove or gutter C C, and combined with a stopper part *d d e e*, arranged and applied to an inverted jar, or other receptacle, in the manner and for the purposes substantially as set forth.

No. 17,783.—MILLS B. ESPY, of Philadelphia, Pa.—*Improved Device for Sealing Bottles, Cans, &c.*—Patent dated July 14, 1857.—The nature of this invention will be understood by reference to the claim and engravings.

Claim.—The combination of the upper plate B, having the slot *g* and the two hooked projections *f f*, the lower plate *c* having the screw hole *h* and the two hooked projections *f f*, with the thumb screw D and the jam nut E, the same being adapted and arranged together so as to be applicable to the mouth of a bottle or jar, substantially in the manner and for the purpose set forth and described.

No. 18,631.—STEPHEN CULVER, of Newark, N. Y.—*Improved Carpet Fastener.*—Patent dated November 17, 1857.—The claim and engraving explain the nature of this invention.

Claim.—The method of securing carpets to floors by means and use of a metallic plate attached to the under side of the carpet, perforated to receive the head of a screw, and by such perforation hitched to a screw, or its equivalent, driven into the floor, in the manner and for the purposes set forth, so that the carpets may be put down and taken up at pleasure, without the use of tools.

No. 17,488.—DAVID N. B. COFFIN, Jr., of Newton, Massachusetts.—*Improvement in Carpet Fastenings.*—Patent dated June 9, 1857.—The nature of this invention will be understood by reference to the claim and engravings.

Claim.—A screw having a head arranged at one side of its axis, so that it may be applied and operated as set forth, or so that the screws may require a turn of only a part of a revolution to secure or to release the carpet after being screwed into their places, and whereby it is made practicable to take up a carpet and replace it in a very short space of time, and with great ease. In other words, I claim the eccentric headed screws for securing carpets to floors and for similar purposes.

No. 17,890.—WASHINGTON H. PENROSE, of Philadelphia, Pennsylvania.—*Improvement in Fastenings for Carpets.*—Patent dated July

28, 1857.—The nature of this invention will be understood by reference to the claim and engravings.

Claim.—The use of bars, strips, or rods A with teeth or points G, either straight, inclined or hooking, fastened to the floor on which to place the carpet, in combination with strips, bars or rods D fastened to the washboard E to press the carpet down upon the teeth or points, for the purpose of retaining carpets upon a floor, in the manner substantially as described.

No. 17,897.—RICHARD E. SCHROEDER, of Rochester, New York.—*Improvement in Fastenings for Carpets.*—Patent dated July 28, 1857.—The nature of this invention will be understood by reference to the claim and engravings.

Claim.—The plate C secured to a stock B, or directly to the flooring by a joint, the plate having a spring D bearing against it, substantially as described for the purpose set forth.

No. 18,466.—ELLIS NORDYKE and ADDISON H. NORDYKE, of Richmond, Indiana.—*Automatic Caster and Fan.* Patent dated October 20, 1857.—This invention operates as follows: The machine being wound up is placed upon the table. The centre D and arms F are adjusted as shown in the drawing. The works are now permitted to revolve, the fan arms revolving with considerable velocity, so as to keep off the flies. The caster frame B, also revolves, alternately displaying its various contents.

The inventors say: We are aware that revolving fans operated by clock-work are now in use; such device therefore of itself we do not claim.

But we *claim* the combination of a revolving fan C D F F F F, with the caster A B, in the manner shown and described.

We also claim operating the caster frame B in the manner set forth.

No. 18,740.—EDWARD GLEASON, of Dorchester, Massachusetts.—*Improvement in Revolving Bottle Casters.*—Patent dated December 1, 1857.—This invention is an improvement on a former invention by the same inventor, patented October 21, 1856. The claim and engravings show the nature of the improvement.

Claim.—The inventor says: I do not claim separately and broadly the revolving doors E, nor the revolving body B.

But I claim the combination of the pinions *h h h*, each moving a caster door and cruet, and the wheel F with the pinion e^1 of the rod or arbor *f*, the said pinion e^1 gearing into a segment rack d^1 in the wheel F, as set forth, so that when this combination is actuated through the knob *i*, the caster, cruets, and doors to which they are attached may be rotated independently of the rotation of the body B of the caster.

No. 18,839.—TIMOTHY P. BURGER, of Oyster Bay, N. Y.—*Improvement in Casters for Furniture.*—Patent dated December 15, 1857.—The claim and engravings explain the nature of this invention.

Claim.—The new manufacture of caster described, to wit: a ball caster, in which the large ball rolls against a small ball arranged above it, and against friction rollers arranged below the horizontal centre of the large ball, so as to retain it (the large ball) in its place when the caster is lifted from the floor.

No. 18,377.—MOSES S. BEACH, of Brooklyn, N. Y.—*Folding Chair for Pews.*—Patent dated October 13, 1857.—In each of the drawings A represents the pew seat, B the end piece of the pew, C the seat of the movable chair, D the chair back, E the chair legs, F the back and leg brace, fastened to the chair back, G a hanging stay-piece, fastened to the end piece of the pew, and serving as legs to the chair when open and a support when closed.

The inventor says: I do not claim broadly to be the first inventor of folding chairs, the backs and legs of which are hinged, for they are well known.

But I *claim* the employment of the brace F, when arranged as described, so as to serve the treble purpose of a brace or stop for the lock D and the leg E, and also as a stop to prevent the back D from opening laterally when the chair is folded against the pew.

No: 18,873.—JOHN SAWIN, D. J. GOODSPEED, and JOHN H. MINNOTT, of Gardiner, Mass.—*Improved Infantine Exercising Chair.*—Patent dated December 15, 1857.—The claim and engravings describe the nature of this invention.

The inventors say: We do not confine our invention to arranging the spring so that it shall envelop the shaft, as it may be applied on one side of the shaft, in which case two or more springs might be necessary.

Neither do we claim the application of a spring to a seat, as such is not new.

Nor do we claim a rotary chair or stool, provided with a foot rest, to be so attached as to rotate with the seat, such seat being provided with any spring on which it may rest and play, as stated.

We *claim* our improved child's exercising chair, as constructed, with the continuous or endless foot rest, and with its seat supported by a spring or springs, and so as to be capable of being freely rotated and to operate in other respects as specified.

No. 17,008.—RANSOM WITHERELL, of Huntington, Mass.—*Improved Invalid Chair.*—Patent dated April 7, 1857.—When the bars D are in the position represented in dotted lines, the occupant will sit in a natural and easy position on seat C, the bars E and cross-piece F forming the back of the chair, and the bars G the foot rests. The occupant by releasing the round b^1 from catch H, by means of his foot, will liberate the bars D and allow them to turn in to the position represented in full lines.

The inventor says: I do not claim a chair provided with a swinging back and foot rest irrespective of the mode of construction and arrangement shown.

I *claim* attaching the bars E E to one end of the bars D D by a

joint, and attaching the bars G G in a similar manner to the opposite ends of the bars D D, the bars E E, with their cross piece, forming the back of the chair, and the bars G G, with their rounds, the foot rest; the bars D D being pivoted to the opposite sides of the stationary chair seat C and perfectly balanced on their pivots; the whole being arranged as shown for the purpose specified.

No. 18,696.—DAVID KAHNWEILER, of Wilmington, N. C.—*Improvement in Ventilating Rocking-Chair.*—Patent dated November 24, 1857.—The operation of this invention is as follows: Suppose the upper chamber of fig. 2 to be filled with pieces of ice, the atmosphere entering at K, by means of rocking, becomes cooled by continued contact with the water, particularly as it passes over in its serpentine course to its escape at *f*, and thence comes immediately in contact with the ice, absorbing its latent cold, forced out at *g*, through the tube *n*, fig. 1, agreeably impregnated with perfume in passing at *o*. Tube *g g*, fig. 1, can be connected directly with *o*, without passing through the ice, or directly with tube *p*.

The inventor says: I do not claim purifying or cooling air by passing it in contact with ice, or any mode of impregnating air with perfumes.

Nor do I claim producing a current of air by the rocking of a chair for the purpose of fanning the person.

But I *claim* combining a refrigerating apparatus with a rocking-chair in the manner set forth.

No. 16,635.—SAMUEL J. ANDERSON and NELSON RICHARDSON, of Erieville, N. Y.—*Improvement in Extension Chairs.*—Patent dated February 17, 1857.—The levers *d* upon legs *e* may be drawn out from underneath the box, (as represented in broken lines in the engravings,) and the boards or seats B be placed on top. If a still greater length of seat is required, the part *b* of the box is turned around in line with part *a*, (as represented in broken lines in fig. 2.)

The inventors say: We do not claim the levers *d*, for they have been previously used for similar or analogous purposes.

But we *claim* the levers *d* and folding seats B attached to the box A, as shown, the box being formed of two parts *a b*, connected by a hinge *c*, and the whole arranged as described for the purposes set forth.

No. 17,567.—JAMES G. HOLMES, of Charleston, S. C.—*Improvement in Chairs for Invalids.*—Patent dated June 16, 1857.—The back B is secured to the end of the swinging frames *a*, the seat C is secured to their lower bar, and the supports G to the front bar of said frames. The frames *a* can be made to swing on their pivot *b*, and when the back B is inclined to the rear the seat frame C is moved forward and the supports G are thrown into a position nearly parallel to the back B.

Claim.—The arranging of the joint by which the seat and back are attached and move, so that it shall correspond with the hip joint of

the human frame, that is, placing it above the seat and in advance of the back, substantially in the manner and for the purpose set forth.

Also, arranging the knee joint in the chair or seat to correspond with that of the human knee joint of the person occupying it, substantially as described.

Also, the frame work of metal or other material by which all the joints and pivots, excepting that of the separate apron which moves with and supports the leg from the knee down, are combined either with or without the arm rest, as may be desired, as set forth.

No. 18,722.—JORDAN L. MOTT, of Mott Haven, New York, and WILLIAM TABELE, of New York, N. Y., assignor to The J. L. MOTT IRON WORKS, of Mott Haven, New York.—*Improvement in Rotary Chairs.*—Patent dated November 24, 1857.—In the engravings *a* represents the chair pedestal, made of cast-iron, with the upper part *b* hollow and flanched to receive the socket *c*, also made of cast-iron. This socket is formed with a surrounding rim *d*, to the inner periphery of which is fitted a securing ring *e*. The central portion of the bottom of the socket is cup-formed, as at *f*, to receive and hold oil, and the central part thereof is formed into a step to receive the pivot *g* of central nut *h*. The upper surface of the nut forms a base for the under surface of the bottom plate *i* of the seat, which is secured thereto by a nut *j*, tapped on to a stem projecting upwards from the upper part of the nut. The bottom plate *i* is cast in one piece with the back *k*, and after this plate is secured to the nut a wooden slat *l* is secured thereto by screws; but before the nut is secured to the plate *i* the securing ring *e* is put over the nut.

Claim.—The inventors say: We do not claim the special form of the parts, as these can be variously modified and still retain the mode of operation which we have invented.

Nor do we wish to be understood as limiting ourselves to the use of our said invention in a rotating chair of the construction specified, as it will be obvious that it is equally applicable to all rotary chairs.

We do not claim as our invention any of the separate parts above described, such as the pivot attached to the chair seat, and fitted to turn in the socket in the upper part of the pedestal.

But we *claim* the combination of the securing ring, substantially as described, with the flanch projecting from the spindle of the pivot, which is fitted to turn in the socket on the upper end of the pedestal, as and for the purpose specified.

No. 16,972.—JOHN T. FOSTER and JACOB J. BANTA, of Jersey City, New Jersey, and JAMES H. BANTA, of Piermont, New York.—*Improvement in Forming Spiral Springs for Chairs, Sofas, and other articles.*—Patent dated April 7, 1857.—This spiral spring is formed by cutting a plate *a*, by a suitable tool, in a scroll or spiral form, commencing at or near the centre of said plate until the cut approaches to the desired proximity to the edge of said plate. Two springs *b* formed in this manner are riveted together at their apex, thus forming an efficient double spiral spring.

Claim.—The spirally cut metallic plate spring applied to sofas,

chairs, and similar articles, substantially as and for the purposes specified.

No. 18,632.—LEWIS H. CUSHMAN, of Monmouth, Maine.—*Improved Clothes Clamp.*—Patent dated November 17, 1857.—In the engravings *a a* are the cheeks or body of the clamp; *b* is the spring, consisting of a metallic wire or rod bent, as shown in the engraving; *c* is the lever, held in its place by the staple *d*. This lever has a cam-shaped end next to the clamp, and the staple passes through the first cheek and is firmly fixed in the second.

Claim.—The combination of the spring and cam lever, as set forth.

No. 16,923.—JOHN HUMPHREY, of Keene, N. H.—*Improved Machine for Cutting Slots in Clothes Pins.*—Patent dated March 31, 1857.—The pins are fed to this machine by means of the slide A, and drop into the groove G of the holder B. The machine being set in motion, the holder is vibrated longitudinally on its ways F, by the arrangement of crank D and pitman E. The pin drops from the slide A on to the stationary rod I, and bearing against projection *b*, said pin is moved from position *r* to position *s*, figure 2, as the holder is driven towards the saw. It is there griped by dog H, and has its slot cut in by saw C, and, as the next movement of the holder B brings on another pin, the cut pin is discharged, the rod I pushing the pins forward as they lie in the groove G.

The inventor says: I do not claim the saw, the inclined spout, or the means of securing the pins for the action of the saw, separate from the holder; neither do I claim a sliding holder, irrespective of its construction.

But I *claim*, first, a holder so constructed that the pins may be received into a groove or chamber behind the part in which they are secured, for the action of the saw, and then driven forward by a driving rod, or its equivalent, to the proper position for the cutting of the slots, the same being stationary, or having a reciprocating motion, as described.

Second. I claim, in combination with the holder, the saw, the inclined spout, and the dog H, or their equivalents, for the purposes set forth.

No. 17,240.—SARDIS THOMSON, of West Otis, Mass.—*Improved Clothes Pounder.*—Patent dated May 5, 1857.—A downward pressure, acting upon the handle E, against the spring D, causes the piston B to descend in the cylinder A, the same being returned by the recoil of the spring on the removal of the force from the handle, the descent forcing the water through the clothes by the pressure of air, and its return raising the clothes, by suction, from the bottom of the tub, both of which operations are calculated to agitate the liquid and effect the cleansing of the clothes.

Claim.—The bell shaped cylinder, in combination with the piston, piston rod, spring, and handle, or other equivalents, to produce the same effect, viz: the cleansing or washing clothes by agitating the

liquid by the pressure of air, substantially the same as described, and to be applied to the purposes set forth.

No. 18,930.—S. I. RUSSELL, of Chicago, Ill.—*Improvement in Clothes Racks.*—Patent dated December 22, 1857.—The claim and engravings explain the nature of this invention.

The inventor says: I am aware that adjustable rotating arms forming a clothes' dryer are not new, and I do not broadly claim them. An example is seen in S. Woodward's patent, 1854, and in J. Higgin's rejected application, 1855; nor do I claim the hollow post or any portion of either of the above mentioned devices; nor do I claim indiscriminately the counterpoising of all descriptions of objects.

But I *claim* the arrangement within the hollow base B of a counterpoising weight *d*, connected by a cord with the rising and falling rod D, for the purpose of balancing or nearly balancing the hub E and arms *k*, and thus preventing the sudden fall and breakage of the parts, as well as rendering them easy of operation.

I also claim as new in clothes' dryers the employment of a spring *h* attached to the base B, and acting against the shaft A, all in the manner and for the purposes set forth, and not otherwise.

No. 18,777.—RILEY SMITH, of Towanda, Pa.—*Improved Clothes Wringer.*—Patent dated December 1, 1857.—The claim and engravings explain the nature of this invention.

The inventor says: I am fully aware clothes have been wrung in a cloth, bag, or net, by applying the power that twists said cloth, bag, or net, at one or both of their ends. This I do not claim.

But I *claim*, in combination with the cloth, bag, or net that contains the clothes that are to be wrung, a twisting or wringing device, composed of a cord *i* and the lever Z, when said cord is united to or winds around the clothes receiver, and the lever can slide thereon, so as to apply the greatest pressure nearer the centre of the clothes receptacle, and moved where most desired or required, and as set forth.

No. 18,710.—ELIAS SCHNEIDER and A. KOLMAN, of New Tripoli, Pa.—*Improvement in Coffee Roasters.*—Patent dated November 24, 1857.—A is a vessel containing the coffee having the form of a right cylinder; B is a perpendicular shaft stepped at *a* in the bottom of the vessel. Fastened to the shaft are the horizontal cross pieces b b^1, connected together by a series of ribs *c*. Attached to piece *b* are the scrapers *d d*, situated on opposite sides of said piece; e e^1 are horizontal arms attached to the piece b^1 which are bent, forming the pendants *f f*. There are two sets of arms e e^1, and are fastened on opposite sides of piece b^1.

Claim.—The combination of the agitator, as described, with the vertical cylinder containing it, as and for the purposes specified.

No. 18,263.—W. F. MESSENGER and HENRY REHAHN, of New York, N. Y.—*Improved Cooler.*—Patent dated September 22, 1857.—Through the center of the bottom of chamber A an opening *a* is made, to allow the plug a^1 of the cask to project through; and at the bottom ends of

the chamber A, at each side, a grating *b* is placed, and a plug *c* is fitted in each bottom end of the chamber.

In using this invention, which is adapted for casks, the chamber A is filled with ice *e*, and chamber C is filled with plaster of Paris *f*, or other non-conducting material. The waste water is allowed to escape from the chamber by drawing the plugs *c*.

The inventors say: We claim the refrigerating saddle A, substantially as set forth.

No. 17,697.—DAVID ROWE, of Baltimore county, Md.—*Improvement in Modes of Preserving Green Corn.*—Patent dated June 30, 1857.—The heart of the cob is extracted by means of a suitable knife, and the inside of the cob is sprinkled with salt or sugar; the cob is then exposed to a warm, dry temperature, when it will dry uniformly, outside and inside.

Claim.—The art and process of preserving green corn in the ear, by extracting the pith or heart from the cob, and seasoning and drying the inside of the cob as rapidly as the outside, for preserving the virtues and juice of the grain, and preventing the collection of mould or corruption, as described, and for the purposes set forth.

No. 17,048.—DANIEL W. MESSER, of Boston, Mass.—*Improvement in Molasses Cups.*—Patent dated April 14, 1857.—By inclining the vessel A the molasses will run out through spout B and over pulley C; having poured, the vessel is returned to a horizontal position, and by turning head F pulley C will be turned, scraping off the adhering molasses which runs back into the cup A.

The inventor says: I do not claim any vessel to contain viscid fluids.

Neither do I claim a cover or diaphragm as described; nor do I claim any method of fastening the spout or channel way to the vessel as by a screw or solder, as all mentioned above was known before.

But I *claim* the adaptation of a movable surface or lip (to vessels intended to contain molasses or fluids of the same viscidity,) said surface so situated in relation or position with the spout or channel way and forming part of the same, that by moving the said surface in the manner set forth and described in my specifications and drawings, the viscid fluid or molasses which remains on the movable surface or lip, after pouring from the said vessel, is by the practice of my invention returned to a position where, by the force of gravity, it returns to the vessel, but in the ordinary vessels drip from the mouth or lip.

No. 16,673.—LEWIS B. GUSMAN, assignor to Himself and HENRY W. and HENRY STAFFORD, of Philadelphia, Pa.—*Improvement in Curtain Fixtures.*—The nature of this improvement will be understood from the engraving.

The inventor says: I do not claim the general application of a lever nip as a substitute for teeth, to prevent slipping.

But I *claim* the use of a lever A, constructed substantially as described, when the said lever is caused to operate upon the bracket B, in supporting a window curtain, by means of the upward strain of the

cord D, the whole being arranged and operating together in the manner and for the purpose set forth.

No. 17,059.—C. H. WHEELER, of Boston, Mass.—*Improvement in Curtain Fixtures.*—Patent dated April 14, 1857.—The upper edge of the curtain *g* is lapped over the rod *f*, which is entered from the end of the roller *a* into the dovetailed groove *c*, the curtain passing through the narrow slit *i*, while the rod *f* is jammed between the inclined sides of groove *c*.

The inventor says: I do not claim broadly fastening the curtain to the rod by securing it to a wire that is introduced into a groove into the roll, having a narrow slit for the passage of the curtain; but this I only claim when the sides of the groove are straight and dovetailed, as described, whereby the curtain is securely held to its roll, without other fastenings, as set forth.

No. 17,967.—NATHANIEL S. GRAVES, of Boston, Mass.—*Improvement in Curtain Fixtures.*—Patent dated August 11, 1857.—The nature of this invention will be understood by reference to the claim and engravings.

The inventor says: I do not claim broadly fastening the curtain to the roller, by securing it to a wire or rod that is introduced into a groove in the roller, having a narrow slit for the passage of the curtain, but this I only claim when the sides of the grooves are dovetailed, as described, whereby the curtain is securely held to its roller without other fastenings, as set forth.

No. 18,536.—JOHN W. CURRIER and JAMES M. THOMPSON, of Holyoke, Mass.—*Improvement in Curtain Fixtures.*—Patent dated November 3, 1857.—In the helical groove *c* a slider, F, extends; it also being extended into a straight and horizontal groove G, formed longitudinally in the inner surface of the bore of the curtain roller. Two cords H, I, are attached to the slider, and run in opposite directions therefrom, and through the helical grooved rod D, which is made tubular, the cords passing out of the opposite ends of said rod, and depending therefrom, as shown in the engravings.

The inventors say: We *claim* the combination of mechanism for rotating the curtain roller, for the purpose of either winding up or unwinding the curtain, the same consisting of the slider, F, the cords, H I, and the straight and helical grooves for the slider to work in, one of said grooves being stationary, and the whole being arranged and made to operate as described.

No. 18,878.—LEWIS WHITEHEAD, of Buffalo, N. Y.—*Improvement in Curtain Fixtures.*—Patent dated December 15, 1857.—By this invention the curtain is lowered from the top and raised from the bottom. In the engravings A represents the rail; B, the sliding block; C, the sliding wedge-bolt; D, the brace; E, the movable bearing; F, the spiral spring; G, the mortise for the ends of the movable bearing; H, the thumb-screw, or set; I, the extension bar for brace with bearing attached; K K, the blocks for rail; L, the thumb knob; M, the projecting shoulder; N, the curtain roller, and O, the handle.

The inventor says: I *claim* first, the rail A, in combination with the sliding block B, and the brace D, for the purposes set forth.

Second, I claim the friction roller N, in combination with its movable bearing E, the rail A, and the projecting shoulder M, for operating the curtain as set forth.

Third, I claim the sliding wedge-bolt C, in combination with the moveable bearing E, or the eccentric as an equivalent for the purposes set forth.

Fourth, I claim the extension bar I, with the roller bearing and set, for the purposes set forth.

No. 16,960.—RANSOM BALLOU, jr., and BENJAMIN F. HOOPER, of Albany, New York.—*Improvement in Window Curtain Fixtures.*—Patent dated April 7, 1857.—The nature of this invention will be understood by reference to the claim and engraving.

Claim.—A tightening button or pulley B affixed at or near the circumference of a rotating disk or barrel T, the said disk being combined either with the pawl F and fixed ratchet, as described, or with other means within it for maintaining the necessary stress upon the cord A, substantially as set forth.

No. 16,989.—PURCHES MILES, of Hartford, Connecticut.—*Improvement in Window Curtain Fixtures.*—Patent dated April 7, 1857.—The curtain is attached to roller C, one end of which is supported by a bracket *a* to which two springs D are secured which bear upon circular projections within the flanges B for the purposes as specified in the claim. The curtain is operated by means of an endless band A which has a series of eyelets secured in it which take hold of pins *e*.

Claim.—The arrangement of the springs D for the three-fold purpose of keeping the band in place, supporting the shade at any required height, and preventing the roller from having end play, in the manner substantially as set forth.

No. 16,741.—PURCHES MILES, of Hartford, Connecticut.—*Improvement in Curtain Rollers.*—Patent dated March 3, 1857.—E represents the curtain.

The inventor says: I do not claim as new the toothed flanged pulley, nor the endless eyelet band, nor the friction spring, nor the roller curtain by themselves, nor any two or three of these in combination.

But I *claim* the combination of the toothed flanged pulley A, the endless eyelet band B, and the friction spring C, with the roller curtain, in the manner and for the purpose substantially as set forth and described.

No. 17,368.—CHANDLER FISHER, of Milton, Massachusetts.—*Improvement in Curtain Rollers.*—Patent dated May 26, 1857.—The nature of this invention will be understood by reference to the claim and engraving.

Claim.—The employment of a spring in connexion with the pivot of a curtain roll, operating in the manner substantially as set forth, for the purpose of producing friction between the roll and the

window frame, and thereby holding the curtain in any position in which it may be placed.

No. 18,323.—DAVID N. B. COFFIN, jr., of Newton, (Centre,) Massachusetts.—*Improvement in Curtain Rollers.*—Patent dated October 6, 1857.—This improvement relates to the construction of the roller so as to secure a degree of elasticity by which the sides of the groove are made to act as a spring clamp or spring rise, to hold the curtain with its strips, thus obviating the inconvenience arising from the strips, frequently varying in thickness so much as to make it difficult to force some of them into the groove as ordinarily constructed, while others go in easily; and so that the caps may also be made to compress the sides of the grooves upon the curtain and its strip, thereby clamping the curtain doubly secure, and whereby is avoided the necessity of fitting caps over the ends of the strip, as heretofore found necessary to hold the strip in the groove. The drawings showing different shaped grooves, and the claim describe this improvement.

The inventor says: I *claim* the grooved roll made elastic substantially as described, and so clamping the curtain and its strip with or without the caps.

No. 17,006.—C. H. WHEELER, of Boston, Mass.—*Improvement in Fixtures for Curtain Rollers.*—Patent dated April 7, 1857.—To secure the curtain to its rod, the rings *f* and *g* are removed from off its ends, the two parts of the rod are then separated, the curtain is placed between them, and the rings are returned; the block L on pivot *m*, is then caused to enter between the ears *h* of bracket E, where it is held firmly in place.

Claim.—Perforating the block in which the curtain rod revolves so that it may be slipped back upon the pivot, and securing it to the bracket by the dovetailed ears, in the manner and for the purpose substantially set forth.

No. 17,911.—LEWIS WHITE, of Hartford, Conn., assignor to Himself and ELIHU P. WHITE, of same place.—*Improvement in Fixtures for Curtain Rollers.*—Patent dated July 28, 1857.—When the curtain is stationary the friction roller B slides down the incline plane C, and presses on the periphery of the roller pulley A, and thus locks said roller. To draw up the curtain the line is pulled downward vertically, which causes the friction roller B to slightly move up the incline C and offer no resistance to the revolving of the curtain roller.

The inventor says: I do not claim the lever or pulley or any other of the arrangements as new. But I *claim* the application of the friction roller B, for the purpose as set forth, substantially as described.

No. 18,180.—HIRAM BERDAN, of New York, N. Y.—*Improvement in Machines for Kneading Dough.*—Patent dated September 15, 1857.—The stationary trough A being partly filled with flour and water to requisite quantity to convert it into dough, shaft H and wheel I are rotated, and the rotary motion of the carrier D, and the revolution of bar F, and scraper G, mix the water and flour well together, the flop-

per E descends into the mass, as represented at Z, and as soon as it touches the bottom of the trough it comes to lean against pin *d*, and as it is moved on it carries the dough upwards until the wiper *e* comes in contact with pin F, whereby the flopper E is turned to the position *y*, discharging the dough to the bottom of the trough to be further operated upon.

Claim.—The employment in a kneading machine of a flopper E, applied and operated in any manner, substantially as set forth.

No. 18,723.—JOHN HECKER and WILLIAM HOTINE, of New York, N. Y., assignors to JOHN HECKER, of New York.—*Machine for Feeding the Flour, Mixing the Materials, and Kneading Dough.*—Patent dated November 24, 1857.—The object of this invention is to effect the thorough admixture of the flour and water, or other fluid, and the sponge, if applied, to the making of dough for fermented bread by acting on small quantities at a time, but by a continuous operation, so that all parts of the operation shall be going on at the same time.

The inventors say: We *claim* the employment of the rotating disk with its slot and cutter or scraper, one or more, as described, in combination with, and forming the movable bottom of, a vessel containing a supply of flour, to deliver the flour in regular given quantities, as set forth.

We also claim, in combination with the rotating disk or bottom, substantially as described, the making of the feeder or vessel, containing the supply of flour, conical, and with the lower end largest, as described, to prevent the packing of the flour, as described.

We also claim, in combination with the feeder, or its equivalent, and the mixing trough, the inclined revolving plate for scattering and distributing the flour at or near the periphery of the mixing trough, as and for the purpose specified.

We also claim, in combination with the mixing trough and the flour distributor, the revolving channel-way along the under side of the distributor for distributing the water or other fluid, and the water at or near the periphery of the mixing trough, as described, to insure the proper admixture of the ingredients, as set forth.

We also claim, in combination with the flour and water feeders, or their equivalents, the apparatus, or any equivalent therefor, for feeding and supplying the sponge, or other leaven, at or near the periphery of the mixing trough, as specified.

And finally, we claim the revolving blades and stationary pins or blades, substantially as described, in combination with a mixing trough, having a discharge aperture at or near the centre, and the means described, or their equivalents, for feeding the flour and mixing fluid at or near the periphery of the trough, as described, for mixing the ingredients as they are received, and gradually working and kneading them, and forcing them towards the centre where the dough is delivered, as described.

No. 18,758.—JOHN MCCOLLUM, of New York, N. Y.—*Improvement in Machines for Rolling Dough.*—Patent dated December 1, 1857.—This invention consists in surrounding the feed board I with an end-

less band F, which travels on a pulley G at each end of the same. The carrying surface of the band is supported by the smooth surface of the feed board over which it slides; the pulleys on which the band travels must run with as little friction as possible, so that the feeding apparatus thus constructed being placed at a proper inclination towards the opening between the rolls, the weight of the mass of dough placed on the carrying surface of the band, causes it to move and feed down the dough to the rolls as it is required without rupturing or straining the thinnest film formed between them.

Claim.—The combination with rollers suitable for rolling dough, or similar substances, of an endless feeding band or platform, moving on pulleys or friction rollers as required, the band not being geared to the rollers in any way, and being free to take its motion from the dough.

No. 18,759.—HARVEY MILLER, of Cincinnati, O.—*Improvement in Egg Beaters.*—Patent dated December 1, 1857.—This invention consists of a cast-iron frame, having a ratchet bar *g* and a revolving beater *c d*, in combination with a jar or can, which, together, form an egg beater.

The inventor says: I do not claim the ratchet bar or revolving shaft and beaters.

But I *claim* the frame A B having a ratchet bar *g*, and revolving beater *c d*, in combination with the jar or can, as described, for the purposes set forth.

No. 18,849.—JOHN B. HEICH, of Cincinnati, O.—*Improvement in Egg Beaters.*—Patent dated December 15, 1857.—A is the vessel; B is the beater formed of net work, as shown; C is the rod on which the beater is fastened, working in a socket at top and bottom, marked G and H, respectively; D is a disk of India rubber, or other elastic material, attached to the top of the rod; E is a bow provided with a slot K, in which the bar I works, and having lips F F sliding over corresponding lips J J on the top of the vessel A.

The beater is operated by the pressure produced upon the elastic disk by the motion backwards and forwards of the grooved bar I.

Claim.—The bar I, elastic disk D, and beater B, in combination with the bow E, having lips F F and vessel A as provided with lips J J, when said parts are constructed and arranged in relation to each other in the manner and for the purpose set forth.

No. 17,517.—LAWRENCE REBSTOCK and NICHOLAS REIMEL, of Philadelphia, Pennsylvania.—*Improvement in Automatic Fans.*—Patent dated June 9, 1857.

When the cords *j* are wound upon the drums *i* the fan G will be rotated by the gearing of the clock movement attached to this apparatus and a blast of air will be produced by the fan. By turning the platform C on the base A the fan G may be placed in any relative position with the person receiving the blast.

The inventor says: I do not claim, broadly, the driving of revolv-

ing fans by clockwork, as such contrivances have long been known and used.

Neither do I claim the revolving of mechanism around a given axis, by placing the mechanism upon movable frames. The rotating domes of observatories, telescope stands, and other species of mechanism, are examples of this kind.

But, to the best of my knowledge and belief, there never has been made a fan driven by clockwork, and arranged as shown, so as to be capable of being readily turned upon an axis without moving the whole apparatus. The current of air is thus readily directed towards any given point in an apartment. My invention, therefore, constitutes a new and useful article of manufacture. No apparatus like it has ever before been known or used. Therefore, I *claim* as a new article of manufacture a ventilating fan, constructed as set forth.

No. 18,493.—Amon Bailey, of East Poultney, Vermont.—*Improved Feather Dressing Machine.*—Patent dated October 27, 1857.

The operation of this machine is as follows: The feathers to be renovated are poured into the box B through the door D, which is then securely closed. Steam, which is supplied from any suitable boiler, is admitted through the journal C into the steam chamber H, thence it passes through radial tubes F into longitudinal tubes G. The valves, at this stage of the operation, are arranged to open inwards, so that the steam passing into the tube J through the opening *b* flows into the dressing box, and is thoroughly mingled with the feathers by the rotary motion of the box B, which is kept up during the process. When the feathers are sufficiently steamed, the valves are closed internally and opened externally. The flow of steam heats tubes F and G, and the box being kept in revolution, the steamed feathers are rapidly and effectually dried, when they may be removed for use.

The inventor says: I do not claim dressing feathers by steam.

I am aware that various methods have before been adopted, with more or less success; but none, so far as I can learn, in which the steam has been distributed and controlled in the manner I employ.

I claim the combination of the steam chamber H with the radial tubes F, horizontal tubes G, and valves E, all constructed and operating substantially as described.

No. 18,422.—Nathan Ames, of Saugus, Massachusetts, assignor to Edmund Brown, of Lynn, Massachusetts, and Nathan Ames, of said Saugus.—*Improvement in Graters.*—Patent dated October 13, 1857.

The nature of this invention consists in using the periphery of a sector of a cylinder A for a grater, in combination with the radial guides D D of the holder E, whereby a curvilinear reciprocal motion is given to the substance to be grated.

The inventor says: I *claim* using, as described, the periphery of the sector of a cylinder for a grater, in combination with the radial guides D D of the holder E, whereby a curvilinear reciprocal motion is given to the substance to be grated, substantially as set forth, and for the objects specified.

No. 17,361.—WM. BENNETT, of New York, N. Y.—*Improvement in Griddles.*—Patent dated May 26, 1857.

The smoke arising from the burning grease rises into the upper part of the chamber formed by the cover, where it is caught by the draught of air which is constantly passing into the opening *e*, and carried over the partition *f* into flue *g*, and downward through openings *b* into the fire or up the chimney.

The inventor says: I am aware that culinary vessels of different kinds have been used with various devices for carrying off the steam and smoke and preventing their escape into the room, and that ventilating and other covers have been used for the same purposes and for other purposes upon gridirons, stew and sauce pans, and other culinary vessels. I do not claim any of these covers or devices, as they are not new.

Nor do I claim any one of the features of my apparatus separately constructed.

But I *claim* the new article of manufacture described, comprising the griddle and its ventilating cover, the former being constructed with a flaring flange *a*, openings *b*, sliding register *c*, and openings *d*, and the latter with an enlarged opening *e* and flue *g*, all arranged and operating substantially as and for the purpose specified.

No. 17,461.—JOHN B. WICKERSHAM, of New York, N. Y.—*Improvement in Hat Stands.*—Patent dated June 2, 1857.

The nature of this invention consists in attaching hooks *l* to a series of horizontal terraces *i*, connected by wrought iron rods F, in such a manner that the hooks *l* can be turned horizontally on the vertical rods, so as to allow the different ranges of coats to hang clear of each other.

The inventor says: I do not claim wrought iron tie rods, connecting plates, and castings of iron; neither do I claim furniture formed in the shape of horizontal terraces connected by vertical columns or supports.

But I *claim* the manner specified of attaching the hooks of hat stands on vertical studs or rods, so that said hooks can be turned around horizontally, substantially as and for the purposes specified.

No. 18,543.—JAMES GOODIN, Jr., of Cincinnati, Ohio.—*Smoothing Iron.*—Patent dated November 3, 1857.

A is the iron, and B B is a gas-pipe bent and formed to suit the shape of the bottom of the iron around its edges and back part, and perforated with openings for the escape of the gas against the sides and end of the iron. The gas is let into the pipe B with a flexible tube, connected to the iron at the joint piece *d p f*. C C is a wire gauze placed around the pipe B in the iron, for distributing the gas evenly over the surface of the iron. *g g* is a perforated plate set at the top of the iron, about one-third of the depth of the iron from its top, for helping in retaining and distributing the heat over the surface of it by retarding the escape of the heat into chimney *i*. *h* is the top of the iron, furnished with a handle *k* and chimney pipe *i*, and is held in its place by a rod passing through the lugs J attached to the

iron and its top. 5 5 and 7 7 7 are air openings for supplying the gas with air for combustion and assisting in distributing it equally over the surface of the iron.

The inventor says: I am aware of gas having been used for heating purposes before, and that wire gauze has been employed for distributing the heat; all of which I disclaim, when taken separately or together.

But I *claim* the arrangement of the perforated diaphragm *g g*, with the air openings 5 5 and 7 7 7, when said diaphragm and air openings are arranged with the gas pipe B and gauze C in the bottom of the iron, as specified, for the purpose of detaining and equally distributing the heat over the surface of the bottom of the iron, as and for the purposes mentioned in the specification.

No. 17,470.—LEON LONDINSKY, of New York, N. Y., assignor to Himself and ADOLPHUS E. BECKER, of the same place.—*Improved detachable Handle for Smoothing Irons.*—Patent dated June 2, 1857.

The handle, when opened, as represented in fig. 2, is placed upon the handle of the iron, and the sections A A are brought together by clasping them within the hand, and are fastened by snap spring D falling into catch *a*. By releasing spring D from the catch *a* the sections are separated and the handle can be removed.

Claim.—A detachable handle or holder, made in sections, of wood, to be placed upon the handle of a smoothing iron for tailors', hatters', and laundry use, constructed and arranged substantially as and for the purposes set forth.

No. 17,105.—GALEN B. MCCLAIN, of Bath, Maine.—*Improvement in Smoothing Irons.*—Patent dated April 21, 1857.

This iron is heated by opening the two doors *d* and *e*, and placing the iron over the flame of a gas jet. The body A soon becomes heated, in consequence of a large area of surface of the ribs *b* being presented to the flame.

Claim.—The described sad iron, constructed in the manner substantially as specified, with its doors or flaps *d e* arranged and operating as described.

No. 18,108.—WILLIAM F. SHAW, of Boston, Massachusetts —*Improvement in Smoothing Irons.*—Patent dated September 1, 1857.

The smoothing iron D being placed upon the stand B, in the position represented in the engraving, the heated gases from wire gauze burner *e* pass through passage *k* into flue *h*, and down flues *i*, and escape through discharge openings *l*.

The inventor says: I do not claim heating a flat-iron by means of a lamp having its wick tube, or the flame of its wick, within the body of the iron.

Nor do I claim heating a flat-iron by charcoal or other fuel burned in a chamber within the body of the iron.

Nor do I claim the application of a wire gauze or perforated chimney to an air and gas burner, so as to surround the flame, as such has heretofore been patented by me.

But I *claim* making the flat-iron with ascending and descending flues, inlet and discharge openings, arranged in the body of the iron, and so as to be used with a burner and stand, in manner substantially as specified.

No. 18,498.—JOHN K. CHASE, of New York, N. Y.—*Improved Metallic Screw Cap for Jars, &c.*—Patent dated October 27, 1857.

This improvement consists in forming a thin elastic screw cap out of a solid piece of sheet metal by spinning up the same out of a single plate, without casting, chasing, or swaging, by which a cap is obtained without joint, seam, or flaw, for covering glass, metal, or earthen cans or jars, the elasticity of the screw serving to fit the unequal threads thereon, and the seamless cap insuring tight joints.

The inventor says: I claim a screw cap for bottles, jars, or cans, &c., formed out of a single solid plate of metal, by spinning the same over a threaded chuck, or former, as specified, and for the purpose set forth.

No. 16,887.—RICHARD A. STRATTON, of Philadelphia, Pa.—*Improvement in Mangles.*—Patent dated March 24, 1857.—A A are the frames of the machine, in which axles *b b* of the rollers B B^1 have their bearings. To these axles and on the outside of the frame are secured the toothed wheels C C^1, into both of which gears the pinion G. The latter is allowed to turn loose on a pin *h* secured to the frame, and is furnished with a handle L, on turning which the rollers are caused to turn in the same direction. The axles *d* of the upper roller D are allowed to move freely in the slot at the upper portion of the frames A, and connected to the axles on each side of the roller D, and inside of the frames, are the rods E, the lower ends of which are jointed to the pins *i* on the bent levers F. The latter have their fulcrums on pins H, secured to the inside of each frame, the other ends being connected together by the cross-bar *f*. The frames are connected together by the stays *j j* and *e*. K is the middle roller, around which the goods to be mangled are wound.

The inventor says: I am aware that rollers have been used for mangling clothes; but heretofore the goods have generally been wound from one roller to another, and pressed between their surfaces after the manner of ordinary calenders. Therefore, I do not claim exclusively the use of rollers for mangling clothes.

But I *claim* the roller B and B^1, in combination with the movable roller D, arranged and driven substantially in the manner set forth, for the purpose of acting upon the roller K in such a manner that the cloth on the same may be efficiently mangled without winding it from one roller to another, and for the purpose of removing and replacing the said roller K with facility.

No. 17,785.—WILLIAM PRINCE FORD, of Cheneyville, La.—*Improvement in Mattresses.*—Patent dated July 14, 1857.—The cleaned moss is spun into a loose rope of uniform thickness, and is then woven as a filling in a warp of twine, as represented in the engraving, where *a* represents the rope, and *b* the warp twine.

The inventor says: I do not claim broadly the use of moss as a material for stuffing bed sacks. I am also aware that floor mats composed of moss twisted into hard ropes and woven have long been known and used; therefore, I do not claim such use or manufacture of moss.

But, to the best of my knowledge and belief, no mattress composed of moss made up as described, and presenting the peculiar qualities set forth, was ever before known or used. My improved mattress is, therefore, a new article of manufacture.

I *claim*, as a new article of manufacture, a mattress when made in the manner described of moss.

No. 18,585.—WILLIAM HERSEE, of Buffalo, N. Y.—*Improvement in Springs for Matresses, Chairs, &c.*—Patent dated November 10, 1857.—The claim and engravings explain the nature of this improvement.

Claim.—Supporting or maintaining the spring A in a proper vertical position upon the slat C, by means of the guide pin B, secured within the spring by means of the head *a* and block *b*, the lower end of the pin being fitted and working in or through the socket D in the slat C, as and for the purpose specified.

No. 18,886.—THOMAS TOLMAN, of West Townsend, Mass., assignor to JOHN P. SABEN, of Fitchburg, Mass.—*Improvement in Ventilating Mattresses.*—Patent dated December 15, 1857.—The inventor says: I form a valve-seat, seen at P, and fasten it firmly between two of the seats B; through this seat are formed three holes, at S, to admit air into the interior of the bed; on the top of the seat P is fitted the valve M, so as to swing up and down by means of the leather N on its under side, and which constitutes the hinge for it to swing on; and to make the valve air-tight, it is screwed to the seat P by the screws O. The upper or raised position of this valve is shone by lines, as when admitting air.

Claim.—The valve M and bed, so constructed and relatively arranged in connexion with each other that the induction and expulsion of air through the bed to ventilate it, results from the movement of the bed caused by its use, essentially in the manner fully set forth.

No. 17,527.—EDWARD P. THOMPSON, of Worcester, Mass.—*Improvement in Mop Head.*—Patent dated June 9, 1857.—The nature of this invention will be understood by reference to the claim and engravings.

The inventor says: I do not claim a mop-holder or clamp, having a movable jaw, operated by or secured in place by a screw or a ring and hook.

But I *claim* the improved self-acting mop-holder, made substantially as described, viz: with a spring *a* and two bent legs or bars $b\ b^1$, $c\ c^1$, applied together, and operating in manner and in combination with a socket *d* in the handle A substantially as specified.

No. 17,877.—JAMES S. HARRIS, of East Poultney, N. Y.—*Improvement in Mop Heads.*—Patent dated July 28, 1857.—The nature of this invention will be understood by reference to the claim and engravings.

Claim.—Constructing the wire jaws B B so as to nearly or quite

enclose oblong spaces, substantially as represented and described, for the purpose of more effectually embracing and holding the cloth. Also, the pin D, when used in combination with the jaws B B, substantially in the manner and for the purpose set forth.

No. 1[illegible],645.—EDWARD MINGAY, of Boston, Mass.—*Improvement in Pitchers for Molasses, &c.*—Patent dated November 17, 1857.—By inspection of the engravings, which respectively represent the cover as open and shut, the manner in which the spout *e* is raised and lowered through the lever-arms *i k* by the movement of the cover will be readily understood; so that, while the liquid is being poured out of the nose *b b*, and the cover is opened, the spout is turned down out of the way, as shown in figure 2; while, as soon as the cover is shut, the spout will be raised, as shown in figure 1, so as to catch the drippings and convey them to the main body of the pitcher through the nose *b b*.

Claim.—The means employed to prevent the dripping of liquids in pitchers for containing liquids, the same consisting of the movable spout or jaw actuated by the opening or closing of the cover, so as to raise and lower the said spout or jaw, substantially as set forth.

No. 18,546.—ALONZO HEBBARD, of New York, N. Y.—*Improved Water-Cooling Pitcher.*—Patent dated November 3, 1857.—A is the shell of the pitcher. This shell is made in two parts, as shown by the dotted line *b*. Surrounding the earthen or porcelain pitcher C is a covering of felt D. To protect the upper edges of the felt and pitcher from the action of the liquids, when being poured in or out of it, a flange E is soldered to the inside of the neck or shell, which is luted or cemented down upon and over the edges of the pitcher; F is the cover attached to the shell.

The inventor says: I *claim* the use of the combination of the woolen cloth or felt covering as an elastic, non-conducting packing for a porcelain or glazed ware pitcher, with the said porcelain or glazed ware interior pitcher, and external metallic shell or pitcher, for the purpose of making a water-cooling pitcher, as set forth.

No. 18,621.—HERMAN N. DEWEY, of Berlin Heights, Ohio, assignor to B. L. HILL & Co., of Berlin Heights, Ohio.—*Improvement in Quilting Frames.*—Patent dated November 10, 1857.—A A represent two standards, which support the arms and bars to which the quilt is to be attached; B B two arms, which are mortised through the centre, so that the standards A A can pass through them; C C two bars, which slip into the spring jaws *b* in each end of the arms B. To the arms B and the bars C listing or other suitable substance is tacked, as seen at C, to sew the quilt to.

The inventor says: I do not claim an adjustable quilting frame as such.

But I *claim* the vertically adjustable arms B B, having spring jaws for adjusting the bars C C, as set forth.

No. 17,588.—JOHN C. SCHOOLEY, of Cincinnati, Ohio.—*Improvement in Refrigerators.*—Patent dated June 16, 1857.—The atmospheric air passes through opening *c* into the ice chamber A, and

passes in the direction of arrows into the preserving chamber B, whence it escapes through passage *d*.

The inventor says: I do not claim the use of an opening to admit external air into ice, nor do I claim the use of an opening to allow air to escape after having passed into the preserving chamber.

Neither do I claim the use of a partition between the ice and preserving chamber, with its openings above and below. I do not claim any of them separately.

But I *claim* the employment of the double register *r* and openings *c d*, in combination with the partition *g* and the openings *f m*, the whole arranged and operated substantially in the manner and for the purposes set forth.

No. 17,980.—JACOB PETERS, of Hummelstown, Pa.—*Improvement in Sausage Cutters.*—Patent dated August 11, 1857.—The meat being placed in box A, it is fed to the cutters in sashes *a b* by means of follower *z;* and as the crank *q* is operated, a vibrating motion is given to said sashes by means of rod F, lever *k* turning on fulcrum *x* and rods *l m*. The sash *a*, having vertical knife blades, is vibrated in a vertical direction; and the sash *b*, having horizontal blades, is vibrated in a horizontal direction; and these cutters, in conjunction with the blade *d*, cut the meat to the required fineness.

Claim.—The employment of the vertical sashes *a* and *b*, the one arranged within the other, their knives interlapping and operating in different directions, for the purpose of sawing and more effectually preparing the meat, as set forth and described; it being understood that I do not claim the main features of the machine, as it is not, in that respect, new; nor yet the device merely of giving a sawing motion to the fixed knives of meat cutters, this also being not new; but only the arrangement here specified of two sets of knives working into each other, with motions in opposite directions.

No. 18,778.—W. SNIFF, of Fultonham, Ohio.—*Improvement in Sausage Machines.*—Patent dated December 1, 1857.—This invention is designed to make sausage direct from the meat and other substances or materials used at one operation. It consists in combining a cutting and stuffing device, whereby said devices may, from one and the same shaft, be operated simultaneously and conjointly, so that the meat and other substances which are generally used may, as they are cut of the proper degree of fineness, be forced into the cases.

The inventor says: I am aware that teeth or knives have been attached to a rotating drum or cylinder, and stationary knives or cutters have been used in connexion therewith, and placed within a suitable box; I therefore do not claim broadly and separately the cutting device shown.

Nor do I claim broadly the employment of a plunger working within a cylinder or trunk for stuffing cases with sausage meat; for such devices are in common use, although arranged differently from that shown and described.

But I *claim* the stuffing device formed of the cylindrical trunk H, provided with slots k k^1 and the plunger J, attached to the rod K, as

shown, when the above parts are arranged relatively with the box B, for the cutting device, so that the within described parts may operate conjointly, as and for the purpose set forth.

No. 18,748.—JOHN IRWIN, of Philadelphia, Pa.—*Improved Standard for Seats.*—Patent dated December 1, 1857.—A represents part of the seat; the rest is supported by the rod B, upon which is cut a male screw which works up and down in the female screw E, the latter being embraced by a coiled spring D; the upper end of this spring bears against a shoulder H, while the lower end of said spring rests upon the lower collar G, in the socket C. Thus it will be seen that the standard B and screw E are supported by spring D, while they are free to play up and down in socket C, being held steady by the two collars G. The screws adjust the seat to the desired height.

Claim.—The combination of the screw and spring, forming an improvement in adjustable and elastic standards for seats, as set forth.

No. 18,713.—O. W. STOW and AUGUSTUS BARNES, of Southington, Conn.—*Improvement in Candle Snuffers.*—Patent dated November 24, 1857.—When the two parts A B are put together, a hollow cavity $h\ h^1$ is left in the middle, which receives the usual coil spring; a rivet passes through the centre of the cavity, and unites the two wings; the snuffers are then complete and ready for use. The engravings and claim further explain the nature of this invention.

Claim.—The snuffers A B, struck out of sheet metal, the legs formed with and constituting a portion of the wing blanks, and the cutter wing B, bent as set forth, so as to form a good cutting edge, as described.

No. 18,513.—G. I. MIX, of Wallingford, Conn.—*Improvement in Making Iron Spoons.*—Patent dated October 27, 1857.—This invention will be understood by an examination of the claim and engraving.

Claim.—The inventor *claims* having the rivet or pin which secures the handle and bowl of the spoon together formed on the handle at the same time, and of the same piece of metal, by the same die which gives form to the handle, whereby an improved article of manufacture is provided, to wit: an iron spoon, with the rivet forming part and parcel of the handle, substantially as and for the purposes set forth.

No. 18,517.—RUSSEL B. PERKINS, of Meriden, Conn.—*Improvement in Making Iron Spoons.*—Patent dated October 27, 1857.—The principle of this improvement consists in forming upon that part or edge of the bowl to which the handle is to be attached a tongue or projection; and, when forming the handles, in making in like manner, at the end where the bowl is joined, a recess fitted to receive this tongue, which, when applied, is secured by closing the edges upon said tongue by a drop or die.

The inventor says: I *claim*, as my improvement in the manufacture of spoons, forming the bowl with the tongue a^1, and the end of the handle with a cavity fitted to receive said tongue, and then attaching the same together, substantially in the manner set forth.

No. 16,350.—BENJAMIN CLARK, assignor to E. L. FERGUSON and C. B. CLARK, of Oriskany Falls, N. Y.—*Improvement in Extension Tables.*—Patent dated January 6, 1857.—The nature of this invention will be understood by reference to the claim and engravings.

The inventor says: I do not claim the stiffening of hinged joints by rigid bars or lips; neither do I claim the use of folding rails for extension tables.

But I *claim* the combination of the fixed side pieces H I with the table leaves F and table legs D, in the manner specified; the side pieces H serving the double purpose of holding the table firmly together when compacted and closed, and also serving, in conjunction with pieces I, to give stability to the frame, when the same is opened or extended.

No. 18,636.—HENRY GROSS, of Tiffin, Ohio.—*Improvement in Extension Tables.*—Patent dated November 17, 1857.—In the illustration, L L are the legs connected by the cross-piece A, and having the frame B C. The pieces C forming the end of the table when closed. E E and D D are the two systems of stretchers hinged to the cross-pieces B and D^1—one system at the extremities of said pieces, and the other in the middle thereof.

Claim.—The combination of the two systems of stretchers E and D with the stay rods *a a*, constructing and operating as and for the purposes set forth.

No. 18,733.—CHARLES B. CLARK, of Mount Pleasant, Iowa.—*Improvement in Extension Tables.*—Patent dated December 1, 1857.—A A^1 represent two strips which form the ends of the extension frame, and B B^1 are the hinged or folding rails which form the sides of the extension frame, there being two rails at each side. The inner ends of the rails B B are connected by hinges *a a*, and the outer ends are connected to the ends of the strips A A^1 by hinges *b*.

The inventor says: I do not claim broadly the employment or use of folding rails applied to extension tables, irrespective of the arrangement shown.

Neither do I claim the employment or use of fixed side pieces, irrespective of the peculiar arrangement; as shown and described, for said parts have been previously used.

But I *claim* having the jointed or folding side rails B B^1, made of unequal lengths, and applied to the end pieces A A^1, as shown in the drawings, for the purpose set forth.

No. 18,891.—EDWIN A. CURLEY, of Westfort, Conn.—*Improvement in Extension Tables.*—Patent dated December 22, 1857.—This invention consists in constructing the slides C C of the table of sheet metal plate, corrugated and bent so as to form tubes D D, each of which will be provided externally with a dovetail tongue *a* on one side, and an inversely corresponding groove *b* in the other side, so that the tongue of one tube will fit in the groove of either of the other tubes, and the groove of one tube receive the tongue of either of the other tubes;

whereby perfectly working slides are obtained, and the table rendered stiff and firm.

Claim.—Constructing the slides C D of sheet metal, corrugated and bent by any proper means, so as to form tubes provided with longitudinal dovetail tongues and grooves, by which the tubes are connected and allowed to slide longitudinally, as and for the purpose set forth.

No. 18,042.—WILLIAM B. FARRAR AND JONATHAN H. FARRAR, of Evans's Mills, N. C.—*Improvement in Self-waiting Tables.*—Patent dated August 25, 1857.—In using this table, two separate cloths *d e* are used, the cloth *e* to cover the disk C, which can be turned by taking hold of flange G and giving it a revolving motion around centre shaft D, and the cloth *d* to cover the stationary table B on which the plates rest.

The inventor says: We make no claims to a table made with a central revolving part C, as this is common.

But we *claim* the central revolving disk C, when fitted down into the circular hole *a*, constructed with a thin lip F projecting horizontally from the upper portion of its circumference, and with a rib of ring form projecting from its under side and near its circumference, substantially as and for the purpose set forth.

No. 17,087.—JAMES GREENHALGH, Sr., of Waterford, Mass.—*Improvement in Tea Kettles, &c.*—Patent dated April, 21, 1857.—The cover C, when fitted within the flange *a*, will keep the handle B in a vertical position, and will thus prevent it from becoming heated at any time; and if the handle B be moved to either side, the cover C will be raised, as represented in dotted lines.

The inventor says: I do not claim having a wire pass from the top of the cover through the handle of the culinary vessel, so that, by pulling the wire, the cover may be raised without burning the hand.

Neither do I claim a sliding stop arranged on the bail, and acting in combination with a peculiar construction of eye for keeping the bail of a culinary vessel elevated, as in the patent of Thomas H. Dodge, 1853.

I *claim* connecting the cover C with the bail or handle B by means of the bar D passing through a slot *b* in the bail or handle, substantially as shown, for the purposes specified.

No. 16,752.—E. F. PARKER and J. SMEAD, of Proctorsville, Vt.—*Improvement in the Manufacture of Tin Pans.*—Patent dated March 3, 1857.—Figs. 1 and 2 illustrate the manner of forming the lock on the pan bottom, which is "struck up," and of uniting the lock between the side and said bottom. Fig. 3 represents the side and bottom of the pan as it appears before going through the seaming rolls, shown in fig. 2.

Claim.—A milk pan with a struck up bottom, and united to the side in the manner and for the purpose described.

No. 18,653.—H. NICHOLS WADSWORTH, of Washington, D. C.—*Improvement in Tooth Brushes.*—Patent dated November 17, 1857.—This invention embraces the following features:

1st. The concave form of the surface of the bristles, as represented from A to B in fig. 1.

2d. The circular form of the surface of the bristles, as represented from C to D in fig. 2.

3d. The projection of the bristles beyond the end of the brush, as represented in fig. 2, at letter D, and which projection improves the brush by being at a still greater acute angle with the back.

The wedged-shaped back, as represented in the engravings, for the purpose of allowing the brush to penetrate thoroughly under the muscles of the cheek and around the back or molar teeth.

The inventor says: I *claim* a tooth brush having all the described features, combined and arranged as and for the purpose set forth.

No. 18,630.—Francis Colton, of New York, N. Y.—*Improvement in India Rubber Springs for Upholstering Purposes.*—Patent dated November 17, 1857.—In applying this invention to a sofa or chair, the form as shown in fig. 4 is employed, which is simply a joining together of several of the single springs, as shown in the illustrations, by joining pieces *e e e*. It is secured to the webbing or cross-pieces which support it by cords *z z z*.

The number of springs to be employed in a bed may be four or more. A single spring, like that shown at fig. 4, is sufficient for a chair bottom and in the upholstery of a sofa.

The elastic portion of the spring is represented by the letter O, and consists of a ring or cylinder of vulcanized India rubber, which is made to vary in its weight and dimensions; to accord with the space it is to occupy, and to the amount of springing power desired.

The inventor says: I do not claim the discovery of the elastic property of a ring or cylinder of India rubber, when placed upon its circumference.

But I *claim* the form and combination of a vulcanized India rubber ring with the steadying post, together with the application of the same, in the manner and for the purposes specified.

No. 18,929.—William Robinson, of Highgate, Vermont.—*Improvement in Vegetable Cutters.*—Patent dated December 22, 1857.—The inventor thus describes the construction of his invention: On a suitable frame *a a* two cylinders *b* are situated. I projects from its periphery hook-formed teeth, which come to a flat sharp edge at their outer points; the hooks on the two cylinders turn towards each other, in the direction of the revolution, on one cylinder axis; there is a spur wheel *c* that gears into a pinion on the axis of the other cylinder outside of the frame, so that one cylinder turns three, more or less, times to the other's once. The result of this is, that any proper article thrown into the hopper *d* that surrounds the cylinders will be seized and drawn gradually in by the action of one cylinder, while the other is tearing pieces off from it, till the whole is reduced to its proper state for feeding to cattle or other animals.

Claim.—The employment of hooked cutters running at different velocities on parallel cylinders, the whole being arranged and combined in the manner and for the purposes set forth.

No. 16,667.—H. A. WILLARD, of Westminster, Vermont.—*Improvement in Machines for Cutting Vegetables.*—Patent dated February 17, 1857.

Claim.—The cutter B, in combination with the metallic cutter-plate A, together with the particular arrangement of the cutters upon the cutter-plate, in such a manner that several are acting upon the vegetable at the same time, and that as soon as one has commenced another immediately follows; so that while a portion are leaving the vegetable and holding it firmly to the plate, others are commencing, preventing, by this arrangement the vegetable from rolling or dodging, and keeping it continually in contact with the knives, thereby cutting with greater rapidity, with less power, and leaving the cut vegetable in a more desirable shape for mastication, than any machine now in use.

No. 18,965.—WILLIAM M. GALUSHA and BENJAMIN W. SAFFORD, of Arlington, Vt.—*Improved Washboard.*—Patent dated December 29, 1857.—A represents the frame of a washboard, which may be constructed in the usual way, viz: two side pieces or strips *a a*, connected by cross-bars *b b*. B is the corrugated portion of the board; this is formed of sheet metal corrugated. The form of the corrugations is oblong, the ends *e* and sides *f* being inclined, and the edges *g* somewhat rounded. The part B has its edges fitted in grooves *h*, formed in the inner of the strips *a a* and cross-bars *b b*, and is thereby secured to frame A.

The inventors say: We do not claim broadly the employment or use of a corrugated sheet metal plate for the rubbing surface of a washboard for they have been previously used.

But we *claim* corrugating the sheet metal plate in the form specifically as shown and described for the purpose set forth.

No. 18,483.—JOEL WISNER, of Aurora, N. Y.—*Improved Washing Machine.*—Patent dated October 20, 1857.—The inventor thus describes the construction of this machine: I construct my knuckle rubber collar washing machine in the tub form, with fluted sections in the bottom; short rock shaft and fluted rim around the side of the tub, as shown in fig. 2, letter B; the upper dish or knuckle, with fluted sections and quarter moon fluted piece, as shown in fig. 3, letter C; fluted knuckle edge, letter D, shown in engravings; clamp in the form of a quarter moon, with spiral springs E.

The inventor says: I *claim* the use of the fluted rim B on the inside of the tub, the quarter moon knuckle edge rubber C and D, the serrated clamp E with springs, arranged and operating in the manner and for the purposes set forth, made of metal or wood.

No. 18,489.—SMITH SKINNER, of Lowell, Mass., assignor to WILLIAM HOWARD SKINNER, of Lawrence, Mass., and JACOB NICHOLS, Jr., of Lowell, aforesaid.—*Improved Washing Machine.*—Patent dated October 20, 1857.—The nature of this invention consists in a washboard so constructed that the tipping elliptical slats in the board have a movement, or tip back and forth on pivots in the centre of their ends, so that by the movement and pressure of the clothes upon them they

will tip; the clothes being first pressed against their flat surfaces, and then by a continuous movement being broken or crimped down over the sharp edges of the slats, so as to effectually wash them; and the same effect is imparted to the clothes, whether they are moved in either direction on the board.

This invention consists, further, in a rubber so constructed with serrated sections passing down and independently of each other, and to swing or move above the washboard, as to bring the serrated surfaces in contact with any portion of the clothes.

Claim.—The inventor claims the washboard constructed of a number of elliptical slats, or their equivalents, arranged in such a manner that they may tip back and forth, as the clothes H are pressed and moved on them, sufficiently to present their flat instead of their sharp surfaces to the clothes, and be prevented from tipping too far by wire rods G, which pass through holes *c* (of a larger size than the rods) formed through each of the slats, essentially in the manner and for the purposes set forth.

Aalso the serrated sections T, or their equivalents, in the rubber, so constructed and arranged, in combination with the washboard C, that they can be swung back and forth to rub and wash the clothes, essentially in the manner and for the purposes set forth.

No. 18,518.—Thomas J. Price, of Industry, Ill.—*Improved Washing Machine.*—Patent dated October 27, 1857.—This invention consists in having two frames—one stationary and the other adjustable—placed or fitted within a suitable tub or box, and provided with horizontal vibrating slats, arranged and operated so that the clothes are subjected to the necessary rubbing, in order to thoroughly cleanse them.

Claim.—The stationary frame B and adjustable frame D, placed within the box A, and provided with vibrating slats *a i*, operated substantially as shown for the purpose specified.

No. 18,642.—Abraham Huffer, of Hagerstown, Md.—*Improved Washing Machine.*—Patent dated November 17, 1857.—The engraving and claim show the nature of this invention.

Claim.—The combination of the shallow concave, formed of rollers D D and feeding boards E E, with the ribbed cylinder A B, for the purpose of making the washing machine self-feeding and self-clearing, so as to pass the clothes alternately into the water and the air, thus bleaching as well as cleansing them, and keeping the clothes in the upper strata of water away from the dirt, which is precipitated to the bottom of the tub.

No. 18,633.—Alexander Dickson, of Hillsboro', N. H.—*Improved Washing Machine.*—Patent dated November 17, 1857.—In this improvement two rubbers, Q and M, act simultaneously, and between them the clothes to be washed are placed; they act in connexion with two pumps D D, one at each end, which force the water through the texture of the clothes, and wash the dirt away as fast as it is loosened.

The inventor says: I do not claim any of the parts, when viewed in

the abstract; for they are well known devices, and have been used separately for similar and analogous purposes.

But I *claim* the combination of the oscillating rubber, stationary bed, and the pumps, arranged to operate conjointly, as and for the purpose set forth.

No. 18,695.—JOHN D. JENKINS, of Jacksonville, Ill.—*Improved Washing Machine.*—Patent dated November 24, 1857.—The nature of this invention consists in a horizontal frame, hinged at one end to the rear of the tub, and resting pendulously on a bed of revolving rollers, and overhung by an adjusting spring bracket, and carrying a series of vertical rubbers or beaters and squeezers, which are pivoted at the centre of their height to said frame, and at their upper end to vibrating connecting rods of a crank shaft, in such a manner that they each have a circular oscillating motion.

Claim.—The arranging in the manner described, and relatively to each other for united use, of the rubber frame J, rubbers L L, roller B^2, connecting rods M, crank shaft K, overhanging spring bracket *e*, roller bed B B, and variable discharge roller B^1, substantially as and for the purposes set forth.

No. 18,720.—THOMAS A. DUGDALE, of Richmond, Ind., assignor to Himself and GEORGE TAYLOR, of Richmond, Ind.—*Improved Washing Machine.*—Patent dated November 24, 1857.—In the engraving, F is a false bottom or lower rubbing disk, which floats in the water in the tub by means of four cords *f f f f*, two only of which are shown in the engraving.

There are four holes in the disk F, situated as shown in fig. 3; there are also four holes in the tub bottom exactly corresponding with those in disk F. They are marked 1 2 3 4 in both the disk and tub bottom. Thus a cord passes from 1 in the disk to 2 in the tub, and from 2 in the disk to 1 in the tub. The cords are also similarly passed from 3 to 4, and from 4 to 3.

This arrangement allows the disk F to adjust itself readily to the clothes between it and disk E^1, thereby securing a uniform pressure, whether the bulk of clothes be large or small.

The inventor says: I am aware that vibrating tubs, with stationary lids or disks, are now in use; such parts, therefore, of themselves, I do not claim.

But I *claim* the combination of the floating disk F, cords *f f f f*, and vibrating tub C, with the stationary disk E, substantially in the manner and for the purpose set forth.

No. 18,721.—DAVID ELLIOT, of Pembroke, N. H., assignor to Himself and ISAAC WHITE, of Merrimack county, N. H.—*Improved Washing Machine.*—Patent dated November 24, 1857.—The claim and engravings explain the nature of this invention.

Claim.—A tub or vat, with corrugated parallel sides and a semi-circular or curved bottom, in combination with semi-circular rubbers, corrugated on their sides, and arranged to traverse on the axle or on a traversing axle, provided with a spring to draw the rubbers one

towards the other, and both towards one side of the vat, in the manner described, for the purpose of washing and squeezing clothes.

No. 18,889.—HENRY L. BRIDWELL, of New Albany, Ind.—*Improved Washing Machine.*—Patent dated December 22, 1857.—A is a corrugated cylinder made and attached to the machine. B is a single knuckle secured to the pieces marked D; *e e* are rollers, also attached to pieces D. C C are rods, four in number, two on each side of the machine; said rods stand in a vertical position, and are secured to the pieces D, while the other ends operate against nut *c; c c* are nuts passing over a screw on the upper ends of rods C C, and serve to elevate or lower the pieces D, and consequently the knuckle B and rollers *e e*. E is the frame of the machine, and *h* is the handle attached to the corrugated roller.

Claim.—The combination of the corrugated cylinder A with the single oscillating, self-adjusting knuckle B, when arranged in the manner set forth and for the purpose described.

No. 18,898.—GEORGE HALL and JOHN FORDYCE, of Morgantown, Va.—*Improved Washing Machine.*—Patent dated December 22, 1857.—The object of this invention is to cause the clothes to turn over and change positions at each operation of rubber K.

The claim and engravings explain the nature of the improvement.

The inventors say: We are aware that aprons have been used for carrying up the clothes to the washing apparatus, and that clothes have been washed between aprons. These we do not claim.

But we *claim*, in combination with the rubber K, the apron *h* attached to the spring N at one of its ends, and to said rubber by its other end, and passing underneath the roller *m* for the purpose of turning the clothes over and over at each operation of the rubber, as set forth.

No. 18,956.—THOMAS C. CHURCHMAN, of Sacramento, Cal.—*Improved Washing Machine.*—Patent dated December 29, 1857.—The nature of my invention consists in the application of the friction and pressure necessary in washing clothes by means of a washboard, combining a horizontal and perpendicular motion produced by the turning of a crank A with a fly-wheel and the running wheels G of a curved track F, whereby the labor is easily performed.

Claim.—The construction of a washing machine combining a horizontal and perpendicular motion produced on the washboards D and E, by the turning of the crank and shaft A, and the running of the wheels G G in curved tracks F, as represented and described.

No. 16,567.—AMOS JACOBS, deceased, LYDIA JACOBS, administratrix, of Ithaca, N. Y.—*Improvement in Washing Machines.*—Patent dated February 3, 1857.—M Q are standards fastened to cover Z, and support an oscillating engine. The action of the dasher V on the piston rod H against the clothes will cause the tub Y to revolve upon its axis T.

Claim.—The combination of an oblique beater or dasher V with a tub Y, constructed substantially as described, in such a manner that

the stroke of the dasher or beater causes the tub or vessel to revolve for the purposes of washing, cleaning, stamping, and rinsing clothes.

No. 16,715.—RICHARD COLLINS, of Chicopee, Mass.—*Improvement in Washing Machines.*—Patent dated March 3, 1857.—The soap is contained in the cavities M, each provided with a cover O and a passage P leading downwards to the clothes. Each of the passages P is provided with a stop-cock R, which may be opened or closed more or less.

Claim —Combining with and arranging in the vibratory dasher B, as described, one or more soap receptacles or chambers M, each provided with an aperture of discharge and a stop-cock or faucet, or the equivalent therefor, disposed substantially in manner and so as to operate as specified.

No. 16,751.—LOUIS C. RODIER, of Detroit, Mich.—*Improvement in Washing-Machines.*—Patent dated March 3, 1857.

The inventor says: I do not claim a washing machine having a flexible apron or jacket suspended upon springs and partly enclosing a revolving cylinder armed with ordinary flutes.

But I *claim* the revolving cylinder K, composed alternately of flanges J and spaces opposite said flanges, in combination with the jacket G, arranged and operating substantially in the manner and for the purpose set forth.

No. 17,030.—THOMAS A. DUGDALE, of Richmond, Ind.—*Improvement in Washing Machines.*—Patent dated April 14, 1857.—The clothes to be washed are placed between the rubber C and washboards D; and as the rubber is worked by means of handle I, the washboards B are moved apart on the rollers D, the lower rollers gliding on ways *a*, while the upper rollers bear against the cords E, the washboards eventually coming in contact with the rollers F on the vibrating frames F. The cords E, which are attached at one end to the frame of the machine, and at the other to knobs H, pass through the stationary plates G; and by turning knobs H, the cords E can be tightened, and the knobs H can be secured in any desired position by inserting pin *m* in corresponding holes in plate G.

Claim.—Combining the vibrating frames and rollers F F F F, the plate G, the knob H, and pin *m*, with the washboards B and rollers D, substantially as described.

No. 17,113.—JOSEPH F. POND, of Cleveland, Ohio, and CHARLES L. POND, of Buffalo, N. Y.—*Improvement in Washing Machines.*—Patent dated April 21, 1857.—The clothes to be washed are placed upon the apron *h*, and, passing between the fluted rollers *a b c*, they are subjected to the action of said rollers. When it is desired to stop the motion of the rollers *a b*, the rod *p* is raised until its projection *s* rests on the plate *q*; by this motion the arms *n* of rod *m* are brought within the concavities of rollers *a b*, and thus arrest their motion.

The inventors say: We make no claim to the rollers and apron.

But we *claim* the combination of the vibrating stop piece and its rod *p* with the screwing plate *q*, and the spring bearings of the rollers,

when said parts are used in connexion with fluted rollers, arranged and operating as described.

No. 17,166.—JOSIAH MAYES, of Cohoes, N Y.—*Improvement in Washing Machines.*—Patent dated April 28, 1857.—The nature of this invention will be understood by reference to the claim and engraving.

The inventor says: I do not claim the beaded strips *d g*, irrespective of their peculiar position and arrangement, as shown, for they have been previously used. Neither do I claim a rotating reciprocating rubber placed within a tub, for they are well known and in common use.

But I *claim* attaching the beaded strips *d g* to the bottom E of the tub B and the face of the rubber C, substantially as shown and described, for the purpose set forth.

No. 17,180.—HENRY D. YOURY, of Junius, N. Y.—*Improvement in Washing Machines.*—Patent dated April 28, 1857.—The clothes to be washed are first put into box 1 to soak, and, when ready for washing, they are laid on the apron 6, in front of the rubber 5; and the apron having but a slow motion, while the rubber 5 has a quick motion, the pieces of clothes in passing on under the rubber are sufficiently washed; thence they pass on to the box 14, formed by the movable lid 15, which, while the washing process is performed, is turned back against the end of box 1, leaving a space between it and the roller sufficient for the clothes to drop into the water and be wet, and then again passed on to the apron 6 and under the rubber, until sufficiently clean; the lid is then dropped forward, thus forming a box for the reception of the clothes after being washed.

Claim.—The mode of operating the apron 6 to give its surface a slower motion than the surface of the rubber 5, in combination with the shaft 8 and apron 6, the side plate, and hook 13, constructed and operated in the manner and for the purposes set forth.

No. 17,377.—ABRAHAM HUFFER, of Hagerstown, Md.—*Improvement in Washing Machines.*—Patent dated May 26, 1857.—By turning crank J, pulleys I and H are rotated, the latter operating rods G and levers E F; which arrangement serves the purpose of adjusting the distance between the cylinder A and the roller concave B.

Claim.—The arrangement of slotted levers E and F, upright G, springs C and D, connected and operated upon by the pulley taps H H, pulley I, cord L, shaft K, and crank J, in the manner described, for the purpose of facilitating the parallel adjustment of concave B, as set forth.

No. 17,784.—ADAM FISHER, of Leavenworth city, K. T.—*Improvement in Washing Machines.*—Patent dated July 14, 1857.—The article to be washed, when properly soaped, is inserted between the rollers A B, the operator taking hold of the other end of the garment; and during the process of washing, the buckets C pour the water down over the

garment. The cylinder B, being hung upon springs *b*, freely yields to the different thicknesses of articles.

Claim.—The combination of the bucketed wheel A, constructed as described, with the plain surfaced rubbing wheel B, the whole constructed and arranged substantially as described.

No. 18,041.—HIRAM F. EVERITT, of Benton, Pa.—*Improvement in Washing Machines.*—Patent dated August 25, 1857.—At the commencement of the downward stroke, the rubber F has the position shown in full lines; and as it descends it carries the reel B around its axis a short distance, causing the lower rollers of the reel to drag the clothes in the direction of the arrow, while the rubber assumes the position shown in dotted lines.

The inventor says: I make no claim to any of the parts composing my machine, when separately considered.

But I *claim* the combination, as described, of the adjustable reel, fluted concave, and swinging rubber, constructed, arranged, and operating substantially as and for the purposes specified.

No. 18,045.—WILLIAM M. HAMMOND, of Jonesville, Michigan.—*Improvement in Washing Machines.*—Patent dated August 25, 1857.—The clothes are pressed down upon the balls A, and are subjected to a constant rolling pressure by operating follower F by means of handle H.

The inventor says: I do not claim either the tub or reciprocating follower to be any part of my invention, since they have been used, as in Wisner's, and other improvements, (patents); neither do I claim anything of the nature of floating balls, as the balls in my improvement practically do not float, and should be made of some heavy material; nor do I claim anything like rollers, conical or otherwise, requiring pivots upon which to turn, for the reason that the balls are a marked improvement, having no pivots either to rust, or wear out, or to injure the clothes.

But I *claim* the bed formed of loose weighted balls covering the tub bottom, in combination with the cellular disk rubber, arranged and operating substantially as and for the purposes set forth.

No. 18,050.—JUSTIN LOOMIS, of De Ruyter, N. Y.—*Improvement in Washing Machines.*—Patent dated August 25, 1857.—The rubber R can be withdrawn from the tub by swinging it, together with tube P and braces *b*, on its hinged joint *a*. When in operation, the tube P is held in place by means of braces B.

Claim.—The tubular guide piece P, forked brace *b b*, joint *a*, swivel pin *d*, and socket *e*, in combination with braces B B and the rubber shaft S, constructed, arranged, and operating substantially as and for the purposes specified.

No. 18,062.—ISAAC A. SERGEANT, of Springfield, Ohio.—*Improvement in Washing Machines.*—Patent dated August 25, 1857.—The tub B is supplied with tke requisite quantity of suds, and the clothes are placed on the bottom of the secondary tub E, the frames I I^1 being

previously thrown back, as represented in dotted lines in figure 1. The frames I I^1 are then thrown forward, and the end of frame H is depressed by the foot of the operator, and the secondary tub E is thereby raised, and the clothes are subjected to the pressure of the rollers in the frames I I^1. The shaft K is then rotated by turning crank L, and the tub E will be rotated in consequence of the pressure of roller M upon the clothes.

Claim.—1st. The employment within a water-tight tub B of an adjustable, rotating, perforated platform or secondary tub E, in the manner substantially as described.

2d. Providing the outer end of roller M with a shoulder n^1, of larger diameter than the body of the roller, substantially as and for the purposes set forth.

No. 18,067.—Abram Wood, of Camden, N. Y.—*Improvement in Washing Machines.*—Patent dated August 25, 1857.—The nature of this invention will be understood by reference to the claim and engraving.

Claim.—The hinging of the board F at G G, so that the disk C and its shaft may be conveniently raised out of the tub and thrown back while the clothes are handled, and again conveniently let down by the operation; and by which arrangement the whole machine, including the bench A, may be lifted and moved from place to place, as described, the whole being arranged and combined substantially in the manner set forth.

No. 18,168.—Philip N. Woliston, of Springfield, Ohio.—*Improvement in Washing Machines.*—Patent dated September 8, 1857.—In this washing machine the coarser clothes may be placed under the rubber B, and the finer clothes between the rubbers E B; the coarser clothes are thus subjected to a greater pressure than the finer ones, and both may be washed at the same operation.

The inventor says: I do not claim the tub A, provided with a rotating, reciprocating rubber disk; for this is a well known device, and has been previously used.

Neither do I claim any particular form of cleats or rubbers *l* on the rubber disks.

But I *claim* the auxiliary rubber disk E, in combination with disk B, provided with cleats or rubbers *l* on both sides, and the cleats *l* on the bottom of the tub A, the whole being arranged for the purposes set forth.

No. 18,407.—Benjamin H. Pearson and Daniel B. Neal, of Mount Gilead, Ohio.—*Improvement in Washing Machines.*—Patent dated October 13, 1857.—The inventors, in describing the operation of their improved machine, say: In the operation of this machine, the cross piece *c* being detached from the lever D, we raise cross piece E, to which are attached the levers C C^1 and B B^1, shaft G, and the upper head A; this being done, we proceed to place the clothes to be washed between the two heads, A A^1; we then replace the cross piece E, attach the lever D, and proceed to operate it backward and forward.

The inventors say: We do not claim any of the members of this machine to be new, for they may all be found in every-day use; but we are not aware that the peculiar arrangement and operation of the devices which we have employed in our invention have ever before been used in this connexion and for this purpose.

We *claim* the heads or disks A A^1, in combination with the adjustable cross piece F, constructed and operating in the manner and for the purpose set forth.

No. 18,773.—CHARLES C. SCHMITT, of New York, N. Y.—*Improvement in Work-Boxes.*—Patent dated December 1, 1857.—The claim and engravings explain the nature of this invention.

Claim.—I do not claim, separately or apart from the general construction of the box or escritoir, any of the parts described.

But I *claim* a work-box and escritoir constructed as described, viz: the hinged or folding front side *n*, provided with the flap *p*, the recesses in the top to receive the writing and sewing implements, the secret drawers *z z* and *a*, concealed by the sliding plate or bottom *t*; the whole being arranged or disposed as shown and described, for the purpose of forming a combined work-box and escritoir.

XVIII.—ARTS POLITE, FINE, ETC.

No. 17,473.—CHRISTOPHER D. SEROPYAN, of New York, N. Y., assignor to WILLIAM COUSLAND, of New York, N. Y., and JOHN D. BALD, of Philadelphia, Pa.—*Improvement to Prevent Counterfeiting Bank Notes, &c.*—Patent dated June 2, 1857.—This invention consists in printing bank notes on colored paper, with an ink which is equally or more fugitive than the tint of the paper, so that in destroying the tint of the paper, the letters thereon shall be equally destroyed; and, as the color of the bank note cannot be produced by the photographic process, it follows that bank notes which are printed with such fugitive ink cannot be counterfeited.

Claim.—The application of at least two colors to the manufacture of bank notes, drafts, and all other papers representing value, both of which will equally or nearly so absorb the chemical rays of light, or neither of which will transmit or reflect such rays, and leave the color or the tint of the paper less fugitive than the color of the other parts.

No. 16,829.—E. F. FRENCH, of Franklin, Vt.—*Bill-Holder.*—Patent dated March 17, 1857.—This invention consists in having a series of pockets placed between two stiff lids or covers, the pockets and lids being placed upon a rod or axis which passes through their lower ends. The pockets and lids are connected at their lower ends and at one side by a cord, which determines the length of the movement of

the several pockets upon their axes; the whole being so arranged that when the device is closed, the bills will be retained in a portable case; and when the device is opened, the pockets will be spread out side by side, and the endorsements on the upper or outer ends of the bills fully exposed, so that any particular one may be instantly seen.

Claim.—The pockets B, placed between the two lids or covers A A, the pockets and lids being connected by a cord *b*, and having a rod or axis C passing through them at one end, substantially as shown and for the purpose set forth.

No. 17,477.—REUBEN G. ALLERTON, of New York, N .Y.—*Blotter.*—Patent dated June 9, 1857.—The nature of this invention will be understood by reference to the claim and engraving.

Claim.—A blotter, constructed substantially as described, having a convex surface containing the blotting material, with a handle in the opposite side, so as not to revolve, but to be used by a single rocking motion.

No. 17,299.—ARCHIBALD H. ROWAND, of Alleghany, Pa.—*Improvement in Binding Books.*—Patent dated May 12, 1857.—The nature of this invention will be understood by reference to the claim and engravings.

Claim.—The combination of the rollers *a* in the groove or book carriage *b*, as applied to books to aid in moving them in their racks in a vertical position.

I further claim the application of the spring, as above described, and used in compressing the extremities of the arch of the head band D, and thereby causing said head band to maintain a circular or arch-like form, by means of which the leaves of a folio or book are kept from drooping or sagging when the book is in a vertical position; this spring I use according to convenience or choice, either applied on the outside of the outer back or next to the head band, or enclosed between the outer and inner backs.

No. 17,149.—GEORGE HODGKINSON and THEODORE F. RANDOLPH, of Cincinnati, O.—*Machine for Cutting Indexes to Blank Books.*—Patent dated April 28, 1857.—O represents one end of the book with one cover under the platform H, the other cover is raised with all the leaves intended to be used for the letter *z*. The edge of the book being placed against the gauge L, the right hand end of the book corresponding with the mark on scale T, the knife D is brought down by pressure upon a treadle; the spring J then raises the cutter D, and the operator raises the number of leaves for the next letter above *z;* and upon the book being adjusted against scale T, the operation of cutting is repeated.

The inventors say: We do not claim any of the devices separately.

But we *claim* the arrangement of the machine described, for the purpose set forth.

No. 18,935.—FREDERICK SUTER, of Brooklyn, N. Y.—*Machine for Turning the Leaves of Books.*—Patent dated December 22, 1857.—This

invention consists of a box A containing the mechanism, to which a standard B is attached to support the music book. On the top of this standard a sliding piece C is fixed, capable of being regulated to suit the height of the music, and provided with a spring catch *n* to hold the upper end of the music book. The lower end is held fast by the pin O to the slide *m*, and acted upon by a spring. This slide *m* is pulled back, while the book is placed against the stand by means of the projection W passing through the top plate D. The engravings and claim further explain the nature of this invention.

The inventor says: I *claim*, first, the arrangement of the lever H with the described mechanism operating in the manner specified, for the purpose of taking hold of the music leaf, turning the same over, and afterwards letting said leaf loose again and dropping down so as to pass under the same, in the manner substantially as described.

Second. I claim the fingers 3 and 4, operating in the manner and for the purpose specified.

No. 17,480.—THEODORE BERGNER, of Philadelphia, Pa.—*Machine for Rounding and Backing Books.*—Patent dated June 9, 1857.—The book to be backed is placed between the clamps F, with its face downward and resting on block *l*, as represented in figure 3, and subjected to a moderate pressure by means of hand wheel L. By turning hand wheels P, pinions *q* and segments M are operated, the latter drawing downward clamps F. By an additional turn of hand wheel I, the book is compressed tighter between the clamps F; whereupon the sliding table D is pushed in the position represented in figure 2, and the centre of the book held vertically with the centre of motion of the swing frame Z by throwing in catch i^1. A vibration of the swing frame Z and the consequent pressure of roller B^1 over the whole surface of the back will perform the backing. This being done, the swing frame is allowed to rest against the stops h^2, while at the same time the catch i^1 is disengaged by the pressure of the foot on the plate m^1 of lever H^1, when the spiral springs G^1 will pull the sliding table D, fig. 2, to the left, thus allowing a ready removal of the finished book.

The inventor says: I am aware that a roller and swing frame are employed in the backing machine of John A. Elder, patented July 26, 1853. I therefore do not claim these parts.

But I *claim*, first, giving a sliding motion to the clamps F F by means of segments M M and pinions *q q*, or any equivalents to the same, substantially in the manner and for the purpose specified.

Second. The sliding table D, plate E E^1, and clamps F F^1, in combination with the swing frame Z and roller B^1, the whole being constructed and operating substantially in the manner and for the purpose set forth.

Third. The employment, in combination with the sliding clamps, of adjustable blocks I, substantially in the manner and for the purpose described.

No. 18,245.—ISAAC HERRMANN, of New York, N. Y.—*Safety Clasp for Bracelets, &c.*—Patent dated September 22, 1857.—In using this invention, when the clasp is closed and it is required to be opened, the

ornamental cap piece K is pressed upon; this brings down the inclined plane surface F against the inclined plane surface G, and throws the rod L on one side, as shown in the figure, and releases the catches E E; on releasing the pressure, the catches are thrown back by the spiral springs.

The inventor says: I *claim* the application of the two inclined plane surfaces F and G, and the plate B attached to the rod L, for the purpose set forth, to secure more safely clasps on bracelets, and for other purposes.

And I also claim the combination of the steadying plate B with the parts above mentioned, which plate prevents the catches E E from turning aside; the whole is in combination—that is, plate B and inclined planes F G on rod L, as set forth.

No. 16,808.—James M. Ross, of Springfield, Mass.—*Guard for Breast Pins.*—Patent dated March 10, 1857.

Claim.—The additional guard *g h h*, as applied in the manner and for the purposes substantially as set forth.

No. 17,881.—Charles Ferdinand Kolb, of Philadelphia, Pa.—*Mode of Fastening Breast Pins*—Patent dated July 28, 1857.—In closing this pin, the pin A is withdrawn within the tube B, the pin C sliding in the longitudinal groove of the tube B; when the pin A has been withdrawn to its fullest extent, the point of pin A can be inserted into catch D through slot *a*, and the pin A is then drawn forward, and pin C is turned into the transverse groove of the tube B, thereby securing the point of pin A permanently in catch D.

Claim.—The improvement as specified.

No. 17,800.—John F Mascher, of Philadelphia, Pa.—*Spiral Catch for Breast Pins.*—Patent dated July 14, 1857.—The nature of this invention will be understood by reference to the claim and engravings.

Claim.—Constructing breast pins, brooches, the other ornamental fastenings for dress, &c., with a spiral catch, substantially as and for the purpose described.

No. 17,647.—Charles Thurber, of Worcester, Mass.—*Improvement in Caligraphs.*—Patent dated June 23, 1857.—A line of letters at O^1 E^1 is transferred in a reduced scale to a paper on tablet F by means of the pantograph N^1 S D; when one line has been written, the rod N^1, in retracing, moves lever J on its pivot A^1, turning the ratchet wheel G one notch, which causes the tablet F to be shifted the space of a line, when the next line can be written, as described.

The inventor says: I do not wish to be understood as making claim broadly to the combination of two pens or markers by levers of equal length and jointed rods, and these features, combined with a table or desk by universal joints; as such combination has long been known and used in an instrument termed polygraph, for writing two exact copies simultaneously, and has been entirely superseded by the copying press for taking impression copies, and the mode of operation resulting from the said combination is substantially different from my invention, and

could not produce the result for which my said invention was designed. Nor do I wish to be understood as making claim to the combination of a stylus or tracer with a pen or marker by levers of different lengths connected by jointed rods, as such a combination has long been known and employed as a pantograph for copying drawings, so as to reproduce them on an enlarged or reduced scale, and could not alone achieve the purpose for which my invention is designed.

But I *claim* combining a stylus or tracer with a pen or marker, by means of levers of different lengths connected by jointed rods, substantially as described, so that the pen or marker may follow accurately, but on a reduced scale, all the movements imparted to the stylus or tracer; in combination with the connexion of this mechanism with a desk or table, by means of an universal joint, substantially as described, to give freedom of motion in all directions to the stylus or tracer and to the pen or marker, whereby a person can write the usual sized characters by tracing characters of a large size, as set forth.

I also claim the stylus or tracer and the pen or marker, combined, substantially as described, with the apparatus, or its equivalent, for shifting the paper; whereby the paper is shifted to the distance equal to the space between two lines, by carrying back the stylus or tracer preparatory to tracing another line, substantially as set forth.

No. 16,700.—David A. Woodward, of Baltimore, Md.—*Solar Camera.*—Patent dated February 24, 1857.—Fig. 1 represents a section of the instrument; fig. 2 represents it when used as a camera obscura; and fig. 3 when used as a camera lucida.

The inventor says: I do not claim the photographing camera obscura, or the solar reflector and lens, or any part thereof, of themselves.

But I *claim* adapting to the camera obscura a lens and reflector in rear of the object glass, in such manner that it is made to answer the two-fold purpose of a camera obscura and camera lucida, substantially as and for the purposes specified.

No. 16,600.—John F. Mascher, of Philadelphia, Pa.—*Process for Ornamenting Daguerreotype Cases, &c.*—Patent dated February 10, 1857.—The compound referred to in the claim consists of one fluid ounce of water, six grains of bichromate of potash, and fifty grains of gelatine.

Claim.—The process of ornamenting daguerreotype cases or other articles in imitation of tortoise shell, wood, or marble, or other substances, by first covering the surfaces thereof with stained or colored paper of suitable character, or staining or coloring the surfaces themselves in a suitable manner, and afterwards coating them with gelatine and bichromate of potash, in any manner substantially as specified.

No. 18,288.—Isaac Lindsley, of Providence, R. I.—*Improvement in Setting Diamonds, &c.*—Patent dated September 29, 1857.—In this improvement no difference is made in the construction of the blank or piece A, which is to constitute the setting, except to raise points or studs *i i* at suitable parts of the veins *a a*, as shown in figures 5 and 6, the former of which figures is a plan, and the latter a section. The

production of those pins or studs involves no change in the construction of the die by which the plate A is formed, but the drilling of small holes therein at the places where the points or studs *i i* are required. The blank A thus formed with points is drilled or cut out between the veins, and then bent or pressed into the proper form to receive the stones, in the same manner as the blank first described; but the stones on being put into their places are not put so deeply into or between the veins, which are merely required to support them at the back; they are then secured in their places by spreading the points with suitable punches to make them lap over the stones in suitable places; thus, with this improvement in setting, the stones are only covered here and there.

The inventor says: I do not claim, generally, the setting of stones in or between points.

But I *claim* the raising of points or studs *i i* on the veins of the blank by the same punching operation which forms the blank, thereby producing a superior setting, which gives a greater brilliancy to the stones, at a cost of labor not greater than that of the setting commonly used in cheap jewelry.

No. 18,198.—GEORGE GILLETT, of Little York, N. Y.—*Improvement in Painters' Easels.*—Patent dated September 15, 1857.—This easel can be turned vertically on standard A; it can further be turned on point *a* in the plane of circle C, and set to any desired angle by passing catch F into one of the notches of circle C. It can further be turned on the hinges H, and can be secured to any desired position by inserting catch G into one of the notches of arc D.

Claim.—The combination of the three motions obtained by the two semi-circles and the rotary motion of the standard, together with the latches and notches in the semi-circles to retain the position, and also as an application to the easel or painting-stand.

No. 17,741.—ALBERT H. JOCELYN, of New York, N. Y.—*Method of Backing Electrotype Plates.*—Patent dated July 7, 1857.—The nature of this invention will be understood by reference to the claim and engravings.

Claim.—Backing shells for printing, embossing, and like purposes, by pressing type or other suitable metal down upon the shell while in a fluid or plastic state, substantially in the manner and for the purpose described and shown.

No. 17,290.—ROBERT MUCKELT and WILLIAM RIGBY, of Salford, England.—*Improvement in Machines for Engraving Cylinders.*—Patent dated May 12, 1857.—The original design which is to be transferred to the cylinder *e* is placed on the platform *b* of the machine, and the pointer *z* which is attached to the carriage A can be moved over said design, the carriage A following on the rails B. The arm X of said carriage operates lever *m* of the fulcrum *n*, which actuates arm *t* by means of pin *r*, causing the block *j* and arm *h*, together with instrument for engraving attached thereto, to move in the direction parallel with the axis of the cylinder *e*. The carriages C sliding on rails D

actuate the lever J, which is attached to one of said carriages, which, by means of stud L, operates lever O, which imparts motion to the sliding rails *g*, thereby partially turning pulleys *f* and the cylinder *e*. By means of these two motions of the engraving tool *h* and cylinder *e*, any design can be transferred from the platform *b* to the cylinder *e*, and the proportions of said copy can be regulated by adjusting the studs L and *r* to their respective positions on levers *m* and J. The arm *a**, which is pivoted to a slide, can be used for shading the design with straight lines, the pointer *k* being guided by it as by a rule.

Claim —First. The levers *m* and J, and the parts in combination therewith, for varying the relative proportion between the original design and that produced when applied to machinery for engraving designs on cylindrical or other surfaces.

Second. The ruler or guide plate *a*, when used in the manner and for the purposes described.

No. 17,146.—CHARLES H. FIELD, of Providence, R. I.—*Machine for Engraving Designs on Watch and Locket Cases, &c.*—Patent dated April 28, 1857.—The block F, with the locket thereon, being placed in the socket in the centre of the pattern disk C, and power being communicated to pulley Q upon shaft H, the plate B descending, the disk thereon slides beneath the stud J, and in so doing withholds the tool *h* from block F until the edge of the pattern at j^2 passes the end of the stud, when, by the action of spring 7, the tool *h* strikes into work, the continued motion of which produces a line until the tool is tripped and withdrawn from contact with the work by the edge at j^1 meeting the stud J. The motion of the plate B, from this point of the stroke to its completion, is employed to remove stud J from contact with the disk by the lower edge of the plate coming in contact with screw *k* on lever K, which raises the reverse end of the same, and brings the wheel *y* thereon in contact with the lower end of arm E ; at the same time tappet f^2 comes in contact with stud *v*, which, by means of tappet f^1, draws pawl *u* back one tooth, when the descending stroke is completed, and the plate B ascends, and in so doing liberates the tappet *b*, causing the wheel D to move one tooth by the reaction of the spring *g*. The tappet at the top of the plate also casts off one tooth, and holds the disk C in this position until the succeeding cut is completed ; as the plate B approaches the end of its ascending stroke, and after the edge of the pattern at j^2 has passed beneath the stud J, the chain *m* gradually lightens and raises the short arm of lever K, and in so doing releases the arm E upon the tool post, and allows the tool to resume its former position.

The inventor says: I do not claim two rosettes or irregular disks acting upon two studs for the purpose of determining the length of the line, nor do I claim an eccentric adjusted by the foot of the operator for this purpose.

But I do *claim* the variable pattern disk and combination of the same with the stud J for governing the cutting of the tool.

Also, the combination and arrangement of the tappets f^1 f^2 and the stud *v*, also the tappet *b*, in connexion with the same, for imparting and regulating the motion of the pattern disk.

Also, the arm E and the lever K, and the mechanisms attached thereto, the whole being so combined and arranged as to render the machine self-operating.

Lastly, the adjustable pitman, as set forth, for imparting the required motion to the vertical sliding plate B.

No. 16,576.—THEODORE BERGNER, of Philadelphia, Pa.—*Machine for Making Envelopes.*—Patent dated February 10, 1857.

The inventor says: I am aware that jets of compressed air have been used to assist in folding envelopes, as is the case in the machine of M. Remond, which is unlike my invention.

I do not claim the folding hinges exclusively, a similar device having been used heretofore.

I am also aware that atmospheric pressure is claimed for holding the blank during the operation of folding in Wm. H. Lowe's patent, April 8, 1856; but I *claim:*

First. Giving the sliding rod D a downward movement by means of link E, lever F, rod G, and cam H, in the manner and for the purposes set forth.

Second. Giving a sliding movement to the frame V by means of link x, lever W, rod z, and cam A^1; thereby operating, by means of lifters g^1 g^1 g^2 g^3, the folding hinges i^1 i^1 i^1 i^2, in the manner described.

Third. The compartments r r, in combination with pipes S and cylinder R, the latter being provided with piston t^2, which is operated by cam S on the shaft I, the whole being constructed substantially in the manner set forth.

Fourth. The stamp P^1, working in the swivel-bearing O^1, and operated by cam Q^1, pin r^1, rod S^1, and cam T^1, in the manner and for the purpose specified.

Fifth. The employment of cam 4, lever 1, rod Z^1, arm y^1, and spiral spring 5, to turn swivel-bearing O^1 on its axis, substantially in the manner and for the purpose set forth.

Sixth. Operating the pasting vessels l^2 l^2 by the lever M^1, rod n^1, and cam N^1, substantially as described.

Seventh. Applying the curved arm H^1, working in a slot k^1, through the folder P; for removing the finished envelopes to the inclined table K^1, and operating it by arm G^1 and cam arm F^1, as shown.

No. 18,857.—HORACE A. NATHANS, of Philadelphia, Pa.—*Flexomanus.*—Patent dated December 15, 1857.—A represents the frame of the machine; B, five successive cranks; E E^1, pulleys on either end of the shaft b b, which is revolved by means of cords F F around the grooved pulleys D D^1 and e e^1; C^1 C^2 C^3 C^4 C^5, rings attached to the cranks B by means of a wire; G G, thumb screws for attaching the machine to the piano; J, frame of the piano; H I, the keys of the piano; K K, handles for turning pulleys D D^1; L, a bar for supporting the wrist, also for keeping the machine at a proper distance apart, and serving as a shaft for pulleys D D^1 to revolve on; M, a bar for the purpose of keeping the frame at a proper distance apart; N N, two projecting pieces for attaching the machine to the piano.

Claim.—Combination of a series of cranks B B B B B and rings C^1

C^2 C^3 C^4 C^5, arranged and operating as described, together with the bar for supporting the wrist.

No. 17,054.—JOHN PFAFF, of Philadelphia, Pa.—*Improvement in Flutes.*—Patent dated April 14, 1857.—The nature of this invention will be understood by reference to the claim and engravings.

The inventor says: I do not desire to confine myself to the exact form of bent tube shown, as the same may be modified and ornamented in various ways without altering the desired result.

But I *claim* the main gear wheel *b*, so that it shall operate as a barrel head or cover to the barrel, and have the retaining power applied to it, substantially as set forth.

No. 16,489.—ANTHONY KUHN, of Baltimore, Md.—*Improvement in Keyed Harps.*—Patent dated January 27, 1857.—The nature of this invention will be understood from the claims and the engravings.

Claim.—A sounding board B^1 and suspended bridge *f*, in combination with a solid bridge *g*, arranged at a distance from or beyond the sounding board, so that the strings extend across an open space between the sounding board and solid bridge, substantially as described.

Second. I claim extending the strings one-half their length or more, through an open space beyond the sounding board, substantially as described; so as to make the instrument produce sounds like a harp, instead of sounds similar to a piano.

Third. I claim arranging the hammers *b* above the key board L, and making them strike the strings towards and opposite to the sounding board, near the suspended bridge, instead of near the solid bridge, substantially as described.

Fourth. I claim increasing the number of strings in an instrument having the properties of a harp, substantially as described; so as to make the flats and sharps without the pedals used in the old harp, so as to dispense with the pedals for that purpose.

No. 18,060.—THOMAS ROBJOHN, of New York, N. Y.—*Inkstand.*—Patent dated August 25, 1857.—By opening the cover *d*, the thumb *e* depresses pin *i* and the diaphragm *a*, and the fluid within the inkstand is raised in cup *b*.

Claim.—The arrangement for flexing the elastic diaphragm by so attaching a mechanism in connexion with a cover for the ink cup that the opening and closing thereof shall effect the raising or discharge of the ink or other fluid into or from said cup, as described.

No. 17,147.—KINGSTON GODDARD, of Philadelphia, Pa.—*Improvement in Inkstands.*—Patent dated April 28, 1857.—By means of this invention, a common ink-bottle A can be readily converted into a fountain inkstand, by simply inserting the bent tube B C in the cork I of said bottle, and by fastening the bottle to a frame D E.

Claim.—The application of the bent tube C to a common ink-bottle, the whole arranged as described, whereby said common ink-bottle is converted into an effective and economical fountain inkstand.

No. 17,373.—BENNETT JOHN HEYWOOD, of Leicester Square, Middlesex county, England.—*Improvement in Inkstands.*—Patent dated May 26, 1857 —By pressing down the India rubber valve *e*, the finger which imparts the pressure closes the air passage *h*, and the air between the disk *e* and *e** will be compressed and forced through the opening of valve *e**, as represented in fig. 2, and the compressed air in the inkstand *a* forces the ink through tube *b* into dipping cup *d*. By depressing valve *e**, without closing aperture *h*, the atmospheric pressure within and without the vessel *a* will become equalized, and the ink in cup *b* will return to vessel *a*.

Claim.—The means set forth of forcing ink into the fountain of inkstands, by the combined action of the lower valve and the aperture in the top plate or disk, which acts alternately as a closed and open valve, by the application and removal of the finger.

No. 18,277.—JOHN T. FOLWELL, of Philadelphia, Pa.—*Improvements in Fastenings for Jewelry.*—Patent dated September 29, 1857.—Fig. 1 is a view of the sleeve button when closed as it is when on the sleeve; A is the ornamental front of the button; B is a round or oval post with a slit filed in it to receive the thick end of a tongue for a joint which works as a hinge, with a rivet passing through the centre of both; C is the round post or catch with a notch filed in it to secure D, which is the tongue that reaches from B at one end to C at the other; E is a sheath fitting tightly around C, and is shifted by lever F, which reaches the edge and is turned over on the front edge, so that it can be moved by the thumb nail; F is the lever attached to E to shift it.

The inventor says: I claim the round post with a notch filed in it to receive the pin or tongue in, and a sheath fitting tight around the post and shifted by a lever; so that when in one position the tongue can be put into the notch, and when put into the opposite position it secures the tongue in its place, so that it cannot come out without shifting the lever, as described.

No. 17,167.—THOMAS MOTLEY, of Brooklyn, N. Y —*Mode of Constructing Letters for Signs, &c.*—Patent dated April 28, 1857.—The nature of this invention will be understood by reference to the claim and engraving.

Claim.—The new manufacture of frame or skeleton letters described; that is, the outline of each letter or numeral is formed of a skeleton frame, open both front and back, or entirely through, as shown.

No. 17,137.—CHARLES G. BLOOMER, of Wickford, R. I.—*Mode of Constructing Lockets, &c.*—Patent dated April 28, 1857.—This invention consists in forming the rim of lockets of one single piece of plate, by passing it through a series of stamps or dies; and the engraving represents the cross sections of a rim as it is formed in succession by such dies, figure 1 showing the plate before it has been operated upon by the dies, and figure 4 showing the finished rim.

Claim.—First. The making of locket rims out of single pieces of metal, instead of two or more, which are everywhere used.

Second. The making of them out of sheet metal instead of wire.
Third. The making of them substantially in the manner described.

No. 17,755.—D. L. SPRAGUE, of Townsend, Vermont, and RILEY BURDITT, of Brattleboro', Vermont.—*Melodeon Attachment.*—Patent dated July 7, 1857.—The nature of this invention will be understood by reference to the claim and engravings.

Claim.—First. The hammers *h* of the harp attachment, arranged between the keys and reeds of the melodeon, and combined, substantially as described, with the inverted jacks *e* attached to the bottom of the keys; whereby the ordinary keys of the melodeon are made to serve, without any extension, to play the harp attachment.

Second. The attachment of the string-dampers *j* of the harp attachment to the melodeon keys in a manner to operate substantially as described.

Third. The employment of a bar G, extending below the whole of the hammers, and operating, substantially as described, to move all the hammers simultaneously to such a position that the jacks are inoperative upon them.

No. 16,574.—J. C. BRIGGS, of Woodbury, Conn.—*Improvement in Melodeons.*—Patent dated February 10, 1857.—The object of the expression chamber C is to facilitate the production of a swell without separating or changing the tone of such swell.

The effect of the exhaustion of chamber C is a tendency to collapse, so as to cause the valve *f* to contract the opening of port *d*, and thereby to reduce the admission of wind, thus giving a soft expression to the instrument. The above tendency may be made greater or less by increasing or diminishing the force of the spring *a*, which tends to raise the board H. This may be done by means of pedal rod *g*, or otherwise.

The inventor says: I disclaim everything in my device which is similar to Swan's invention, or to Hamlin's, mentioned.

I do not confine myself to the particular means described of graduating the force of the spring *a*, nor to the particular position of the expression chamber, relatively to the exterior of the wind-reservoir and pump.

But I *claim* the expression chamber C, with its valve *f*, arranged and operating in the manner and for the purposes substantially as described.

No. 16,760.—THOMAS F. THORNTON, of Buffalo, N. Y.—*Improvement in Melodeons.*—Patent dated March 3, 1857.—By means of knob *j* the arms *h*, with the eccentrics G, can be brought into position fig. 1 or fig. 2. If in position fig. 1, the bar F (which extends across the instrument, and is connected to the levers E by pins *e*) is allowed to descend and bring the levers E within range of the keys C, thus coupling the two sets of valves to be actuated by one set of keys C. The ends of the levers E are adjustable upon the push-down pins b^1, so that both valves may be opened simultaneously by the keys C.

Claim.—The combination of an extra adjustable lever E with each of the push-down pins b^1, in the manner substantially as described.

No. 16,786.—RILEY BURDITT and HATSEL P. GREEN, of Brattleboro', Vt.—*Improvement in Melodeons.*—Patent dated March 10, 1857.—If the parts are in the position represented in fig. 2, each of the keys A will operate the push-down pins *a*, and also the pins *d* for sounding the octave notes; if in the position of fig. 1, the pins *d* will be below the hollow portion *f* of the keys, and consequently will not operate.

The inventors say: We do not claim to be the first inventors of musical instruments in which two or more notes in different octaves are sounded by pressing a single key, for we are aware that organs, melodeons, pianos, &c., having such features, have long been known. The patent of Whipple & Bowe, 1855, is an example in point. In their instrument, each set of connecting levers has its own fulcrum board; one of said boards is hinged and rendered movable, so that its set of levers may be thrown into or out of connexion with their corresponding keys by raising or lowering the fulcrum board.

The employment of double fulcrum boards involves increased expense in construction and want of compactness. Besides, the end connexion between the levers and the keys requires to be flexible to a certain extent; which is expensive, lacks accuracy, is liable to become loose, cannot be adjusted readily, nor conveniently removed or applied to the instrument.

But, by our arrangement, the levers are all fulcrumed on one and the same fulcrum board, which slides, and thus brings the levers into or out of connexion with the keys. Our plan is simpler, more compact, cheaper, and more easily applied than the invention above described. The ends of our levers are united by means of rigid adjusting screws, by which the levers may be adjusted with the utmost accuracy and convenience. But we do not claim such adjusting screws, as they are seen in J. F. Thornton's device, 1857.

Our fulcrum board and levers may also be removed or replaced readily, without the necessity of putting the end of each individual lever, one by one, into its loop by hand, as in Whipple & Bowe's device.

We do not claim the combination of levers with push-down pins that have shoulders or collars upon them. This is seen in H. N. Goodman's melodeon, patented 1853.

Neither do we claim any part or feature of the described invention which is seen in any other analogous instrument; but, to the best of our knowledge and belief, it is new to have all the levers fulcrumed upon a single movable board, as set forth.

We *claim* having the fulcra of the connecting levers B B located upon a single movable board C, substantially as described.

No. 17,501.—WILLIAM EVANS, of Lockport, Ill.—*Improvement in Melodeons.*—Patent dated June 9, 1857.—As the swell C closes upwards, the chamber formed between it and the reeds A is enlarged instead of being diminished, as it is when it closed downwards upon board G, in the old way; and it opens with the current of air, instead of in opposition to it. By this arrangement a greater harmony is obtained between the lower and higher reeds.

Claim.—The arrangement of the swell to close by a movement up-

wards or away from the reed tubes *a*, substantially as specified, instead of downwards or towards the reed tubes in the heretofore usual manner, for the purposes specified.

And I also claim the stop D, against which the swell closes, attached to the reflecting board B, so as to be removed therewith to leave the reeds exposed, as described.

No. 18,399.—STANLEY A. JEWETT, of Cleveland, Ohio.—*Improvement in Melodeons.*—Patent dated October 13, 1857.—The nature of this invention consists in graduating the quantity of space contained in the air chambers above and below each particular reed upon a geometrical scale, by which a uniformity of volume of sound is produced compared with the particular key or reed ; in producing a perfect *mute*, whereby any one of two or more sets of reeds may be used by one valve; and in the arrangement of devices whereby the swell valve is operated by the bellows without the intervention of a pedal, producing a gradual swell and diminuendo, the same being under the control of the performer.

The inventor says: I *claim*, 1st. The production of a perfect mute, by combining the action of the air passages *m* N O, or their equivalents, with the mute valve L, as set forth.

2d. In the formation of a gradually increasing diminuendo, by means of operating the swell valve T, by the rising and falling of the bottom board of the bellows, or its equivalent, as specified.

No. 18,676.—E. B. CARPENTER, of Brattleboro', Vermont, and E. N. MERRIAM, of East Poultney, Vermont.—*Improvement in Couplings for Melodeons, &c.*—Patent dated November 24, 1857.—This invention relates to certain mechanism which is employed to combine the valves with the keys in such a manner that any given tone and its octave, with the fifth or tenth, or both of these combined, or any other intervals that may be desired on the same key-board, may be played at one and the same time by pressing a single key.

The inventors say: We *claim*, 1st. The employment of a single series of diagonal levers *o o*, arranged relatively to and combined with the keys by blocks L and jacks N N, substantially as described; whereby a single lever serves not only to couple a key with another to which it stands in the relation of octave, but with other keys with which it stands in different relations, as fifths, tenths, &c.

2d. Supporting the diagonal levers upon a fulcrum board that is arranged between the keys and valves, and applied so as to be capable of rising towards and falling from the keys, with the whole series of levers, substantially as set forth.

3d. Combining the jack N N with the uncoupling bars R^1 P^1, by means of the elastic connexions *r p*, operating substantially in the manner and for the purpose set forth.

No. 18,751.—GEORGE W. LANE and WILLIAM N. MANNING, of Rockport, Mass.—*Pedal Base for Melodeons, &c.*—Patent dated December 1, 1857.—The engravings and claim explain the nature of this invention.

Claim.—1st. The arrangement of the valves, the reeds, and the air chamber of the pedal base upon the pedal board, or otherwise in an equivalent manner, arranging the same behind the pedals, so that the whole of the pedal base is rendered portable, and can be attached to any instrument by simply connecting its air chamber by a pipe with the bellows of the instrument, substantially as described.

2d. The arrangement of the valves, with their lever-like stems, inclined planes, and springs, substantially as described, for the purpose of combining the valves with the pedals to be operated thereby.

No. 17,196.—JEREMIAH CARHART, of New York, N. Y.—*Improvement in Swells for Melodeons, &c.*—Patent dated May 5, 1857.—By pushing lever *i* towards or from the front of the instrument, the valve F is moved to open or close the holes *a* in the swell E.

Claim.—1st. Providing the swell E with a number of holes, and fitting the same with a valve or valves F, for the purpose of graduating the tone of a portion or the whole of the instrument when the swell is closed, substantially as set forth.

2d. The mechanism for operating the swell valve F, either while the swell is open or closed, consisting of the upright shaft I, with its lever *i* and arm *f*, and the flexible rod *g*, arranged in the manner substantially as set forth.

No. 18,581.—ANDRE ADOLPHE GAGET, of Paris, France.—*Apparatus for Holding Music, &c.*—Patent dated November 10, 1857.—This improvement consists of binding hooks, to be placed at the top and bottom of the sheets, and hold-fast or brace applied to the binding hooks for fixing them in their proper position.

Claim.—The construction and employment of the hooks D and hold-fasts or braces F, in connexion with the back A; for the purpose of binding together music, manuscripts, and other loose papers, substantially as described.

No. 18,284.—AMOS P. HUGHES, of Philadelphia, Pa.—*Improvement in Reed Stops for Musical Instruments.*—Patent dated September 29, 1857.—The nature of this invention consists in forming an air-tight chamber, or one nearly so, with the swell, or by other means, over or outside of the reeds when it is desirable to stop them; and from the chamber so formed a hole or opening is made (independent of those in which the reeds are placed) from the inside of this chamber to the interior of the wind chest or bellows, thereby varying or condensing the air on both sides of the reeds according to the kind of bellows used. This improvement is adaptable to either of the forms of general construction of instruments of that class known as melodeons, seraphines, harmoneums, æolians, and all instruments in which reeds are used.

Claim.—The inventor claims the stopping of reeds by forming an air-tight chamber or chambers outside of the reeds with the swell, or by other means, in combination with the open communication between the inside of the chamber or chambers and the interior of the wind

chest or bellows, or any other arrangement substantially the same, and for the purpose set forth.

No. 16,995.—WILLIAM RANDLE, of Florida, N. Y.—*Improvement in Strings for Musical Instruments.*—Patent dated April 7, 1857.—The nature of this invention will be understood by reference to the claim and engraving.

Claim.—The application of one or more springs applied to each string as described, or its equivalent, and for the purpose set forth.

No. 18,699.—JAMES J. MCCORMICK, of New York, N. Y., and GEORGE CROSSINGHAM, of Croton Falls, N. Y.—*Improved Painters' Striping Instrument.*—Patent dated November 24, 1857.—The object of this invention is to render the painting of stripes, as performed by painters, a more expeditious and less laborious process than usual. It consists in the use of a feeding device in connexion with a pen of peculiar construction, and a pump or cylinder and piston. I represents a series of feeders, which may be formed of flat steel plates E, soldered together at their inner ends, as shown at *f*, and suitable spaces *g* allowed between them, said plates being slotted transversely with the spaces *g*, as shown at *h*; or the feeders may be formed from a solid mass of metal sawed in one direction to form kerfs *g*, at suitable distances apart, and then sawed to form a kerf *h*, which will bisect at right angles the kerfs *g*, the kerfs *h* being sawed from the inner towards the outer end, and to within a short distance of it.

The inventors say: We do not claim broadly the employment or use of a cylinder and plunger attached to a pen, for such a device has been applied to fountain pens and analogous devices.

Neither do we claim separately the pen F, for an equivalent device is in common use for mechanical drawing.

But we *claim* the feeders I, in combination with the pen F, cylinder A, and plunger B, arranged as and for the purpose set forth.

No. 17,184.—BENJAMIN F. RICE, of Clinton, Mass., assignor to BENJAMIN R. SMITH and CHARLES H. MORGAN, of same place.—*Improvement in Machines for Making Paper Bags.*—Patent dated April 28, 1857.—When the machine is in operation, the roll of paper is wound around the roller g^2, and passes therefrom between the creasing rollers n^2 o^2, thence under transverse bar p^2 upon the long former *e*. When arrived at the guides l^2 m^2, it is bent around former *e* so that one edge of it may overlap the other, the lapping part being extended into a curved slot j^3 made through the lower guide l^2, as represented in fig. 2. The paster l^3, working in a vat a^3, lays a narrow layer of paste upon the edge of the paper, which is passed between the pressure roller *p* and the paster l^3. The sheet of paper continuing forward has its lapping edges carried between the feeding rollers *o* k^3, by which the lapped parts of the paper are pressed together. The blade *r* attached to arm *g* now cuts off such a portion of the paper as will correspond to the length of the bags to be made and, during this operation of cutting, the front end of the paper tube is clasped between the paster s^2 and presser r^3, applying paste to said front end. The rollers *m n* now

close the bottom lap down upon the pasted surface, the scraping bars i^2 j^2 preventing the bag from winding on either of the rollers *m n*, which thus discharge the bag from the machine.

Claim.—A combination or machine, composed of machinery for bending a strip of paper around a former *e*, and into a tubular form, so that one edge may be lapped over the other, as described; machinery for pasting such edges, or one of them, and closing or pressing them together, and machinery for cutting the tube crosswise, as described.

Also, the combination of machinery for bending a strip of paper around a former *e*, and into a tubular shape, so that one edge may be lapped over the other, as described; machinery for pasting such edges, or one of them, and pressing them together; machinery for cutting the tube slantwise, as specified, while it is on the former or holder; and machinery for pasting or cementing the said tube near its front end, and bending or lapping the end of the tube on the cemented part, so as to form the bottom of the bag, and discharge said bag from the machine, as specified.

Also, arranging the pitch line of the feeding gear w^2 in or about in the prolongation of the axis of the shaft of its crank, whereby we obtain intermittent and variable motions of the paper, as described.

Also, arranging and operating the cutting knife with respect to the former *e*, so as to cause said knife to cut obliquely across the end of the former, and through the tube of paper, as set forth.

Also, the combination of the paster, the presser, and bending and discharging rollers, or their equivalents; the whole being made to operate together, substantially as described.

Also, combining with the rollers *m n* the mouth bars or scrapers i^2 j^2 applied thereto, in manner and for the purpose as stated.

Also, the improved construction of the cutting knife, viz: with a serrated edge bevelled, substantially as set forth.

No. 17,526.—D. A. Stiles, of West Meriden, Conn.—*Paper File.*—Patent dated June 9, 1857.—To operate this bill file so as to insert bills or letters, the loose top C is raised the proper distance and held until the bills are inserted, and it is then let free. To examine the letters, the loose top must be raised to the position represented in dotted lines in fig. 2, so as to bring the spring catches of said top C in line with the holes *h*, and thus allow the spring E to force them into said holes. By pressing against the barrel ends D, spring E is compressed and top C is moved down on the bills lying on bottom A.

The inventor says: I distinctly disclaim the use of springs for holding down the follower.

I also disclaim all and every portion of my device which is seen in Collard's patent aforesaid, or in any other bill-holder.

I likewise disclaim the broad use of spring catches for sustaining objects; but the combination of a double self-acting spring catch D D with the top or follower C of a bill-holder in the manner described, is, to the best of my knowledge and belief, a new combination, and is of importance and value so far as relates to that kind of instruments mentioned.

I *claim* the combination of the double self-acting spring catch D D with the top or follower C, as set forth.

No. 18,075.—C. Pyle Wiggins, A. H. Nordyke, and Benjamin Strawbridge, of Richmond, Ind.—*Machine for Folding Paper.*—Patent dated August 25, 1857.—The sheet to be folded being laid upon table B, the pulley L is rotated, causing the levers H and H^1 to vibrate on their fulcra *i* and *j*, thereby operating pinions f^1 and g^1, shafts *f* and *g*, pulleys F and G, and, by means of cords c^1 and d^1, the blades C and D. The blade C, as it is operated, makes the first fold, forcing the folded paper through slot *b*, between the guides b^1, while the blade D makes the second fold, forcing the folded paper between the guides b^2. As the blade D enters the throat between the guides b^2, it comes in contact with lever P, pressing it outward, thereby causing the jaw N to clamp the paper against jaw O, and thus to prevent its retraction.

Claim.—First. The combination of the cam wheel L with lever H^1, pinion g^1, shaft *g*, drum G, cords $c\,c^1$, and blade C, for purposes shown.

Second. The combination of the cam wheel L with levers H H^1, pinions f^1 g^1, shafts *f g*, and drums F G, for the purpose of producing an alternate movement of blades C D, as set forth.

Third. The combination of jaws or clamps N O and lever P with blade D, to prevent retraction of the paper.

No. 17,535.—James F. Weeks, of Columbus, O.—*Improvement in Machines for Folding Paper.*—Patent dated June 9, 1857.—A description and engravings of this machine would take up too much space to be given here.

The inventor says: I do not claim the folding of paper by passing the sheets between revolving rollers.

Neither do I claim the arrangement of the rollers in the above described form, as they can easily be arranged to produce any other form of fold desired.

But I *claim* the manner of operating the feed roller and folders by means of friction rollers, or their equivalents, revolving upon the plane of a wheel or wheels (N, figure 6) striking against fingers or tripping arms, or their equivalents, keyed upon the rock shafts to which the feed roller and folders are attached, substantially in the manner described, in combination with spiral springs upon said rock shafts, to return the feed roller and folders to their places, substantially in the manner specified, the whole tending to facilitate the rapid, easy, and certain operation of the machine.

I also claim making slots in said wheel or wheels in which to fasten said friction rollers or their equivalents at any desired point by means of the thimble, bolt, and nut constituting the movable stud, substantially in the manner specified, so that said friction rollers may be moved forwards or backwards to cause the motion of said rock shafts to be, sooner or later, as may be desired, in combination with the rock shaft, spiral springs, rollers, and tapes; the whole operating substantially in the manner described for the purpose of forming any desired folds in paper, using any number of said slotted wheels, fric-

tion rollers, rock shafts, spiral springs, rollers, and tapes, or their equivalents, in combination, necessary for the purpose of producing any number or form of fold required.

No. 18,533.—CYRUS CHAMBERS, Jr., of Philadelphia, Pa.—*Improvement in Machines for Folding Paper.*—Patent dated November 3, 1857.—This invention relates to improvements in the paper-folding machine for which a patent was granted the inventor to October 7, 1856. The claim will show what the nature of these improvements is.

The inventor says: I do not desire to confine myself to the precise form or method of operating the various moving parts of the machine, as they may be considerably modified without altering the result.

I *claim*, first. Forcing the edges of the sheet between the folding rollers, in advance of the middle of the said sheet, for the purpose specified.

Second. Temporarily arresting the motion of the first pair of folding rollers, in the manner described, or any equivalent to the same.

Third. The register pins *q*, in combination with the tubes *p*, when the same are arranged for joint operation, substantially in the manner and for the purpose set forth.

Fourth. The combination of the first pair of folding rollers N and N^1 with the register pins *q*, when the latter operate between the former in the manner described, or any equivalent to the same.

Fifth. Preventing the rebounding of the folded sheet during its passage through the machine, previous to the descent of any of the folding blades, by means of the arresting rollers described, the same operating, in combination with the tapes, in the manner set forth.

Sixth. Dividing the printed sheet into two halves by means of shears arranged, actuated, and constructed as set forth.

Seventh. Discharging free from the machine the strip cut from the folded edge of the sheet by means of a revolving disk arranged and operating in the manner set forth.

Eighth. So constructing and arranging machines for folding sheets of paper, that the two halves of one sheet (said sheets having been printed on both sides from the same form) may be separated from each other and folded in succession.

Ninth. Packing the folded sheets by means of a reciprocating plunger against a frictional plate in a trough, so that the backs and heads of the folded sheet coincide with each other.

Tenth. The employment of the devices described, or any equivalent to the same, whereby the operator can separate the imperfect from the perfect sheets.

Eleventh. Preventing the return of the packed sheets of paper, by means of the catches situated above, and in the corner of the trough.

Twefth. The combination and arrangement by which the operations described are performed simultaneouly or in succession to each other in the same machine.

No. 17,776.—EDWARD BAPTIS, of Hudson, N. Y.—*Pen and Pencil Case.*—Patent dated July 14, 1857.—By turning the tube B, the pen slide D and pencil tube C will be moved in opposite directions, one

being drawn within the case as the other is being shoved out by the action of the grooves *d* and *e*. By making the pitch of these grooves varying, the pen slide and pencil tube will be operated in such a manner that both may be brought within the case A, or one may be shoved out.

The inventor says: I do not claim the employment or use of two spiral grooves placed in reverse positions, or one having a right and the other a left thread, and so arranged as to operate simultaneously the pen and pencil slides; for spiral grooves have been previously used for this purpose.

I *claim* the employment of such grooves when made with a varying pitch, substantially as described for the purpose set forth.

No. 16,711.—George Hunt Byron, of Governor's Island, N. Y.—*Pen and Pencil Holder.*—Patent dated March 3, 1857.—The inventor says: I do not claim the diagonal frames nor the holders.

I *claim* the attachment of the handles of the holders to a diagonal expanding frame and the general arrangement.

I also claim the handle A, and the arms *d*, working by pins in slots in the attached holders, and secured by thumb-screws to the handle A.

Neither do I limit myself to any number of holders, which may consist of any required number.

I also claim its application by attaching pens, known as "music pens," instead of the ordinary writing pens, for ruling several staves of music at one operation.

No. 18,365.—A. F. Warren, of Brooklyn, N. Y.—*Fountain Pen.*—Patent dated October 6, 1857.—The improvement in this invention consists in having the valves placed in the tube of the pen, or its fountain, both of which are attached to one and the same rod, and so arranged that while one valve serves to regulate the size of the discharge orifice, through which the ink flows to the pen, the other serves as a cut-off, and isolates a small quantity in the lower part of the tube or fountain above it. By this arrangement the ink is not forced or fed to the pen under a variable pressure, and the lower part of the tube may be readily supplied with ink, as the occasion may require.

One object in this invention is to arrange the plates which are attached to the pen in such a manner that the pen when foul may be readily cleansed. This is accomplished by pivoting said plates to the pen, so that they may, when the pen is detached from the tube or fountain, be turned round, leaving the pen fully exposed.

The inventor, in stating what he claims as his improvements, says: I do not claim the employment or use of a valve *b*, placed at the discharge end or orifice of a tube or fountain A, to regulate the flow or supply of ink to the pen, for that has been previously used.

But I *claim*, first, the supplementary valve or cut-off *d*, used in connexion with the valve *b*; both valves being within the tube or fountain A, and placed on the same rod *c*, substantially as and for the purpose set forth.

I do not claim broadly the plates *f g*, for they have been previously used.

But I claim attaching said plates *f g* to the holder D, by means of the pivot *h*, for the purpose specified.

No. 16,496.—JOHN F. REEVE, of Richmond, Va.—*Writing Pen.*—Patented January 27, 1857.—On pressing the point of the pen on the paper, the two halves $c\ c^1$ will simultaneously turn on the pin, which passes through the lug *a*, and at the same time the ends of the arms acting upon the inclined sides of the wedge-shaped piece *h*, the arms *c* and c^1, as well as the points of the pen, will open. When the pressure ceases, the spring D raises the arms *c* and c^1 until their points bear against the narrowest portion of the wedge-shaped piece *h*, while the spring E draws the two arms as well as the points of the pen together.

The inventor says: Although I have shown a peculiar arrangement of joints, springs, and wedge, I do not confine myself to the precise form or disposal of the several parts, as the same may be considerably modified without altering the result.

I *claim*, first, the so jointing together of the two pieces C and C′ of rigid or non-elastic metal or other material, that the same may form a pen, the required opening and closing of the point of which may be effected by the greater or less pressure of the said point on the paper, assisted by the within described springs and wedge, or equivalent device.

Second. The regulating spring E, as applied to the arms *c* and *c′*, in the manner and for the purpose set forth.

No. 18,265.—JOSEPH W. STRANGE and SAMUEL DARLING, of Bangor, Me.—*Improvement in Pencil Sharpeners.*—Patent dated September 22, 1857.—In the engravings, *a* is the hollow frustrum of a cone, armed with a knife *b*, attached to the slot *c*, in its side, for reducing the wood. This hollow frustrum terminates in the space *d* within the ring *e*, into which space the lead protrudes, while the wood is being reduced. A second smaller hollow cone *i*, whose axis is at right angles with that of cone *a*, and this smaller cone has a narrow slot in its side armed with a knife for reducing the lead to a point.

The inventors say: We do not claim the mere multiplication of cutters of various sizes in the same stock or holder, but the combination of two cutters, constructed and arranged to reduce the wood and the lead separately, substantially as set forth.

No. 16,514.—JOSEPH C. SILVEY, assignor to THOMAS J. DOBYNS, of New Orleans, La.—*Improvement in Fountain Pens.*—Patent dated January 27, 1857.—The guide rod C extends upwards, and is armed with a spiral spring, which not only serves to press down the rod promptly, so as to shut off the flow from the point when withdrawing the instrument from use, but to regulate the flow according to the pressure thrown upon the projecting point of the guide rod in its bearing on the paper.

Claim.—I claim, as my improvement upon the ink pencil, described in the patent of E. Jordan, of 20th November, 1849, the employment of a separate or independent spring to the guide or stopper rod, for

operation with it, and the pointed fountain case or handle, as shown and described, and for the purposes specified.

No. 17,298.—CHARLES ADOLPHUS ROSEFIELD, of Columbus, Ga.—*Improvement in Fountain Pens.*—Patent dated May 12, 1857.—The pen is supplied with ink from the reservoir by means of a quill-conductor E, the ink escaping through hole *a* of the reservoir, and passing down the swivel-piece *b* to the quill-conductor E.

Claim.—The detachable quill-conductor E, fitting laterally in or to a rigid upper conductor or conductor holder, arranged to freely swivel on a centre pin or bearing at the bottom of or below the reservoir for action with the pen and pen-holder, as shown and described.

No. 17,761.—F. A. WAIT, of Philadelphia, Pa.—*Improvement in Metallic Pens.*—Patent dated July 7, 1857.—By forming the pen with slots *b*, a great degree of elasticity is gained, while the spring *c* serves to hold the points of the pen in place.

Claim.—The arrangement of the spring-guard *c* and slots *b* in a pen *a*, operating as described and for the purposes set forth.

No. 17,162.—GEORGE MATHIOT, of Washington, D. C.—*Mode of Constructing Photographic Baths and Pans.*—Patent dated April 28, 1857.—The mixture of one part of shellac to two parts of fine sand is heated in water and stirred until the substances are thoroughly incorporated; and when the mixture has acquired the proper consistency it is formed into the desired shape, and when the vessel is cooled to ordinary temperature, it is ready for use.

Claim.—To construct the baths and vessels for photographic uses of an impervious substance formed by the combination of a cement with an earthy matter, or its equivalent; and also to form the bath or other vessel by first forming the vessel of unglazed pottery, or its equivalent, and making the pottery impervious by saturating it with wax, gum, balsam, resin, pitch, stearine, or siccative oil, or other equivalent for any one of these.

No. 16,637.—LUZERNE M. BOLLES and WASHINGTON G. SMITH, of Cooperstown, N. Y.—*Photographic Camera Box.*—Patent dated February 17, 1857.—1 is the nitrate of silver, 2 the water, and 3 the developing bath. By the use of this swing-frame, the ground glass is not removed in operating. It can be swung back so as to bring the plate over the bath to be used, when the plate may be slid down into the same. An indicator E, at the outside of frame A, denotes the precise points where the plate is in line with the baths.

Claim.—1st. A swinging frame A, with ground glass permanently attached, as described and set forth for the purpose specified.

2d. The arrangement of the baths in the camera box to correspond with the operations of the plate-holder through the mortise and grooves, as set forth and described.

No. 18,218.—J. ROBERT WERNER, of New York, N. Y.—*Improvement in Diaphragms for Photographic Cameras.*—Patent dated Septem-

ber 15, 1857.—By turning worm-wheel W, the ring H will be turned around, acting upon pin P in such a manner as to produce a longitudinal motion upon tube G. The diaphragm S will be either stretched over the end of tube E, thereby increasing concentrically opening O; or said diaphragm will be allowed to relax, when the opening O will be reduced to its original size; thus the quantity of light can be regulated to be in exact proportion to the intensity of the light.

Claim.—The application of an elastic diaphragm in photographic cameras for the purpose and in the manner specified.

No. 16,689.—Joseph Longking, of the township of New Windsor, N. Y.—*Photographic Glass Holder.*—Patent dated February 24, 1857.—The holders hitherto employed to contain the glass in the camera have been made of wood, with glass corner pieces cemented to them. The chemicals soon act upon the cement, and the corner pieces fall out and become useless. This improved holder is made of a metallic composition for resisting the action of the chemicals employed. The proportions are 75 parts by weight of lead, 10 parts of tin, and 15 parts of antimony.

The inventor says: I do not claim any special arrangement of cutters; neither do I claim anything relating to photographic holders heretofore known. Neither do I claim broadly the making of metallic alloys out of lead, tin, and antimony.

Neither do I claim broadly the substitution of one material for another.

But, to the best of my knowledge, the photograph holder invented by me is a new article of manufacture, and exhibits properties and virtues which no other holder heretofore known presents.

Therefore, I *claim* a photograph holder, composed of antimony, tin, and lead, alloyed in the proportions substantially as set forth.

No. 17,231.—Robert Price, of Worcester, Mass.—*Varnish to Prepare Photographic Grounds for Wood Engravers.*—Patent dated May 5, 1857.—The surface of an ordinary engraver's block is smoothed in the customary manner to prepare it for the engraver's use. A mixture is then made of one quart asphaltum varnish, one gill ether, and one-fourth of a pound of lampblack; this mixture is rubbed into the surface of the block with a piece of buckskin or cloth, two or three thin coatings being applied, that the pores may be thoroughly filled but no varnish of any appreciable thickness is left upon the surface. A polished surface is thus obtained upon which to take the photographic picture.

The inventor says: I do not claim the use of asphaltum varnish and lampblack, or any other varnish compound, when used to produce a pellicle or covering upon surfaces designed for the reception of photographic pictures, as such varnish or pellicle unfits the block for the engraver's use.

But I *claim* the described varnish, composed of asphaltum varnish, lampblack, and ether, when the same is applied to the block by rubbing into its pores in the manner set forth.

No. 17,152.—S. DWIGHT HUMPHREY, of New York, N. Y.—*Preparation of Photographic Pictures, Engravings, &c.*—Patent dated April 28, 1857.—The nature of this invention will be understood by reference to the claim and engraving.

The inventor says: I do not claim two photographic pictures and a reflecting background, the rear photographic picture being colored, as the same was patented by J. Bishop Hall, January 20, 1857.

But I *claim*, as an improvement on the said patent of J. B. Hall, the use of a semi-transparent medium interposed between two transparent photographic pictures, or engravings, for the purpose of blending the rays of light reflected from the rear colored photograph and beautifying the picture, substantially as specified.

No. 16,438.—JOHN BISHOP HALL, of New York, N. Y.—*Improvements in Treating Photographic Pictures.*—Patent dated January 20, 1857.—This invention consists in so placing two photographic pictures which have been fixed on glass above each other, that the general lines of both pictures will exactly coincide; a variety of effects may then be produced by coloring, shading, or cutting out parts of the back picture.

Claim.—Producing in pictures to be seen by direct light a high artistic and stereoscopic effect, by combining with a white light or reflecting background, or its equivalent, two or more identical pictures of the same subject, rendered more or less transparent, and executed on or attached to plates of glass, in the manner substantially as set forth.

No. 16,738.—WILLIAM LEWIS and WILLIAM H. LEWIS, of New York, N. Y.—*Photographic Plate Holder.*—Patent dated March 3, 1857.

The inventors say: We do not claim a sliding jaw in itself; neither do we claim adapting said sliding jaw to different sizes of glasses or holders by stops or notches taking said moving jaw.

Neither do we claim retaining articles between the jaws by power derived from a spring.

Neither do we claim turning the vise or holder upon its base into any desired position, as this has before been accomplished by a screw connecting the base and vise.

But we *claim*, first. Constructing the hollow base *a* and hub *c* of the cap plate *b* in such a manner as to receive the friction spring *d*, screw *f*, and cap *e*, for regulating the power with which said plates are clamped together, substantially as and for the purpose specified.

Second. We claim regulating the force with which the spring *p* tends to clamp any glass or holder between the jaws *l* and *n*, by means of the set screw *o*, acting substantially as and for the purpose specified.

Third. We claim the bevelled adjustable bars *m*, on the jaws *l* and *n*, to support the glasses, plates, or holders, with their upper surface at the desired height above the upper edges of the said jaws, substantially as and for the purposes specified.

No. 18,780.—JOHN STOCK, of New York, N. Y.—*Photographic Plate-holder.*—Patent dated December 1, 1857.—The nature of this invention consists in the construction of a plate-holder, to which sliding pieces F F are fitted, capable of being moved in or out to accommodate any sized glass or plate; said pieces being provided with

suitable recesses h h^1 h^2 h^3 and flanches to receive and support the glass or plate.

The inventor says: I *claim*, first, a plate-holder for photographic or other purposes, with movable pieces F to support the glass or plate, constructed in the manner specified, and for the purpose of accomodating different sizes of plates.

Second. I claim the plates H and L, acted upon by springs for the purpose of keeping the pieces F F in any desired position.

No. 16,841.—JOHN W. JARBOE, of New York, N. Y.—*Photographic Plate Vise.*—Patent dated March 17, 1857.—This invention consists of a new mode of applying and securing a movable jaw, which can be adjusted to any size of plate, and tightened to the plate in an expeditious manner.

The inventor says: I do not claim the employment of a cam to bring the movable jaw up and to tighten it upon the work.

But I *claim* the combination of the screw F and its attached cam G with the movable jaw E and the sliding piece D, the said jaw and sliding piece working in separate grooves, or their equivalents, and the whole operating substantially as described.

No. 17,066.—JOHN H. MORROW, of Baltimore, Md., assignor to Himself and EDWIN BENNET, of the same place.—*Improvement in Baths for Photographic Purposes.*—Patent dated April 14, 1857.—The nature of this invention will be understood by reference to the claims and engravings.

The inventor says: Being well aware that baths for photographic purposes have been made of glass and earthenware, and disclaiming the invention of chemical immersing baths,

I *claim* the improved form of constructing a compound or double-chambered immersing bath, having an immersing chamber a a a and a dripping receptacle b b b, formed with slopes or inclined upper surfaces b^2 b^3 b^2, as described.

I also claim the suspension forked dipper device or tablet-holder g, formed with the spur or ridge i, as shown and described.

I also claim the bracket or rests e e e e, in combination with the immersing bath a a a b b b, as set forth.

No. 16,979.—DANIEL J. KELLOGG, of Rochester, N. Y.—*Improvement in Photographic Trays.*—Patent dated April 7, 1857 —The box A is provided with a well E, which contains the chemical solution to be used for coating the plate or paper on which the photographic picture is to be made. This plate or paper is inserted into the box A, as shown at F; and the bottom D is closed behind it, and fastened to the box by means of the catches K. The box is then placed in a horizontal position, and the fluid in the well will coat the surface of the plate in an equal manner.

Claim.—The employment of the movable bottom D, said bottom being constructed and applied in the manner and for the purpose substantially as described.

No. 18,901.—EZEKIEL C. HAWKINS, of Cincinnati, Ohio.—*Mode of Treating Photographic and other Pictures.*—Patent dated December 22, 1857.—The claim shows the nature of this invention.

Claim.—Giving the front surface of the glass tablet, which has an image or picture finished on its back surface, a semi-opaque and granular appearance, and consequently producing an atmospheric relief and additional painting surface, by the application of varnish, wax, or other similar substance, to the front surface of the glass tablet, as described.

No. 17,330.—EDWARD HOWELL, of Ashtabula, Ohio.—*Process for Removing Photographs from Glass to Paper.*—Patent dated May 19, 1857.—The cleaned glass plate is first covered with a thin coating of beeswax, and the picture is then taken on this waxed glass plate in the usual manner of taking ambrotype pictures. The picture, when dry, is covered with patent Japan, blackened with ivory black, and when this is sufficiently dry, a piece of blackened paper is caused to adhere to every part of the coated picture, which can then be removed, together with the picture from the glass plate.

Claim.—The mode of transferring a positive impression from glass plate to paper, or other desired substance, by means of a coating of beeswax upon the glass plate, as described.

No. 17,651.—J. W. WYKES, of Wheeling, Va.—*Background for Photographs on Glass.*—Patent dated June 23, 1857.—The picture is first made on glass, by the use of collodion or albumen, in the usual manner; the image is then blacked to the edge, or very near thereto. The blacked face of the glass is then enamelled as follows: Five parts of powdered rosin and one part of dry color are mixed together, and the face of the glass is lightly covered with the mixture; that is then applied to the other face of the glass, and the enamelling is completed. The picture is then sealed up in the usual manner, and, when encased, is placed before a reflecting background.

The inventor says: I do not claim the blacking of the glass behind the image. Neither do I claim the reflecting background, such being well known.

But I *claim* the application of the described enamel to collodion and albumen pictures on glass, substantially in the manner and for the purposes specified.

No. 17,858.—HENRY A. MARCHANT, of Philadelphia, Pa., assignor to EDWARD D. MARCHANT, of the same place.—*Improvement in Photography.*—Patent dated July 21, 1857.—A glass plate, which is placed in a horizontal position, is covered with a mixture of half a pound of clarified wax to half a pound of rectified spirits of turpentine, and about a pound of pure gum dammar., which is heated to a fluid state; the photograph or engraving is then placed on said fluid mixture, and a second glass plate is placed on the top of it. The two glass plates are then compressed to expel the air and the excess of the mixture. By this process the paper containing the design is rendered transparent, form-

ing a beautiful medium for transmission of color, which is applied to the back of the first glass plate.

Claim.—Rendering the picture transparent, and attaching the same to glass in a permanent and secure manner by means of a mixture, substantially such as described above, applied, under heat and pressure, in the manner and for the purpose above mentioned.

No. 16,832 —JAMES A. GRAY, of Albany, N. Y.—*Improvement in Piano-forte Action.*—Patent dated March 17, 1857.—The engraving and claim show the nature of this invention.

The inventor says: I do not claim the general arrangement of the action composed of the various parts, as shown, which is known as the French action, and in common use.

I *claim* the application of a spring to the hammer butt and jack-fly, causing the hammer to be so raised and kept in position that it will allow the jack-fly free play under the shoulder of the hammer butt when the key is pressed down and the action in motion, as specified.

I also claim the application of the hook to the hammer butt and jack-fly, as herein described, so as to cause them to work together with more precision, and also to bring the hammer to its place after the key has been struck and released.

No. 17,238.—HENRY STEINWAY, of New York, N. Y.—*Piano-forte Action.*—Patent dated May 5, 1857.—When the front end of the key A is struck in playing, the jack B acts upon the hammer butt *a* in the same manner as in the ordinary French action; and as the jack B escapes, the head of post *d* moves under the corner of block *c*. When the hammer C falls, it is caught by the back cheek D in the usual manner; and, by the momentum of its fall, acting upon post *d*, and through it on cushion *h*, it slightly bends down the spring *g*, and depresses cushion *h* thereof below the heel of the jack, in which condition the spring *g* is held by the action of the back cheek D on the hammer so long as the back cheek is allowed to remain in operation; but as soon as the playing end of the key A is permitted to rise in the slightest perceptible degree, or only just sufficient to liberate the hammer from the back cheek, the spring *g* gives out its elasticity and lifts the cushion *h* up again to the heel of the jack, and in so doing lifts the hammer nearer to the string X by pushing up the post *d*, thus effecting the result produced in Erard's action.

The inventor says: I disclaim everything described in the letters patent of John H. Morton.

I claim the sliding post *d* and spring *g* or *j*, or its equivalent, applied substantially as described, in relation to the jack and key to operate as set forth, in combination with a block *c* on the hammer shank, for the purpose specified.

No. 18,453.—GEORGE HOWE, of Roxbury, Massachusetts.—*Improved Piano-forte Action.*—Patent dated October 20, 1857.—The engravings and claim explain the nature of this improvement.

The inventor says: I do not claim the Erard action, made either with or without a second lever, as described, and with a double or V

spring turning on a centre pin, the fly being either hinged to the second lever or to the key.

But I *claim* the improved Erard action, having a hammer, holder, and fly arranged, applied to, and operating with the key, lever, and hammer, as described, and having the spring K applied to the holder and fly in such a manner that it shall be fixed in the former and project towards and rest on the fly projections, and without any joint or pin for the spring to turn on, whereby the spring operates free from noise, and is not liable to get out of place or order.

No. 17,320.—SPENCER B. DRIGGS, of New York, N. Y.—*Improvement in Piano-forte Action.*—Patent dated May 19, 1857.—By placing the centre of motion *a* of the key A at or near its top, the centre of motion *n* of the jack F will move nearly in a vertical line, by which means jack F is made to act more readily on the hammer H; the hammer is also by this means enabled to escape more rapidly, thereby admitting a quicker repeat.

The inventor says: I do not confine myself to either of the modes of balancing or supporting the centres of motion of the keys represented, or to any other mode of doing it.

But I *claim* balancing or placing the centres of motion of the keys at, above, or near the top thereof, instead of at the bottom or centre, for the purpose specified.

No. 17,296.—THOMAS E. POWER, of Columbia, Missouri.—*Piano-forte Bridge.*—Patent dated May 12, 1857.—The nature of this invention will be understood by reference to the claim and engravings.

The inventor says: I do not claim the bridge in the piano-forte; but I *claim* the cutting away the end of the bridge upon which the treble strings rest, and the supporting of the same by bars *b*, as described, in such manner as to permit a greater vibration in the surface of that part of the sound board which is under the treble strings in the piano-forte, to the end that the notes sounded by those strings may be more full and perfect, in the manner described.

No. 17,789.—G. HENRY HULSKAMP, of Troy, New York.—*Improvement in Piano-fortes.*—Patent dated July 14, 1857.—The improvement referred to in the fifth claim consists in interposing between the hammer and the strings a soft material, so narrow that it shall touch only one of the strings of a note, and the making of such substance to vary in hardness with the different notes of the instrument by interposing different substances, *p f b*.

Claim.—1st. The arrangement and construction of the action of piano-fortes, substantially as set forth, having the jack J under hammer *v*, and springs $n\ n^1$ attached to the key K, and moving in the same general direction with hammer butt H B.

2d. The use and application of the spring w^1, extending through the head of the under hammer, to bear against the hammer butt, for the purposes described.

3d. The regulating screw in the head of the jack, or its equivalent

in the head of the under hammer, to regulate the height of that part of the action.

4th. The shape of the hammer butt, with its spiral spring *s*, substantially as set forth.

5th. The dolce harmonic attachment, constructed as specified, or its equivalent; and I claim its parts, to wit: the interposing of a substance to touch one string only of a note, and the making of such substance to vary in hardness with the different notes of the instrument. And,

6th. The corrugated spring R, for the purposes specified.

No. 18,673.—STEPHEN P. BROOKS, of Boston, Massachusetts.—*Improvement in Piano-fortes.*—Patent dated November 24, 1857.—The nature of this invention consists: First, in combining and arranging the damper and hammer of each key of the action in one bent lever operated by a fly or lifter.

Second. In a peculiar arrangement of the fly lifter and escapement or mechanism extending between the jack and hammer.

In the engravings, A denotes the iron or metallic frame; B the sounding board; C the case or wooden frame; D D the strings; E the hammer, and F the damper; these latter two being shown as operating on two strings, or two branches of one string in the usual manner.

The inventor says: I *claim* combining or arranging the hammer and damper of each string in or on one bent lever, substantially as specified.

I also claim jointing or hinging the fly or fly lifter to the hammer lever, and arranging the escapement on the jack, substantially as described, the same dispensing with hinging the fly to the jack, and enabling the fly and lifter to be made or united in one rigid bar or piece.

I also claim the above described arrangement of the back catch, namely, on the jack and in rear of the escapement.

No. 18,810.—H. GOLDSMITH, of Philadelphia, Pennsylvania.—*Improvement in Piano-fortes.*—Patent dated December 8, 1857.—The engravings and claim explain the nature of this invention.

The inventor says: I *claim* the additional or supplemental sounding board H, the same being constructed, applied, and operating substantially in the manner and for the purpose set forth and described.

I also claim, in combination with the said additional or supplemental sounding board, the contracting of the bridge *b*, so as to allow of the treble and tenor strings being all brought more nearly together upon the same, as and for the purpose set forth and described, whilst they are at the same time permitted to retain the usual distances apart on the pin block, as described.

No. 17,838.—G. HENRY HULSKAMP, of Troy, New York.—*Metallic Bridge for Piano-fortes.*—Patent dated July 21, 1857.—The rod *k*, which is inserted within a groove of the bridge *i*, is made of zinc, ivory, wood, or brass, and serves to reduce the friction of the strings

upon the lower side of the cast iron bridge, when said strings are extended in process of tuning the instrument.

Claim.—1st. The sounding board bridge *p*, cast of metal, with two bearings *t* above the string, one on each side of the bottom support, substantially as and for the purposes specified.

2d. The rod or wire *k*, or its equivalent, inserted in the bridge *i*, to form its bearing surface, for the uses and purposes set forth.

3d. The construction and arrangement of the cast metal bridge *i i*, in such form that it may be detached and yet firmly held in its place in the mode set forth, or other form substantially the same.

No. 16,990.—JOSEPH NEWMAN, of Baltimore, Maryland.—*Improvement in Sound Boards of Piano-fortes.*—Patent dated April 7, 1857.—The bridge H of the lower sounding board G is raised sufficiently high to overreach the bridge D of the upper sounding board E, so that the strings I of bridge H may pass over and clear the strings J of bridge D.

Claim.—In piano-fortes and other musical instruments having two or more sounding boards, making the bridges upon the lower sounding board or boards to protrude through or rise beyond the sounding board or boards above them, substantially as described for the purposes set forth.

No. 17,148.—DANIEL F. HAASZ, of Philadelphia, Pennsylvania.—*Improved Action for Grand Pianos.*—Patent dated April 28, 1857.—This invention relates to improvements in the action of grand pianos, for which a patent was granted to the inventor on the 4th March, 1856, and consists in so constructing and arranging the action that the hammer strip described in the specification of said patent may be entirely dispensed with, thereby affording an opportunity of removing each key K separately from its position on the key frame E when the latter is removed from the piano.

The inventor says: I do not claim that portion of the described parts which bears directly on the immediate action of the check J on the hammer, as that portion is similar to the French action, known as Erard's.

But I *claim*, first, attaching the supporter L to the key, and the lever M and spring S to the supporter, in the manner and for the purpose set forth.

Second. The arrester P with the lever Q, as connected to the key in combination with the adjustable wire R, as attached to the key frame, the whole being arranged and constructed substantially as set forth and for the purpose specified.

No. 17,812.—Dr. GUSTAV SCHILLING, of Hoboken, New York.—*Improvement in Wrest-pins for Pianos.*—Patent dated July 14, 1857.—By turning the screw nut *h*, the tension of the strings is increased or diminished, and thus in tuning the instrument it is only necessary to operate said screw nut.

Claim.—Combining the heads of wrest-pins with an adjustable screw, to which the string is attached, in such manner that the direc-

tion of the straining force is mathematically true in the direction of the axis of the adjustable screw, by means substantially as described and set forth.

No. 18,239.—AUGUSTUS ELIAERS, of Boston, Mass.—*Improvement in Portfolio or Music Stands.*—Patent dated September 22, 1857.—The nature of this improvement is fully described in the claim and drawings.

The inventor says: I *claim* arranging the braces or sliding frames which are hinged to and support the adjustable leaves of a portfolio stand in such a way that they shall, in sliding, always keep in nearly a vertical position for the better supporting the leaves and the weight upon them, by having the traversing and bolting rods move in curved grooves directly beneath them in the sides of the stand, instead of having the bolting rods of each brace or frame slide in grooves on the other or opposite side of the centre of said stand; in combination with the locking devices above described, for the purpose of rigidly locking and supporting the leaves, and whereby the whole stand can be lifted by the leaves in removing it from place to place.

No. 17,311.—ROBERT ARTHUR, of Philadelphia, Pa.—*Improvement in Portfolios.*—Patent dated May 19, 1857.—The nature of this invention will be understood by reference to the claim and engravings.

The inventor says: I am aware that a letter file is made of a broad band of India rubber, which is used to keep together, by means of its elasticity, a bundle of folded letters.

I am also aware that a file has been made by confining together two stiff boards, by means of an elastic cord or band passing entirely around them, or fastened to one board, the papers being put in at one end by drawing the boards apart.

I am also aware that an elastic clasp for pocket books, and probably other articles, has been made; these I disclaim.

I *claim*, first, a portfolio made with an elastic back or hinge, combined with an elastic fastening.

Second. Making the hinge and fastening adjustable, for the purpose specified.

No. 18,994.—HENRY T. SISSON, of Providence, R. I.—*Improvement in Portfolios.*—Patent dated December 29, 1857.—The claim and engravings explain the nature of this invention.

Claim.—The cords *d* passing through the strips or plates *a a*, and attached at one end to the slides B, fitted or placed within the guides C, or any equivalent device for tightening the same; and the opposite ends attached to needles *e*, which pass through perforations in one of the strips *a*, as shown and described for the purpose set forth.

No. 17,057.—DANIEL C. SMITH, of Tecumseh, Mich.—*Lock and Clasp for Portmonnaies.*—Patent dated April 14, 1857.—In locking this portmonnaie, the clasp B is turned into the position in figure 1, the pin *q* of said clasp falling into a corresponding recess of spring C,

while the finger A has locked a ribbon, to which the portmonnaie is then secured.

Claim.—The combination of the several parts of the lock and clasp of a portmonnaie, as described, for the purposes specified.

No. 17,753.—SAMUEL J. SMITH and CHARLES LOCKLE, of New York, N. Y.—*Embossing and Printing Press.*—Patent dated July 7, 1857.—The inking roller *g* receives the ink from bed *i*; and the die e^1 is inked by raising lever *h* to the position represented in dotted lines, and by then passing it over the surface of die *e*.

The inventors say: We do not claim a raised metallic counter die for embossing; neither do we claim gutta percha or other elastic substances for the counter die, because this is well known in various kinds of printing presses. But we are not aware that the metallic counter die, which is necesary for embossing with a hand lever press, has ever before been covered with a thin coating of gutta percha, to cause a perfect impression of the ink from the die simultaneously with the embossing from the metallic counter die.

We *claim* the arrangement of the inking table *i*, die *e*, spring *k*, roller *g*, and its lever *h*, substantially as and for the purposes specified. We claim the raised metallic counter die for embossing, when covered with a thin coating of gutta percha, to enable said metallic counter die to give a perfect impression of ink from the embossing die on those parts of the paper that are not raised by the embossing die simultaneously with said embossing, substantially as specified.

No. 16,718.—NATHANIEL L. CHAMBERLIN, of West Roxbury, Mass.—*Hand Printing Press.*—Patent dated March 3, 1857.—The upright I is pivoted to the projection K of frame at *d*. The pin *e* passes through I and K. The pin is cut away on one side, (see figure 3,) forming an eccentric, by turning which the upright I may be slightly adjusted.

Claim.—First. The method described of hanging and balancing the impression roll, for the purpose set forth.

Second. The method, substantially as set forth, of adjusting the impression roll to increase or diminish the pressure given, and adapt it to the size of the form and the height of the type or block.

No. 17,307.—WM. MORRIS SMITH, of Washington, D. C., assignor to Himself and PETER HANNAY, of same place.—*Improvement in Copying Presses.*—Patent dated May 12, 1857.—The book containing the writing to be copied being placed on bed plate A, lever G is raised; which movement brings down platen D, which thus exerts the necessary pressure on the book. The platen D and bed plate A can be adjusted so as to take a book of greater or less thickness, by operating screw nut L, which, by means of the tapering clamp K, causes the wrists *n* to increase or decrease the distance from each other.

Claim.—First. The levers G, in combination with the links C and F, arranged and operating in the manner substantially as set forth.

Secondly. The method of adjusting the platen and bed plate so as take a book of greater or less thickness, substantially as described.

Thirdly. The slotted upright M on the bed plate, in combination

with the arms S of the platen, for the purpose of preventing lateral motion, as set forth.

No. 16,500.—WILLIAM T. TILLINGHAST, of Dayton, Ohio.—*Composing Stick for Printers.*—Patent dated July 27, 1857.—By a pressure upon the thumb piece C, the pin D is thrown out from one of the holes in the back plate of the stick A, thus allowing the slide B to be adjusted by means of the scale R K.

Claim.—The combination of the aforesaid several devices and their application in forming the composing stick.

No. 17,007.—DANIEL WINDER, of Cincinnati, Ohio.—*Improvement in Printers' Composing Sticks.*—Patent dated April 7, 1857.—The spring plate B can be moved, adjusted, and held by the thumb screw *d*, so that its end R can be adjusted to any distance from end S of the stock *a*, to suit any size of form that may be required to set up.

Claim.—The combination and arrangement of the several parts of the composing stick, as constructed, with each other, all as and for purposes specified and represented.

No. 17,457.—JAMES TIDGEWELL and WILLIAM TIDGEWELL, of Middletown, Conn.—*Improvement in Printers' Composing Sticks.*—Patent dated June 2, 1857.—The nature of this invention will be understood by reference to the claim and engravings.

The inventors say: We do not claim making a composing stick adjustable to different widths; nor do we claim making it with a solid foot or bottom stile without apertures for the insertion of the fastening screw.

But we *claim* the application to the slide of a composing stick of the flange C and the screw E, in combination with the washer F, interposed between the point of the screw and the exterior surface of the foot or bottom stile of the stick, as described, and for the purposes set forth.

No. 18,668.—JOHN M. BATCHELDER, of Cambridge, Mass., and LUTHER L. SMITH, of New York, N. Y.—*Improvement in the Preparation of Engraved Metal Plates for Printing.*—Patent dated November 24, 1857.—The nature of this invention is explained by the claim of the inventors.

The inventors say: We are aware that electrotype plates are formed by the deposit of copper in a matrix, and a back of softer metal afterwards applied to them; also, that movable types in relief have been coated with copper; also, that alto-plates (the reverse of engraved plates) have been coated with silver to prevent oxydation; we therefore make no claim to these processes or their products.

But we *claim* an engraved plate, composed of two metals, one of which is iridium, and forms the face or impression surface of the plate; the other metal forming the back of the plate being copper or any metal that can be engraved with the common tools used by engravers; while the printing surface produced as herein described is very hard, and will give a greater number of impressions than the engraved plates now in use.

No. 17,239.—RICHARD FORD STURGES, of Birmingham, England.—*Mode of Constructing Rollers or Cylinders for Printing Fabrics.*—Patent dated May 5, 1857.—The cylinder *a* of sheet copper being trimmed inside and closed at its bottom, a mandrel *c* is inserted and retained therein in a central position; fuzed zinc is then poured into the space *d*, and the upper end of the cylinder is closed by means of a ring *e*, which is also turned on its lower side. When the fuzed zinc is cooled, the mandrel *c* is withdrawn, and the cylinder is ready for the finishing operation.

The inventor says: I do not limit myself to the precise details herein described and represented, as the same may be varied without departing from the nature of the invention.

I *claim* the new manufacture of rollers or cylinders for printing fabrics described—that is to say, casting a thick tube of a hard and easily fusible metal or alloy in the interior of a tube of copper or alloy of copper.

No. 16,952.—LINUS STEWART and JOHN MCCLELLAND, of Washington, D. C., assignors to DAVID MCCLELLAND and JOHN MCCLELLAND, of the same place —*Machine for Printing from Engraved Plates.*—Patent dated March 31, 1857.—The bed-plate F, which carries the copper plate, is hollow, and is provided with a pipe which passes through its entire length. This pipe is closed at one end, and is fitted steam-tight around the stationary steam-pipe K, the steam passing through pipe K, and thence into the hollow bed-plate to heat the same. The next feature of this invention relates to the cleaning apparatus, which consists of two rollers c^1 *c*, which have their bearings in a frame *d*, which latter is secured to the vertical shaft V, which is rotated by any means from the main driving shaft. As shaft V is rotated, the rollers *c* and c^1 rotate in a plane parallel to the copper plate and around the shaft V; a cloth passes around both rollers, which cleans the copper plate, and at each revolution of shaft V the arm *e* strikes against a projection on the frame of the machine, which moves it and the pawl attached to it, the latter turning the ratchet wheel *h* during the length of one tooth, which movement brings at each revolution a fresh part of the cloth in contact with the copper plate.

The third feature of this invention relates to the device for holding the paper to the printing roller *i*. A groove *p* is cut longitudinally through the roller *i*, through which passes a shaft *q*, supported in the head *r*. The nippers *s* on this shaft serve to catch and hold the paper to the roller *i* and the cam *t*, which is controlled to a certain extent by spring *u*, which bears against each of the depressions 7 and 8; and when the nippers are open or closed upon the paper, the cam and spring hold them in their positions.

Claim.—Heating the plate from which the impression is to be taken, by means of a hollow bed-plate, into which steam is admitted, substantially as described.

Also, the cleaning of the plate by means of a horizontally revolving cleaning apparatus, in which a clean surface is constantly brought into contact with the plate at every revolution of the cleaner, substantially as described.

Also, in combination with the fingers or nippers, the cam and spring, which alike hold them, whether open or closed, substantially as described.

No. 17,319.—WILLIAM CROOME, of Brooklyn, N. Y.—*Method of Printing in Colors.*—Patent dated May 19, 1857.—The different colors contained in the boxes *a*, *b*, *c*, are spread upon the stationary tablets a^1, b^1, c^1, and transferred to the movable tablets *p*, p^1, p^2, by means of the distributing roller *e*, which, in their turn, deliver it to a second roller *x*; the tablets *p*, p^1, p^2, can be moved to and fro over the table, and the rollers are guided in their course by their flanges running in grooves *o*. The several colors are thus kept separated, and may, in a similar manner, be transferred to the article to be printed.

Claim.—The movable tablets for the separate colors, in combination with the guided roller, or equivalent surface, for taking up the inks, operating substantially as described.

Also, in combination with the printing surface and with the inking surface, the corresponding guides for insuring the uniform action of the inking surface upon the printing surface, as set forth.

No. 17,688.—GEORGE MATTHEWS, of Montreal, Canada East.—*Improvement in Printing Ink.*—Patent dated June 30, 1857.—The calcined green oxyde of chromium is mixed with burned or boiled linseed oil in the manner usual in preparing ink for printing purposes.

Claim.—The use of the calcined green oxyde of chromium for making ink for printing from engraved plates, from types, or for other kinds of printing, as described.

No. 18,504.—SAMUEL W. FRANCIS, of New York, N. Y.—*Printing Machine.*—Patent dated October 27, 1857.—The principal feature in this improvement consists in arranging a row of hammers in a circle, so that when put in motion they will strike the same place, which is the centre of said circle. The paper is moved along by means of a spring and catch, so connected with the keys that it shall move the paper the distance of one letter whenever a key is struck. On the face of each hammer a letter is cut in relief, in such a position that its impression on the paper will be parallel with those of the others. At the end of each line, the "car" which carries the paper is drawn back by the hand. By this operation the spring is wound up for the next line, and the paper is moved a distance of two lines in a direction perpendicular to the line written, by means of a catch. The keys are connected with actions somewhat similar to those used in pianos, by means of wipes and bell-cranks, which actuate the hammers.

The inventor says: I *claim*, in combination with a series of keys, a series of stop-bolts P Q P^1 Q^1, constructed and arranged in the manner specified, whereby the simultaneous action of two or more keys, and consequently of two or more hammers, is effectually obviated.

I also claim connecting with the type-hammer *x* a secondary hammer or counter-weight *h*, by means of a spring and rod *c*, substantially in the manner described, for the purpose of actuating with greater

ease, and of maintaining the equilibrium of the type-hammer in its various positions.

I also claim the combination of spring power mechanism with the "paper car," when the former is made to propel said car in a direction contrary to the lines to be printed, and when the car is guided in its course by rails, substantially as described.

I also claim the specific device described for holding the paper flush with the inking band, consisting of the roller *i* connected to the heavy rule J by a system of parallel link-frames, and holding the paper with gentle pressure upon and against the roller h^1, substantially as set forth.

In combination with the roller *i*, I claim the spider-wheel, when arranged in relation and operating in connexion with the lever and spring, so as to feed the paper in a direction perpendicular to that of the printed line.

I also claim the combination of the movable frame with catch, spike wheel, and barrel, when so constructed and arranged as described, whereby the car is made to move by the action of keys during the intervals of printing, substantially as set forth.

No. 18,795.—JAMES S. MOODY, of Cincinnati, Ohio, assignor to T. F. and J. F. RANDOLPH, of Cincinnati, Ohio.—*Card Printing Machine.*—Patent dated December 1, 1857.—The engravings and claim explain the nature of this invention.

Claim.—The arrangement of the arm *c*, when provided with the form *d*, distributing plate *f*, rods *y y*, feed plate S, duct *i*, guide plate 12, spring J, and lever *h*, and these arranged with the levers R R and spring K, when said levers are furnished with ink rolls *m m* and distributing rolls *o*, and the whole arranged with the vertical oblong openings in the lower part of the frame B B, in which the shaft 10 works, to admit of the arm *c* being raised vertically to make an impression, by pressing down the end of the lever *h* on the fulcrum 13, and thus elevating the arm *c*, as before stated; the whole thus combined, arranged, constructed, and operated as represented, in the manner and for the purposes of feeding blank cards to the machine, inking the form, making the impression, and discharging the card from the machine after being printed, as specified and represented in the accompanying drawings.

No. 17,322.—JOHN FALLON, of Lawrence, Mass.—*Improved Blanket for Calico Printing Machines.*—Patent dated May 19, 1857.—A represents the impression cylinder, C the engraved cylinders; the India rubber apron D passes around cylinder A, and is sustained by rollers E F; over this apron pass the three thicknesses of grays, which are arranged as follows: From the roll G the unbleached cotton H passes over suitable carrying rolls to the cylinder A, beneath which it passes in contact with the India rubber apron; thence, as indicated by letter I, over rolls *a b c d e f x y*, back to cylinder A, beneath which it runs directly outside the first fold H; thence it passes, as indicated by letter K, over the rolls *a g h i k l m x y*, again beneath the impression cylinder; thence over the rollers *a n o p* to the roll L, upon

which it is wound, the material not being again returned through the machine. The bleached cotton Q to be printed enters the machine from roll S, passing round the cylinder A, beneath the several folds of grays and the India rubber blanket, and in contact with the engraved cylinders C; thence the printed fabric passes off over the rolls *a n o t* out of the machine.

Claim.—The combination of the short India rubber blanket with the multiple fold of "grays" passing once through the machine, and operating in the manner substantially as set forth.

No. 17,308.—ELISHA LEE, of Baltimore, Md.—*Method of Preparing Canvas for Printing, Painting, &c.*—Patent dated May 12, 1857.—One pound of rice is boiled in sufficient water to prevent its burning, and while boiling there is added to it half a drachm of pulverized borax, also one-fourth of an ounce of gelatine, isinglass, or best white glue. To this rice paste are then added equal quantities in bulk of white lead, best Paris white, and white pipe clay; which are all mixed with linseed oil and ground, forming a thick composition, which, when spread evenly on any required surface and sufficiently dry will form an absorbent ground, insoluble in boiling water, and capable of receiving impressions.

Claim.—The composition of the described ingredients to produce an oil ground possessing the qualities mentioned, without sizing the canvas.

No. 18,056.—PAUL PRETSCH, of the Empire of Austria.—*Photogalvanographic Process for Printing.*—Patent dated August 25, 1857.—The solutions of nitrate of silver and iodide of potassium are mixed with a solution of clear glue in water. These are poured on to a suitable plate so as to form a coating thereon when dry. The photograhic impression is made on this coating in the usual manner; and when the original is removed from the coating, the photographic picture will be found to appear in relief, and, when sufficiently developed, must be washed with spirits of wine. The surplus moisture is then removed, and the plate is covered with a mixture of copal varnish diluted with oil of turpentine; before becoming dry, the superfluous varnish must be removed with oil of turpentine, and the plate immersed in a weak solution of tannin, from which the plate must be removed as soon as the design is sufficiently raised. The plate is then ready to be copied by means of the well-known process of electrotyping.

Claim.—The peculiar adaptation of the photographic process to the production of metallic and other surfaces suitable for printing, and for various other useful and ornamental purposes, as described, or substantially similar thereto.

No. 18,477.—JOHN H. UTTER, of New York, N. Y.—*Printing Press.*—Patent dated October 20, 1857.—The engraving and claim explain the nature of this improved press.

The inventor says: I do not claim broadly actuating the platen by means of the impression levers, as that has been previously

done; neither do I claim giving an impression by means of the leverage described.

But I *claim*, first, the combination of the swinging platen E, levers *g h i*, and shaft *f*, when arranged as set forth.

Second. I claim connecting the inking rollers to the swinging platen by means of rods *p*, or their equivalent, in such a manner that the movement of the platen around its centre of motion shall cause the inking rollers to pass across the type, when arranged and operating substantially in the manner described.

Third. I claim giving the frisket a motion in an opposite direction to that of the platen during a portion of its movement, by the means and for the purpose specified.

No. 18,744.—JOHN HENRY, of Vevey, Ind.—*Printing Press.*—Patent dated December 1, 1857.—This improvement in printing presses is calculated to expedite the mode of working hand presses. The engravings and claim will give an idea of the invention.

Claim.—The inventor says: 1st. The frisket carriage M attached to the frame D, as shown and used in connexion with the inclined bars or guides *j j*, whereby said frisket carriage and its frisket is elevated at the termination of the outward stroke of the frame, so that a blank sheet may be readily and conveniently adjusted on the frisket, or a printed sheet be discharged therefrom, as described.

2d. The frisket N, when used for the purpose of discharging or delivering a printed sheet, as set forth.

3d. The combination of the pressure cylinder J and frame D, when said cylinder is operated automatically by the wedges L L and spring Q, as shown, so as to be depressed at the proper time, and give the necessary impression to the sheet, and also be thrown up free from the sheet after the impression has been given, as described.

4th. The arrangement of the feed board B and fly board C, when arranged as shown, so that said boards are made adjustable and capable of being removed at one side, so as to render the working parts of the press accessible, as described.

No. 18,812.—CHARLES W. HAWKES, of Boston, Mass.—*Printing Press.*—Patent dated December 8, 1857.—The claim and engravings explain the nature of this invention.

The inventor says: I *claim*, first, the cam lever C^1, operated by a vibrating platen, substantially in the manner and for the purpose set forth.

Second. I claim securing carriage ways to the adjustable bed, so that when the bed is moved by altering the impression, the roller carriage will move with it, and keep the rollers always in a proper position to roll the form evenly, in combination with the roller carriage, substantially as described and set forth.

Third. I claim the nipper lever, operating in the manner and for the purpose set forth.

Fourth. I claim the trip in combination with the nipper lever, substantially in the manner and for the purpose specified.

Fifth. I claim the combination and arrangement of mechanism

specified, for receiving the cards to be printed, and delivering them after they are printed, substantially as described.

No. 17,499.—CHARLES E. EMERY, of Canandaigua, N. Y.—*Card Printing Press.*—Patent dated June 9, 1857.—The operator having placed ink on the rollers J and K, and a form F on the bed B, and having adjusted the gripers *k*, grasps lever H with one hand, and pushes it back; this throws the rollers *v* over the form F, and inks it, and throws the plate *r* out, and the griper *k* away from the platen A into the position represented in fig. 3. He now places a card on the platen A behind the gripers *k*, and pulls lever H forward; the gripers catch the card, and hold it against the platen, while the rollers *v* move back to the distributing roller J; by the time that lever H has arrived at its extreme of motion, the card is pressed upon form F, and the plate *r* is pushed up inside the partition. By now pushing back lever H, the rollers will ink the form, and the gripers release the card, which drops down on a table.

The inventor says: I do not claim the principle or manner described of applying the power.

But I *claim*, first, the general construction of the machine, and the arrangement and combination of its parts, said parts being arranged, combined, and operated in a manner equivalent to that described, so as to accomplish the object of the invention; the operation of each part being adapted to the vibratory movement by which the machine is operated, and the pressure, feeding, and discharging contrivances of the machine being combined with the inking arrangement described, or with one equivalent to it.

Second. The manner of adjusting and operating the gripers *k k*, which hold the card, in combination with the manner of operating and stopping the operation of the plate *r* upon which the card is laid, both being operated by the simple vibratory movement of the moving surface, which gives the impression.

No. 17,036.—MAX C. GRITZNER, of Washington, D. C., assignor to M. J. GRITZNER, of Washington, aforesaid.—*Engraved Plate Printing Press.*—Patent dated April 14, 1857.—The engraved plate *a*, as it issues from between the printing cylinders *d* and *e*, is first inked by means of inking apparatus *h f g*, and then wiped by means of two wiping rollers *k l*. These two wiping rollers have a peculiar compound motion, closely imitating the motion of the hand in wiping plates by hand. This compound motion is produced by causing the rollers to revolve around their own axis, and, at the same time, to vibrate laterally across the plate. The rollers are of India rubber, the roller *k* being covered with oil silk, which has been found to answer the purpose of wiping admirably. The surface of the oil cloth, as it takes the ink up from the plate *a*, passing underneath and in contact with the roller, is constantly kept clean by means of a dull edged scraper *o*. The inventor states that one and the same piece of oil cloth will answer for a whole day's printing. The second roller *l* is covered with a piece of muslin *z*, which is kept impregnated with chalk dust. The chalk dust is contained in the box *m*, and drops

through the sieve *n* upon the surface of the roller. The elastic India rubber scraper *q* takes off the superfluous chalk. This second roller serves to polish the plate. As soon as the plate has passed through the rollers, the rollers *k l* and the inking apparatus are raised by means of lever *w* operating inclined slides *v*, upon which the axles *s* rest, which support the frames of the rollers and inking apparatus. The plate now travels back towards the printing cylinders for the purpose of having the impression taken. The paper is fed to and carried off the plate by means of the automaton paper-feeding bands C D. In printing very fine work, the inventor removes the second roller *l*, and uses only the roller *k*, that takes all the ink off the plate; the printer, as the plate issues from underneath the roller, polishes the plate by hand in the usual way. By this means from five to six impressions may be taken when one is taken by the usual process of hand-wiping. The press can be worked by steam power.

The engraved plate *a* is fastened to the reciprocating bed plate *r* by means of pivots *b c* soldered to the back of the plate.

The improvements are such that they can be attached to one of the usual copper-plate printing presses.

Claim.—Covering the wiping rollers, or their equivalents, with oil cloth or oil silk, or any other material impervious to ink, for the purpose of having a wiping surface from which ink can be constantly removed by a scraper or otherwise, so as to keep it clean, in contradistinction to cloth, leather, or similar materials, which absorb ink.

Also, in combination with a reciprocating bed plate, carrying an engraved plate or its equivalent to be printed from, one, two, or more wiping rollers, revolving each upon its own axis, when the said axis has a reciprocating, rotating, or any other motion, in a plane parallel with the plane of the bed plate.

Also, passing a wiping band over two or more wiping rollers, when said rollers have the compound motion given to them in the manner described.

Also, producing the proper degree of pressure between the cleaning surface and the plate, by means of a compressed gaseous or liquid fluid.

Also, the manner specified of securing the plate to be printed from to the bed plate.

No. 16,861.—Francis S. Coburn, of Ipswich, Massachusetts, assignor to William W. Messer, of Boston, Massachusetts, and George F. Gray, of Albany, New York.—*Hand Printing Press.*—Patent dated March 17, 1857.—The object of this invention is to arrest the inking roller after the type has been inked by it, and during the further vertical movement of the type, by a contrivance or means separate from the type block, so that the roller may not roll against either vertical edge of the type block, and ink the same. As the roller leaves the rear edge of the printing surface, it comes underneath and against a rest or projection M, arranged and extended from the frame, as shown in the engraving, and serving to stop the roller and prevent it from being thrown upward and directly over the printing block by its

spring during the further descent of the printing block towards the bed.

The inventor says: I do not claim combining the inking roller arm F and its spring I with a lever K applied to the frame A and the vertical shaft *c*, and operated by the latter, substantially as described.

But I *claim* the application or arrangement of the stops M and *b* and the spring I, with respect to the frame A and the lever K, and so as to arrest the upward movement of the roller, under circumstances as stated.

No. 18,557.—SAMUEL J. SMITH, of New York, N. Y.—*Hand Printing Press.*—Patent dated November 3, 1857.—In this invention the roller *h* is set on a lever arm *l*, attached by the screw 7 to the bed *a*, and said arm and roller is drawn back by the spring *m* from the projecting end of an arm *n*. 8 is a screw in the bed *a*, into which the lever arm *l* is drawn by the spring *m*, when the parts assume the position shown in fig. 2; and, by means of this screw, the position of the roller *h* is so adjusted that the printing surface, as it is moved with the lever, takes at its edge on to the roller so as properly to ink the surface, and not supply too much or too little ink to the edge.

The inventor says: I do not claim any one of the parts separately.

But I *claim* the manner described of adjusting the lever *l* and its inking roller *h* by the screw 8, so that the inking takes correctly on to the edge of the printing surface 2, as said surface moves in a curved line with and on the lever *d*, as and for the purposes specified.

I also *claim* arranging the printing surface 2 and inking table *g* on the lever *d* in such a manner, relatively with the inking roller *h* and its lever *l*, that said roller shall travel over the printing surface as the lever descends, and then pass up on to the inking table *g* for distributing the ink while the impression is being given, at the same time that the paper or other material being printed is kept from contact with the roller by the foot 5, substantially as and for the purposes specified.

No. 18,907.—J. M. JONES, of Palmyra, N. Y.—*Hand Printing Press.*—Patent dated December 22, 1857.—The nature of this invention consists in an arrangement by which the "form" bed J is elevated a sufficient height to admit the ink roller to pass under and against the face of the type, and then readily brought down to the paper and a powerful impression given. Also, in hanging the ink roller by a rod and shaft, the shaft being under the platen in such a manner that, in depressing the form, the ink roller is carried forward and against the face of the type. Also, in an improved method of suspending the form.

Claim.—First. The arrangement of the various parts so that the lever K can be operated at right angles to the curved bar B and inking bar D, suspended on the shaft H, in the manner and for the purposes set forth.

Secondly. Suspending the bed J on the lever bar B, in the manner and for the purposes set forth.

No. 16,826.—JOHN C. DAVIS and WILLIAM MILLER, of Elizabeth, New Jersey.—*Rotary Printing Press.*—Patent dated March 17, 1857.

The inventor says: We do not claim the separate parts of the machine as new.

But we *claim* the combination of the rollers *g g* with the shoes 1 2, and the inclination of the ways or planes *d d* and the upright screws *h* for operating the type bed, substantially as described.

No. 16,837.—HORACE HOLT, of Winchester, Mass.—*Improvement in Printing Presses.*—Patent dated March 17, 1857.—These improvements consist in a peculiar arrangement of parts whereby the "form" is properly inked, the "platen" drawn underneath the form, and the form pressed down upon the card on the platen, and the platen, after the card has received its impression, is forced out from underneath the form; these movements being made by the operation of a single cam. The engravings and claim further explain this invention.

The inventor says: I *claim* operating the "platen" G by means of the cam C, slide D, and arm E, connected with the platen by the rod F; and also operating the plate J, to which the form I is attached by means of the rod *e*, connected with said plate, and made to bear against the face of the cam; when said parts are arranged as shown, or in any equivalent way, so that the platen G and form I may be operated conjointly by the cam C, as described, for the purpose set forth.

I also claim, in combination with the means above named for operating the platen G, the rotating and vibrating ink-distributing roller M, when operated as shown and described.

I further claim throwing the printed cards from the platen G by means of the levers N O, attached respectively to the platen G and plate J, arranged as shown and described, or in an equivalent way.

No. 17,405.—S. D. LEARNED, of Boston, Mass., assignor to A. C. LEARNED, of New York, N. Y.—*Improvement in Printing Presses.*—Patent dated May 26, 1857.—The type or form G is secured upon the bed F, and the frame B is moved back and forth by hand. When the frame B is in the position shown in the engraving, the ink roller C is on the form, and inks the same as it is shoved over it. When the frame B is brought back, the tympan H is thrown down, together with the sheet of paper a^1, secured to the tympan by frisket I. The roller D, in passing over the tympan, gives the requisite pressure to the sheet, so that it receives the impression thereof. When the frame is shoved back, the cross-piece c^1 strikes the rods *n*, and throws up the tympan, as shown in full lines on the engraving.

The inventor says: I do not claim separately any of the parts described, for they have all been used in presses under various forms of arrangement with other parts.

But I *claim* the reciprocating frame B, provided with the inking and presser rollers C D, in combination with the ink and form beds E F and tympan H, provided with the rods *h n* and frisket I; the above parts being arranged to operate conjointly, as shown, for the purpose set forth.

No. 17,418.—JASON L. BURDICK, of New York, N. Y.—*Improvement in Printing Presses.*—Patent dated June 2, 1857.—Motion being imparted to crank-shaft S, the connecting rods C impart a reciprocating motion to the cylinder A, which is made to slide in ways Q at the same time that a reciprocating rotary motion is imparted to said cylinder by pinion P passing over rack H. The inking roller J delivers the ink to cylinder A, and distributing roller R inks the types which are set on the face of cylinder A; when the cylinder A has arrived at the end of its way, the tooth *m* of pinion P comes in contact with the guide-piece G, which guides the roller A in such a manner that the face of platen T will be parallel with the type-bed *p*, in which position the impression is made on the paper on platen T.

Claim.—First. The arrangement of working the roller A upon which the type is attached, in such a manner as to communicate to the same a forward and backward motion, in connexion with a rotating motion, substantially as described.

Second. The arrangement of a guide piece, for the purpose of guiding the type roller in the latter part of its forward motion, so as to bring the types always square against the platen T containing the paper or card to be printed.

No. 17,463.—DANIEL K. WINDER, of Cincinnati, Ohio.—*Improvement in Printing Presses.*—Patent dated June 2, 1857.—By turning crank *l* shaft *a* is rotated, and the piston *g*, and platen *h* have a reciprocating movement imparted to them by means of a crank on shaft *e;* and the cards are placed and the type form *c* printed by the operation of these parts. The inking roller *g* receives the ink from the curved flange *d;* and as it has to pass over said flange in a vertical position, the tripping of said roller is performed in the following manner: At a certain point in each circuit of the roller, the lower end of the stirrup *n* engages with hook *v* pivoted in a slot of the bed *a;* and its advance being opposed thereby, the hook ascends, as represented in fig. 2, turning the stirrup *n* on its fulcrum A, which is at the end of arm *m* and the sliding button *t*. Fig. 4 is drawn around the edge of arm *m*, and is then retracted against the other side of said arm by the action of springs *u*.

Claim.—The construction and arrangement, substantially as set forth, of the roller bearing (*n o r s*) pivoted to the flattened branch or arm *m* from the driving shaft, and provided with the sliding spring button *t*, in combination with the hook *v*, or equivalent devices, for the tripping and inversion of the inking roller between the consecutive inkings, as explained.

No. 17,615.—FRANKLIN L. BAILEY, of Boston, Mass.—*Improvement in Printing Presses.*—Patent dated June 23, 1857.—The paper to be printed, after having been laid on the tablet E, is seized and drawn off the same by the action of the nipper *v* and carrier D^1, and is borne down in place on the carrier D^1 by the springs *t*, which co-operate with the nipper. The carrier D^1 takes the paper from the tablet and up to the type form C, where, after having been printed, it is freed from the type by the gripe of the springs *t* against the carrier D^1; and it is then

guided and supported downward by the movement of said carrier, so as to come back to the tablet, when it will be discharged by its gravity.

The inventor says: I *claim* the combination and arrangement of the nipper and holding springs applied to the sheet carrier and made to operate therewith, substantially as described, and whether said springs be made stationary or adjustable laterally on their shaft.

I do not claim a sliding platen or plate moving out from beneath the type form for the purpose of receiving a sheet to be printed.

But I claim the sliding carrier or plate D^1 when made to move in an inclined or vertical direction, for the purpose set forth.

I also claim the combination of the sheet carrier or plate D^1 with ways placed on the platen or vibrating frame D, on which it slides, so that it may assume the positions for receiving the sheet to be printed, and also for giving the impression to the same.

No. 18,567.—MERWIN DAVIS, of New York, N. Y., assignor to PETER G. BERGEN, of Brooklyn, N. Y.—*Improvement in Printing Presses.*—Patent dated November 3, 1857.—The claim and engravings show the nature of this invention.

The inventor says: I do not claim, separately or in itself considered, the reciprocating carriage O, provided with fingers or nippers for feeding the blank sheets to the form; nor do I claim the "fly" separately, or independent of its arrangement and connexion with the parts, as shown.

But I *claim*, first, the reciprocating rolling pressure segment J, provided with a weight box *h*, or any suitable or equivalent device, by which the counterpoise of the segment may be varied or graduated to be commensurate with the speed of the segment. I also claim the reciprocating roller pressure segment, when arranged to operate as shown, irrespective of the variable counterpoise.

Second. I claim the reciprocating carriage O, provided with the fingers or nippers *w*, in combination with the segment J, for feeding the sheets to the form. I also claim, in combination with said segment J, the "fly" or device formed of the rods or shafts S T *e*, arms *d d j j*, and hinged ledge or plate d^4; the above feeding and flying devices being arranged and operating conjointly with the segment J, as described.

Third. I claim the rails *m m* applied to the machine and operated substantially as shown, or in any equivalent way, so as to raise or elevate the face *k* of the segment above the form during one movement, and allow it to descend and rest upon the bed during the other movement in order to give the impression to the sheets. And I also claim the bar Z, when used in connexion with the rails *m*, and having the bar j^2 connected with it, as shown, whereby the segment may be raised at any time, and the sheets also prevented from being fed to the form.

Fourth. I claim operating the lateral vibrating ink rollers W X by means of the T-shaped lever Y, as described.

No. 18,545.—GEORGE P. GORDON, of New York, N. Y.—*Improvement in Printing Presses.*—Patent dated November 3, 1857.—This

invention consists in the peculiar means employed for feeding a continuous sheet of paper to its proper place of printing, and in the use of adjustable shears or knives to cut off the proper length of paper or cord, after the same has been printed, as fast as the printing is done, and by the same operation. Also, in providing side arms, or a frame, for the purpose of carrying the inking rollers in such a way as to give the same a continuous reversible motion, as the rollers pass over the form; so that the impression may be taken at each alternate motion of the frame up and down, and this, in combination with the means employed for actuating the reciprocating bed-carriage, upon which bed the form of types is placed.

This improvement will be further understood by an examination of the engravings and claim.

The inventor says: I *claim*, first, the arrangement of a bed, with its form of types, between two distributing tables, so that the impression may be taken while one table is inking the rollers and distributing the ink by passing to and fro upon the distributing table on one side, and at the alternate time an impression may be taken while the rollers are passing over the opposite distributing table; thus allowing of the reversal of the rollers at the extreme ends of the two tables, meeting and inking the form in its transit from one extreme to the other, and allowing the impression to be taken at each inking of the form without waiting for the return of the rollers.

Second. I claim the arrangement of the variable eccentric, or its equivalent, with the sheet guides or gauges, and friction feed rollers, for the purpose of drawing in evenly the sheet or strip any required distance.

And I further claim the arrangement of means described for feeding, printing, cutting, and counting the cards or sheets of paper, with the means described for the inking and alternately distributing the ink, as set forth.

No. 18,618.—Stephen Wilcox, Jr., of Westerly, Rhode Island.—*Improvement in Printing Presses.*—Patent dated November 10, 1857.—When this improved machine is in operation, a sheet, fed by the lower edge of I, is seized by the gripers *g* and drawn over the form on bed A, and delivered to the gripers g^1 on the platen B; the same movement draws the ink rollers over the form, and does the inking, bends up the fly, and closes gripers g^1 and *h*.

The return movement rolls the platen over the bed giving the impression, draws table *m* back to receive the printed sheet, opens the gripers to allow the fly to lay the sheet, and carries the ink rollers over cylinder *t* to receive a fresh supply of ink for another impression.

Claim.—First, the adaptation of the eccentric segment B to the stationary bed A, when said segment is held to the bed by radius bars C C, and operated substantially as set forth.

Second. The elastic fly bending round the platen, and operating as described.

No. 17,549.—Franklin L. Bailey, of Boston, Mass.—*Improvement in Card Printing Presses.*—Patent dated June 16, 1857.—Motion

being given to the shaft D, cam *a*, in revolving, presses the type form C upon the card and against the bed G. The card sheet or strip is fed into the machine between the rollers R and S, and is held by guides I during the time the impression is made, and the printed cards are separated from the strip by the action of knife O.

The inventor says: I do not claim the combination of feeding guides with the bed against which the card is to be pressed.

But I *claim* applying the guides I I to the bed, substantially as described—that is, so that they may spring or move away from and towards it, and thus not only relieve the card from contact with and friction against the surface of the bed, while such card is descending in the guides, but also to operate the knife and allow it to move backward, substantially as specified.

Also, arranging the guides I I so as to incline back from the vertical plane, the same being for the purpose of supporting the card and enabling the guides to be used without any front lip, as described.

Also, the combination of the spring card-holder M with the card rest or stop K, and the feeding guides or mechanism, and the bed and platen, the said card-holder being applied to the stop K, so as to operate substantially in the manner and for the purposes set forth.

Also, applying the feed and pressure rollers in a rocker frame combined with the vibrating frame F and provided with adjustments, arranged so as to enable the rocker frame to be tipped a little, as occasion may require, to cause the continuous sheet of paper or card-board to operate properly with respect to the position of the form on the platen.

Also, arranging on the shaft R, and so as to operate with the stationary roller, as described, and with the feeding roller, a spring pressure roller U to act against the edge of the sheet of card, so as to maintain its opposite edge in a proper position with respect to the type.

No. 18,589.—Richard M. Hoe, of New York, N. Y.—*Improvement in Feeding Paper to Printing Presses.*—Patent dated November 10, 1857.—This invention relates to an improvement in that class of paper-feeding devices in which sheets of paper are fed to the machine through the agency or medium of what is termed a "drop roller." The claim and engravings explain its nature.

The inventor says: I do not claim feeding sheets of paper to printing presses and analogous machines by means of a feeding cylinder, in connexion with a series of endless belts or tapes, and a drop roller; for such device is well known, and in common use.

But I *claim* giving the drop roller F a constant or regular speed, corresponding at all times to that of the other running or working parts of the device, by bringing said roller F, when in an elevated position and detached from the cylinder D, in contact with the impelling roller O, actuated by the belts or tapes K, as and for the purpose set forth.

No. 18,640.—Richard M. Hoe, of New York, N. Y.—*Improved Mode of Operating Fly-Frames of Printing Presses.*—Patent dated Novem-

ber 17, 1857.—The engravings and claim show the nature of this improvement.

Claim.—Operating the fly frames I by means of cam shafts C, placed one at each end of the machine, and provided with cams D E F, and used in connexion with arms *j m p*, rods *i l o*, arms K, and springs M, or an equivalent device, whereby the cams are made to actuate the fly frames in a more direct manner, and consequently insuring a more perfect operation of the same than heretofore.

No. 18,527.—JEDEDIAH MORSE, of Canton, Mass., assignor to the S. P. RUGGLES POWER PRESS MANUFACTURING COMPANY, of Boston, Mass.—*Improvement in Hand Printing Press.*—Patent dated October 27, 1857.—The claim and engravings show the nature of this invention.

The inventor says: I do not claim the combination of one or more cam plates K M, a cam lever L, and one or two sets of rollers, or their equivalents, arranged between the said cam lever and cam plates, as I am aware that such mechanism for operating a platen is not new.

Nor do I claim arranging the platen spring on the top of the arch or frame of the press, and applying it to a bolt and other devices for lifting a platen, as shown, or used in the well known Albion press invented by Cope. I so arrange the rod F depending from the spring G as to cause it to pass through the lever pitman, and other mechanism for depressing the platen, the same serving not only to support the whole in place, but as a fulcrum for the lever to work on.

I am aware that the foot of the lower toggle of a press has been attached to the toggle by a screw, whereby the impression could be adjusted.

I *claim* arranging the lifter rod E with respect to its spring G, the cam lever L, the pitman I, and cam plates N N, substantially in the manner, and so as to operate therewith, as described.

I also claim the arrangement of the regulating wedge on the lifter rod, and between the depressing mechanism and the crown of the arch, substantially as described.

No. 17,824.—E. E. BARRETT, of Chicago, Ill.—*Improvement in Inking Rollers for Printing Presses.*—Patent dated July 21, 1857.—The ink roller I is made hollow, and is perforated by a number of small holes, through which the ink which is in the interior of said roller, oozes out and saturates the cloth by which it is enveloped; as the rod E is depressed, the roller I passes from under the type box F, and is brought in contact with the lower face of the diffusing plate N, which spreads the ink evenly over its surface.

Claim.—Saturating or coating the inking roller of a printing press with ink, in the manner substantially as and for the purposes set forth.

No. 17,449.—CHARLES POTTER, Jr., of Westerly, R. I.—*Improvement in Oscillating Printing Presses.*—Patent dated June 2, 1857.—The bed plate B can be adjusted by operating screws *i*, by which the levers *h* and bearings *b* of said plate can be adjusted. The sheet to be printed is placed upon the feed board *l* up to guide *m*; as the segment D comes

to the position shown in figure 2, the cam p, operating through its levers p^1 and n n^1 and rod p^2, raises the feed board until it nearly touches the segment D, when it comes in contact with a toe r on the griper shaft, and shuts the gripers on to the sheet, when the sheet is drawn in and impressed.

The inventor says: I do not claim lifting the feed board for the purpose of carrying the sheet to the gripers, independent of its application or adaptation, as described.

Neither do I claim actuating the "fly" by a cam and spring, as that is common.

But I *claim*, first, the manner of adjusting the impression by means of the levers h and screws i, substantially as described.

Second. I claim the use and adaptation of the lifting feed board l for carrying the sheet to the gripers, when combined with the oscillating eccentric segment D.

Third. I also claim operating the fly a by the cam S, when so constructed as to cause said fly to conform to the motions of the bed B and oscillating eccentric segment D, as fully set forth.

No. 17,543.—Jedediah Morse, of Canton, Mass., assignor to the S. P. Ruggles Power Press Manufacturing Company, of Boston, Mass.—*Improvement in Power Printing Presses.*—Patent dated June 9, 1857.—A detailed description of this invention would take up too much space; the principal features thereof will be understood by reference to the claim and engravings.

Claim.—The combination and arrangement of mechanism or devices for supporting the sheet of paper over the carrier or frisket carriage, and guiding and presenting it to the discharging apparatus; such devices consisting of the cords n^2 n^2, the rollers 12 m^2, the drum o^2, cord p^2, and the barrel or pulley q^2, provided with a spring, or its equivalent, as described.

Also, the combination of the cam u and stud v with the rocker toggle and its operating cam, the same being for the purpose as specified.

Also, the combination for regulating the rotary motion of the ink fountain rollers, the same consisting of the adjustable stop lever m^3, the connecting rod h^3, cam c^5, the lever f^5, the weighted plate K^3, and the pawl l^5, and the internal ratchet s^5, constructed and applied together substantially as specified.

Also, combining with the pile platform and fly a mechanism substantially as described, which, by the reciprocating movements of the fly, shall lower the platform in correspondence with the increase of thickness of the pile; such mechanism being the cam on the fly shaft, the pawl thereof, and the train of gears and racks applied and operating as specified.

Also, the mechanism or combination for imparting to the ink cylinder h endwise motions, as described; the same consisting of the grooved pinion or gear o and the inclined gear p, constructed, arranged, and applied together, so as to operate substantially as specified.

No. 17,388.—GORDON MCKAY, of Boston, Mass.—*Improvement in Registering Apparatus for Printing Presses.*—Patent dated May 26, 1857.—This apparatus may be applied to any printing press now in use. When the mechanism of the press raises the paper board *a* to the position represented in figure 1, at which position the points *x* are brought below the face of the paper board and the brushes *e* are raised, the operator then places the printing paper on board *a*, and upon the board being brought to position figure 2, the spring *g* forces down the brushes *e*, and the pins *x* penetrate the paper; on the pins *x* being now withdrawn from the paper, the latter is retained in its position by brushes *e*, and the nippers of the press can seize and carry off the sheet for the usual purpose.

Claim.—The use of brushes, or equivalents, for the purpose set forth, when automatically operated and combined with register points.

No. 18,032.—MOSES S. BEACH, of Brooklyn, N. Y.—*Machine for Wetting and Cutting Paper for Printing Presses.*—Patent dated August 25, 1857.—The paper is taken from the reel A, and, after passing it through guide B, it is moistened by the pressure between the covered cylinders C D, which receive moisture from the cylinders E F, which are partially immersed in water tanks G H. At every revolution of the cylinder C, the pins I fixed to the side frames J release the knives *a b* by tripping the ends of the catches *e f*, and the knives enter the grooves *i*, cutting the paper which is pressed between the two cylinders, and the sheet thus cut off is carried out of the machine by tapes K. The knives *a b* are then returned within the cylinder by the pressure of the ends of the bars on cams R.

The inventor says: I do not, therefore, claim broadly the wetting of paper by means of wet or moistened rollers applied to one side of the paper and not to the other.

Neither do I claim broadly the cutting of paper by means of a saw-edge knife, whether the knife be attached to a stationary frame or to a cylinder, and whether projected against the paper by means of cam and lever or springs.

But I *claim*, 1st. Simultaneously wetting or moistening both sides of the paper, in the manner substantially as described.

2d. Leaving the paper dry at the point or line of cutting, substantially as described.

3d. Catching the knife when retired within the circumference of the cylinder, retaining it while so retired, and releasing it from the operation of cutting by means of the catches *e f*, the springs *j*, and the tripping pins I, in the manner substantially as described.

4th. Combining the cutting apparatus with the wetting cylinders or rolls, substantially as described.

No. 16,581.—WILLIAM H. ELLIOT, of Plattsburgh, N. Y.—*Printing Stamp.*—Patent dated February 10, 1857.

The inventor says: I do not claim the joint H as a stop for terminating or stopping any motion of the die-carrier B around pin or centre K, and giving to said die-carrier a new and distinct motion; a device for this particular purpose being found in a hand stamp in-

vented by Mr. P. A. Ramsey, of Boston. The principal object of joint H in my invention being to confine one portion of die-carrier B as nearly as is requisite to a direct or longitudinal motion.

I claim, first, the crank F, joint H, or their equivalents, when used in combination with type or die C.

Second. The same in combination with the treadle *m*.

Third. The self-adjusting ink pad E.

Fourth. Tilting the ink pad E so that by the action of the type or die upon it it may be revolved.

Fifth. The combination of the die or type C with the crank F, when arranged as specified in relation to the two pads.

No. 16,641.—WILLIAM H. ELLIOT, of Plattsburgh, N. Y.—*Printing Stamp.*—Patent dated February 17, 1857.—The devices referred to in the claims serve to carry the die from the impression pad to the inking pad, and *vice versa*, by revolving the cranks H F in the direction of arrows 1 and 2; power to be applied only in one direction.

Claim.—First. The crank F and crank H, when used in combination, operating in any manner substantially the same.

Second. The same, when working in combination with the treadle M, as specified.

Third. The combination of spring P and crank H, when operating as specified, in combination with crank F.

No. 17,340.—SAMUEL T. SANFORD, of Fall River, Mass.—*Improvement in Stencil-Plate Printing.*—Patent dated May 19, 18. 7.—Rotary motion being given to the rollers C D E in the direction of the arrows, the roller C is supplied with ink from the fountain G, and the roller D receives the ink from roller C. The paper or cloth J is placed between the two rollers D E, it being upon the stencil plate H; the roller D thus makes the impression upon the paper.

The inventor says: In the London Mechanics' Magazine, vol. 57, page 393, 1852, may be found a description of a stencil press, which consists in the use of flat or curved stencil plates, in combination with color rollers, composed of flexible materials, for depositing colors on fabrics through the plates; I therefore disclaim the invention of said device.

But, to the best of my knowledge and belief, it is new to have the stencil plate made in the form of an endless belt, as set forth.

I claim having the stencil plate made in the form of an endless belt H, as and for the purposes set forth.

No. 17,194.—STEPHEN D. CARPENTER, of Madison, Wisconsin.—*Improvement in Machines for Printing Subscribers' Names on Newspapers.*—Patent dated May 5, 1857.—The types, when sit on the circumference of wheel B, correspond to the names of persons to be addressed. By pressing down the treadle *l*, the platen *g* is forced down, causing an impression to be made on the newspaper, which is held to the types. On releasing treadle *l*, spring F forces up platen *g*, and treadle *l* and pawl *o* turn cylinder B the length of one tooth, bringing a new name under the platen *g*, ready for the next operation.

Claim.—First. The construction of the cylinder B, made, as described, in sections, with flanges *b*, to which India rubber or any flexible material is secured for receiving the type, which type are set on the face of the cylinder in columns, as described, for the purposes set forth.

Second. The said cylinder, in combination with the platen, operated as described.

Third. The combination of said cylinder with the devices whereby it is rotated, as set forth.

No. 16,856.—JOSEPH WAPPENSTEIN, of Philadelphia, Pa.—*Improvement in Metallic Seals.*—Patent dated March 17, 1857.—A represents an envelope containing a letter, the two being united together, and the envelope sealed by the fastening B. A^1 represents an envelope containing a letter, the two united together by a cord, and the envelope fastened by said cord, the ends of the cord being secured by this invention so that in either case the letter cannot be removed without detection.

Claim.—A metallic seal, wafer, or fastening, for securing letters, packages, &c., composed of two pieces of the shape described, and united together and to the thing to be fastened, substantially in the manner set forth.

No. 18,065.—JOHN TOULMIN, of Worcester, Mass.—*Improvement in Vibrating Shears.*—Patent dated August 25, 1857.—The blade K can be adjusted to give it the most effectual shearing position by turning the set screws H and *d*.

Claim.—Hanging the movable blade of a pair of shears by two adjustable centre pivots upon an adjustable pillar block, substantially in the manner described, and for the purpose of so adjusting the movable blade of said shears as to give it the most effectual shearing position in relation to the stationary blade, as set forth.

No. 16,608.—PERLEY A. RAMSAY, of Boston, Mass.—*Hand Stamp.*—Patent dated February 10, 1857.—The ink roll K is pivoted to block L, which latter may be removed, together with the roll, for the purpose of putting on a fresh supply of ink without soiling the hands. The operation will be understood from the dotted position of the movable parts.

The inventor says: I do not claim stop J^1 as a guide for the purpose of guiding arm G, or confining it to a longitudinal motion, several devices for that purpose being found in the hand stamp invented by William H. Elliot. The principal object of stop J^1 in my invention being to terminate or stop the motion of arm G around axle E, thereby causing said arm to take a new and distinct motion.

I *claim* the arm G pivoted to the truck D, in combination with the stop J^1 and ink roll K, operating in the manner substantially as set forth.

Second. I claim the method described of hanging the ink roll, for the purpose set forth.

No. 16,731.—HORACE HOLT.—*Hand Stamp.*—Patent dated March 3, 1857.—The toe G of the hand lever F serves to depress the platen K. The toe Z operates the lever N to which the ink roller M is attached.

The inventor says: I do not claim operating the platen or stem and the inking roll by simple operation of the hand.

But I *claim* the combination of a detached lever with its toe pieces for inking and taking the impression, when said inking and impressing devices are returned to their places by springs L and *m*, as set forth.

No. 16,712.—LEONARD BAILEY, of Winchester, Mass.—*Hand Stamp.*—Patent dated March 3, 1857.

Claim.—Arranging an ink fountain and its discharging roller at the foot of the slider and between the same and the type or printing plate, and so as to be movable therewith, substantially as set forth.

I also *claim* arranging the forked lever L of the inking roller with respect to the slider C, substantially as described; so that while the palm of a person's hand is placed on the top of the slider, one or more of the fingers can operate said lever, or the upper arm thereof, in a manner to move the inking roller backward against the type, and into a position to come in contact with the fountain roller F when the slider is next depressed.

No. 18,249.—T. J. W. ROBERTSON, of New York, N. Y.—*Hand Stamp.*—Patent dated September 22, 1857.—D is a shaft which passes horizontally through the shank B. Upon this shaft are placed the type wheels *c d e*, which revolve, independently of each other, on the shaft. The faces of these type wheels may be provided, respectively, with the names of the months of the year, and also the ten numerals. The shaft is arranged at such a distance from the face of the ring C, that the type wheels may be turned so that the types upon them will come in line, or form a horizontal plane with the types on the ring C. By this arrangement an impression can be made at the same time from the types on the ring and the wheels.

The inventor says: I do not claim broadly the employment of revolving type wheels for making impressions; for I am aware that such wheels have long been known and used. They are seen, for example, in nearly all book-paging machines. But, to the best of my knowledge and belief, no hand stamp like mine has ever before been known or used.

I *claim* the construction of hand stamps in the manner described and represented.

No. 17,587.—COLEMAN SELLERS, of Philadelphia, Pa.—*Postage Stamp and Label Sticker.*—Patent dated June 16, 1857.—The operation of applying the label is as follows: The surface of the article to be labelled is moistened; the protruding label of the pile S in the box A is pressed upon the moistened part by handle E, and the adhesive matter on the label will cause it to adhere to the article. Upon withdrawing the instrument, one label will be pulled out from the box A, leaving the next one within the flanges *a* exposed ready for use; the

loose edges of the stamp are then pressed down by the second application of the sticker.

Claim.—The combination of the lips or flanges, or their equivalents, in the label-holder, with the follower, or its equivalent, for the purposes above specified, when said lips or said follower, or their equivalents, are made of such form as to cause the stamps or labels to bulge out beyond the face of the stamp-holder, substantially as described.

Also, the attachment of the follower, or its equivalent, with the handle, to convey the pressure directly to the stamps or labels, substantially as described.

No. 18,947.—E. E. Barrett, of Salem, Mass.—*Improvement in Hand Stamps.*—Patent dated December 29, 1857.—This improvement consists in a peculiar arrangement and combination, by means of which the stamp is inked and the impression made by a single blow of the hand, without the necessity of spreading the ink upon the surface of the roller, which not only has a tendency to daub it up, but also requires to be constantly replenished.

The claim and engraving will show the nature of this improvement.

Claim.—So arranging and constructing the ink fountain O, that, when combined with the inking roller of a hand stamp press, it shall serve the double purpose of inking the roller and distributing the ink over its surface in the manner substantially as described.

No. 16,962.—Alexander Beckers, of New York, N. Y.—*Apparatus for Exhibiting Stereoscopic Pictures.*—Patent dated April 7, 1857.—The slides D in which the pictures are inserted are attached at right angles to the endless belt B, which passes around the two shafts B; by turning one of the shafts, by means of a knob on the outside of the box, the slides are passed one by one before the eye-glass E, the light coming in through glass *d*. The pictures are fastened to the slides B by inserting them within the grooves *f*, and then drawing the India rubber band *e* over their upper edge, as represented at the right hand side of fig. 1.

Claim.—1st. Arranging the pictures at right angles to the endless belt, in the manner and for the purposes substantially as described.

2d. The described mode of securing the pictures in the grooved slides, by means of the elastic bands *e e* and notches *f f* in the ends of the grooved portions of the slides.

No. 18,209.—Jesse K. Park, of Marlborough, N. Y.—*Composition for Preparing Tracing Muslin.*—Patent dated September 15, 1857.—This composition consists of eight parts of spirits of turpentine, eight parts of castor oil, two parts of Canada balsam, and one part of balsam copaiba; this, when well mixed, is applied to the tracing muslin by means of a sponge.

Claim.—The employment of the oil of the palma christi, or castor oil, alone, or as an ingredient in the composition for increasing the transparency of tracing muslin, as specified.

No. 16,947.—WILLIAM H. HOUSTON, of Belfast, Maine.—*Machine for Composing and Distributing Type.*—Patent dated March 31, 1857.—The operation of this machine is as follows: The types being arranged within the compartments of the case A, a single key O is depressed, by which means the corresponding lever L is raised, its spring *n* entering the slot in the end of one of the compartments and forcing out a type, as seen in fig. 3. Eccentric E now trips lever R, and plate D springs up, pressing the type against slide A^2. Lever M now strikes against lever P^2, drawing down lever o^2; and pawl d^2, being now free, engages with ratchet wheel M^2, and shaft C is set in motion; the plunger B now advances, and the type is carried to the end of trough A^2, where it is received by plunger T, which carries it into the line of type being composed, fig. 2. The stops B^2 being now forced back by weight Q, the thickness of a type is prevented from returning by spring pawl *v*. When the line of type is full, the operator turns shaft E^2 and raises rule Y, forcing up lead m^1, fig. 6, from the galley X^2. The cross-bar G^2 is now thrown forward by cam K^2 upon shaft E^2, and the line of type is transferred to the galley X. The distributing part of this machine is constructed on the same principles as the composing machine, and similar devices are used for distributing the types; forwarded to the trial case s^2, fig. 8. This trial case is placed directly in front of the forwarding case t^3, and immediately over a case A furnished with compartments to receive the types. The edges of the types are furnished with nicks, the position of which varies upon each letter; and the compartments of the trial case s^2, fig. 9, are furnished with pins, the positions of which correspond with the nicks upon the types, each type having certain combinations of nicks; and the types whose nicks correspond with pins in the case s^2 drop through said case into their compartment in case A, while the others are thrown out and are passed on until each finds its respective compartment.

Claim.—First. The described machine for composing types, operating in the manner substantially as set forth.

Second. The method described of selecting the types from the cases by means of the springs *n*, or their equivalents, operating in connexion with the keys O, in the manner substantially as set forth.

Third. The method of transferring the types to the stick by means of the plungers B and T, or their substantial equivalents, as set forth.

Fourth. Raising the rule Y, and throwing forward the line of type upon the galley by the means described, or by any means substantially the equivalent thereof.

Fifth. The method of feeding forward the types in the cases by means of the slipping bands *f*, rods *j*, and cylinder K, or their equivalents, operating in the manner substantially as set forth.

Sixth. The wheel F^2, with its ratchet wheel M^2, and the connexions N^2 O^2 d^2, or their equivalents, whereby this wheel is caused to give motion to the shaft C whenever any one of the keys is depressed, as set forth.

Seventh. The described method of connecting the crank U with the pitman W, by means of the springs *f*, operating as set forth.

Eighth. The distributing machine, constructed, arranged, and oper-

ating in the manner substantially as described; by means of which a column of type, when placed in the machine, is distributed automatically in the manner set forth.

Ninth. The method described of forwarding the types to the trial case by means of the vibrating case t^3, operating in the manner substantially as set forth.

No. 16,743.—WILLIAM H. MITCHELL, of Brooklyn, N. Y.—*Improvement in Machines for Composing Types.*—Patent dated March 3, 1857.—This is an improvement on letters patent granted to the inventor August 30, 1853, and consists in the means for dropping the types on to the series of belts *m* therein set forth; also in means for setting up the types into a continuous line as they arrive on the diagonal belt *o* at the composing wheel; and also in means for facilitating composing the types into pages, and justifying the same by the use of a peculiar grab to transfer each short line to the compositor's stick from the continuous line of the machine.

Claim.—The manner of dropping one type at a time from the lines of types in the conductors *g*, by the combined operation of the pushers 52, stop 55, and fingers 56, substantially as and for the purposes specified.

Also, inclining the composing wheel, when used in connexion with the inclined chute or conductor 59 and fence 60, on the lower side only of the inclined composing wheel, for the purposes and substantially as specified.

Also, the compositor's grab 65, formed in the curved shape, and used in the manner and for the purposes specified.

No. 18,264.—WILLIAM H. MITCHELL, of Brooklyn, New York.—*Machine for Distributing Type.*—Patent dated September 22, 1857.—The nature of this invention consists in an inclined check block, acting in connexion with notches in the types, proportioned to the width of said types, and a vibrating separator, whereby one type at a time, and no more, is separated from the line of types, irrespective of its thickness.

This invention will be more fully understood by an examination of the claim and engravings.

The inventor says: I *claim*, 1st. The inclined check block I, in combination with notches in the sides of the types, so placed that notch of the first type comes in contact with the said inclined check block when the type is projected its thickness beyond the end of the slide containing the line of types, so that only one type at a time is separated from the line of types, as specified.

2d. I claim the use of studs or pins uniformly placed to take notches variously placed in the types, thereby sustaining the types in various positions to be dropped or distributed, when said types reach receptacles adapted to the peculiar positions of said types.

3d. I claim the method described of distributing types by the revolving wheel I, with its grooves and pins X, when combined with the stationary inclines or offsets, substantially as specified.

4th. I claim distributing types from uniformly placed and moving

pins, or their equivalents, by the use of a second notch in the type, combined with suitable offsets or inclines to disengage the first notch of the type, and then allow the type to be suspended by the second notch for distribution, substantially in the manner specified, thereby providing for distributing greater varieties of types without requiring extreme accuracy in the position of the notches, as specified.

5th. I claim the oscillating ring *y* and connecting rods Z, in combination with the pushers 32, for the purpose and as specified.

No. 18,175.—TIMOTHY ALDEN, of New York, N. Y.—*Type-setting and Distributing Machine.*—Patent dated September 15, 1857.—A description and illustration of this machine would take up too much space to be given here.

Claim.—1st. The method, substantially as described, for conveying the type to and from the type cases and the composing and setting tables, consisting of a type-carrier in combination with a series of conveyors, which are capable of receiving any type indiscriminately, and also of receiving an indication representing the type so received, or that required, whereby that type may be deposited in or taken from the type cases, substantially as set forth.

2d. The described or any equivalent method of attaching the conveyors to the carrier, by which they are permitted to stop while delivering or receiving type, without arresting the motion of said carrier, substantially as set forth.

3d. Giving to the conveyor a vibratory or tilting motion upon its central pin, whereby its gripping end is made to closely approach the place at which the conveyor is to receive or deposit a type, for the purposes and in the manner substantially as described.

4th. In combination with the devices or mechanism for receiving and for delivering the types into and from the type cases, as described, or their equivalents, I *claim* arranging the types edgewise in said cases; whereby, for all the types of a font, an uniform throw or action may be given to said mechanism.

5th. In combination with the type channels, the mechanism for pushing out the type, consisting of the rack, pendulum lever, and propelling rod, and the pusher upon the conveyors, or any equivalents thereof, as described.

6th. In combination with the type channels, the mechanism for preventing the stopping of a setting conveyor at a type channel when it is empty, or a distributing conveyor at a channel when full of type, consisting of the tilting bar s^7, the pendulum lever, and rack, or equivalents, as described.

7th. The method of discharging the type from a distributing conveyor into the type channels, or of causing it to be received from such channel into a setting conveyor, consisting of the cam d^6 and the pusher plate b^6, or equivalents thereof, as described.

8th. The mechanism for setting the gripping bolt upon the conveyors, and for releasing the same, consisting of the stationary cam u^5 and crank lever f^5 for the setting of said bolt, and for the releasing thereof of the latch v^5 and cam or pin y^6, as described.

9th. The method, substantially as described, of effecting or insuring the deposit of each type into or the taking thereof from an

appropriate case, consisting of the excavated ring m^5, or any equivalent thereof which shall have upon it at or near each type case a device indicative of the denomination of the type contained in said case, and which device shall cause at the proper place an action of the conveyor to receive or to deposit a type, as the case may be, in accordance with any given set upon the conveyor, as set forth.

10th. The stationary inclined pieces g^7, in combination with the grooves of the ring m^5, for restoring the indicating points upon the conveyor to a zero or starting point, as described.

11th. The movable indicators e^7, or their equivalents, in combination with the grooves in the ring m^5 and with the shifting bars of the distributing mechanism, as described.

12th. The method of setting the distributing indicators by means of the system of levers z^3, or equivalent mechanism, so constructed and operated as to be acted upon by a system of nicks upon the type; by which certain parts are allowed to be brought into operation to move the indicators, in accordance with the plan or combination of nicks, and whereby the appropriate case or place of deposit of type is indicated upon the conveyors, as described.

13th. The graduated stop c^4, in combination with the indicating levers z^3, for regulating the feed of the line of type, as described; and also in combination therewith the mechanism described under e^4, i^4, and l^4, for restoring said levers into position when about to return for a new setting, and for setting the frame y^3 against its guide plate, as described.

14th. The arrangement of mechanism for transmitting the movements produced upon the levers z^3 by the nicks in the type, and for effecting the proper combinations upon the indicators e^7, consisting of the detaining levers n^4, the bars p^4, bar f^4, bars v^4, bar y^4, and the connecting levers g^4, together with the operating cams upon the shaft j^4, or any equivalent combination, whereby the same results will be produced, as described.

15th. The mechanism for feeding up the column of type, and for elevating the successive lines thereof into the channel, or equivalent devices, as described.

16th. The method of engaging and disengaging the feeding pawls, consisting of hanging lever a^3, in combination with the frame x, with the means for depressing the bolt d^3, and with the ratchet having the engaging and disengaging wedges, as described.

17th. In combination with the keys, the arrangement of mechanism whereby the separate different signals represented by each of a great number of keys may be produced by a less number of indicators, as described.

18th. The radially revolving registering levers in combination with the register wheel and with the keys, as described, or the equivalents thereof.

19th. The independent registering apparatus, constructed as described, or its equivalent apparatus, which will effect the recording of the letters or signs, as indicated by the keys, independently of the type-carrying apparatus, substantially as set forth.

20th. The mechanism for transmitting the indications from the

register, consisting of the detaining levers K *o*, or equivalents, in combination with the setting indicators and with the register, as described.

21st. So combining the register and the setting indicators f° with the type-carrier, that the latter shall effect the movements of the register to set the indicators in time to act upon the setting conveyors, and immediately thereafter effect the retreat of the said indicators previous to the passage of a distributing conveyor, as described.

No. 17,218.—ANDREW HETT, of Augusta, Ga.—*Violin Attachment.*—Patent dated May 5, 1857.—The nature of this invention consists in providing an ordinary violin with four additional strings *r*, which pass through the bridge *a*, under the fingerboard *o*, and under the ordinary strings *c* to the attachment A, the strings *r* being so tuned as to vibrate all the sharp and flat tones.

Claim.—The application of the vibrating strings to violins, violoncellos, and other similar instruments, in the manner described and for the purpose set forth.

No. 18,544.—JACKSON GORHAM, of Bairdstown, Ga.—*Violin Attachment.*—Patent dated November 3, 1857.—This invention consists in an adjustable device fitted to the violin in such a manner as to be capable of pressing the strings upon any portion of the fingerboard, to enable ordinary performers to execute music in any key, fingering only those keys in which the great mass of performers play.

Claim.—The lever B, having its fulcrum *d* in a support *c c*, which is movable on a board or piece A, attached to the head of the violin, and having a screw C, or its equivalent, applied to it, the whole operating as described.

No. 17,324.—BRADLEY FITTS, of Charlton, Mass.—*Improvement in Violins.*—Patent dated May 19, 1857.—The bells A which are placed within the interior of the violin will vibrate in harmony with the strings of the instrument when the latter are played upon, and thus increase the power and improve the tone of the instrument.

Claim.—The application of bells within the interior of or behind the sounding-board of a violin or other stringed musical instrument, substantially as and for the purpose set forth.

No. 17,515.—HENRY A. PHILLIPS, of Providence, R. I.—*Improvement in Constructing Watch and Locket Rims.*—Patent dated June 9, 1857.—The plate being struck up by means of suitable dies to the shape represented in fig. 1, it is placed within a wooden chuck F of a lathe. The burnisher C, of the shape represented in the engraving, is then screwed on screw shaft E, and the plate H is fitted to shaft 1. The chuck F is now rotated, and burnisher C is held stationary; and, by pressing a hand burnisher against the projecting rim of the case, it is readily turned over the edge of burnisher C, and takes the form designed by the shape in which the periphery of the burnisher is made.

The inventor says: I do not claim the striking up of the halves of a case for watches or lockets by means of a die and former.

Neither do I claim the making of locket rims out of single pieces of metal, instead of two or more.

Neither do I claim making the same out of sheet metal, instead of wire.

But I *claim* the shaping burnisher, fig. 3, or its equivalent, for the purpose of producing a continuous rim from the same metal upon the halves of watch and locket cases, constructed, applied, and operated in the manner and on the principle substantially as described.

No. 18,033.—ELIHU BLISS, of Newark, N. J.—*Combination of Watch Keys with Finger Rings.*—Patent dated August 25, 1857.—The barrel A is pivoted at *a*, between the ends of the fillet of the ring B, and can be turned on said pivots. It is held respectively in a horizontal and vertical position by the spring of the ring, the fillet being formed with grooves *b* and *c* corresponding to said positions of the barrel.

Claim.—A watch key and finger ring combined, substantially as set forth.

No. 18,213.—ROSWELL H. ST. JOHN, of Bellefontaine, Ohio.—*Improvement in Watchmakers' Lathe.*—Patent dated September 15, 1857.—The nature of this invention will be understood by reference to the claim and engravings.

Claim.—The construction of the chuck formed of the jamb disk *d d*, the tubular clutch collar or ward brush *e e*, with the centring plate *i i*, and adjustable jaws J K L, together, and combined with a keying mandrel *a* 3 *b c*, substantially as shown and described.

No. 16,811.—WILLIAM STEPHENS, of Richmond, Ind.—*Improved Chuck for Watchmakers' Lathe.*—Patent dated March 10, 1857.—The wheel, being such as is used in watch movements, cannot be readily detached from and replaced true on its shaft. By properly placing the shaft between the two jaws D D, so as to place it more or less out of line, the pivots may be turned on the ends of the shaft *e* eccentrically with the shaft, so that the pivots will be in line with the centre of the wheel *f*. The dotted lines in fig. 3 represent the original pivots, and the full lines represent the pivots as afterwards turned on. The rod C slides in cylinder A so as to adjust the back centre to fit shafts of varying lengths.

Claim.—I am aware that a chuck has been invented to be used in connexion with cement for holding the shaft and wheel; but these will only allow concentric pivots to be turned. I would remark that by my improvement the ends of shafts may be drilled either concentrically or eccentrically, to allow pivots to be fitted in the ends of the shaft in case the former pivots of a shaft are broken off. This cannot be done in the usual lathe, nor by any tool used by watchmakers.

I do not claim separately the sliding or adjustable jaws D D, for they have been previously used in chucks; but I *claim* the sliding or adjustable jaws D D in combination with the sliding or adjustable back centre rod C, arranged substantially as described for the purpose set forth.

XIX.—FIRE-ARMS.

No. 17,339.—ALBERT POTTS, of Philadelphia, Pa.—*Centrifugal Battery.*—Patent dated May 19, 1857.—Rotary motion being imparted to the wheels A B C by a belt and pulley K, the balls are inserted into the hollow axle at D, and are thrown by the centrifugal force of the wheel out of the barrel.

The discharge of the ball at the proper time can be regulated by eccentrics E F acting on levers N O, which operates pawls Q and ratchet wheels H; the axles of the ratchet wheels pass through the barrels and are formed with notches, and the balls are discharged whenever, by turning wheels H, a notch on said axle comes in line with the barrel of the revolving disk.

Claim.—The combination substantially as described and for the purpose specified.

No. 18,876.—JAMES N. WARD, of New York, N. Y.—*Improvement in Bayonet Fastening.*—Patent dated December 15, 1857.—The claim and engravings explain the nature of this invention.

The inventor says: I do not claim simply the method of securing the bayonet by putting a catch below the stud, as a similar device has been long used in the ring fastening.

But I *claim* the method of securing the bayonet by means of the spring A, constructed essentially as described, hinging or turning about some point on the bayonet or gun, for the purpose specified.

And I claim the right to attach the spring in such manner to the barrel or bayonet as shall prevent its turning further than necessary, and to use any mechanical contrivance, such as studs, &c., to effect the same object.

No. 16,819.—NATHAN SCHOLFIELD and WILLIAM W. WRIGHT, assignors to NATHAN SCHOLFIELD, of Norwich, Conn.—*Improved Bomb for Killing Whales.*—Patent dated March 10, 1857.—The inventors say: We are aware that the fuse has been applied to bombs by being inserted in a pipe, and molten metal afterwards poured in the end of the pipe around the fuse to encompass and hold it tightly, and other modes of fastening the fuse have been adopted; but we do not claim the mode here referred to, or any heretofore used, nor do we claim the application of metallic wings or feathers to govern the direction of a projectile.

We *claim*, first. Inserting the end of the fuse through a short holding pipe or collar G, and securing it firmly therein by compressing the same; and the drawing or forcing this within the end of the fuse pipe, having a conical enlargement at its rear end.

Second. Enlarging the end of the fuse cord, by winding it with twine, or its equivalent, so that it cannot be drawn through the pipe, and inserting it in the fuse pipe, either with or without the fastening

pipe *e*, and putting gypsum, brimstone, or wax around it within the nut A, to hold it securely.

Third. We claim the application of the sliding collar *h* on a projectile carrying a cylindric metallic plate covering the projectile, and either slit to form wings *k*, or unslit as a cylindric case, and so constructed that the said collar, with the case or wings, shall slide to the rear after being discharged from the gun, either by the action of a spring *s* or the resistance of the air to guide its direction.

Fourth. We claim so constructing and applying these wings *k* that they may coincide with the cylindric surface of the projectile while in the gun, and that their rear ends may be thrown up therefrom by their elasticity after being discharged, so as to stand in positions diverging from that surface, in the rear, substantially as described.

No. 17,370.—JULIUS GRUDCHOS and SELMAR EGGERS, of New Bedford, Mass.—*Improved Bomb Lance.*—Patent dated May 26, 1857.—The chamber D being filled with powder, the piece K, together with spring L, is pressed down on the breech, when the lance can be slid down the barrel of the rifle. When the rifle is discharged, the spring L throws the trigger back to the position represented in the engraving; and on the lance entering the whale, said trigger is pressed still further backward, thus lifting the rear spring H and disengaging hammer F, which now will be forced against the nipple by the action of the spring I, thus causing the lance to explode.

Claim.—The arranging the tube *o*, for the purpose described.

Also, the arranging the trigger K, the trigger spring L, the sear spring H, the main spring I, the hammer F, the tube E, in the manner and for the purpose described.

Also, applying the grooved ball M, for the purpose of giving the lance a rotary motion to prevent it striking sidewise.

No. 18,824.—NATHAN SCHOLFIELD, of Norwich, Conn.—*Cushion for Wings of Bomb Lance.*—Patent dated December 8, 1857.—The claim and engraving explain the nature of this invention.

The inventor says: I do not claim the act of connecting guiding wings or other apparatus to a projectile in its discharge.

But I *claim* the application of one or more springs, S or *i*, as a medium for modifying the effects of percussion of a projectile when entering a case of guiding wings placed at the muzzle of a gun, to prevent the violent dynamical effect of a rigid and instantaneous concussion thereon by the projectile in its discharge.

No. 17,173.—RUFUS SIBLEY, of Greenville, Conn.—*Improvement in Bomb Lances.*—Patent dated April 28, 1857.—This invention consists in causing a lance or projectile B to take from the muzzle of the gun A the wings D, that are to rotate and guide it through the air and water, by inserting the hub C, to which the wings D are attached, into the muzzle of the gun A, when, on the discharge of the lance B, the projections C will pass into the grooves *e*, and thus secure the wings D to the lance.

Claim.—Causing a bomb lance or projectile to take the wings that

are to guide it through the air or water from the muzzle of the gun from which it is discharged, substantially in the manner set forth.

Also, sloping the muzzle of the gun so that the wings may come back and close down to the barrel, substantially as set forth.

No. 18,424.—SAMUEL DRIVER, of Philadelphia, Pa., assignor to Himself, ISAAC V. CULEIR and JOEL B. SUTHERLAND, of the same place.—*Improved Bomb Shell.*—Patent dated October 13, 1857.—The nature of this invention consists in making a bomb with a series of smaller bombs within it, so that on its explosion the fusee of each of the enclosed bombs shall thereby be ignited and subsequently explode. In the drawings, A is the outer shell; B, the opening left for the introduction of smaller bombs; C C C, the small bombs; W is the powder; D is the stopper for closing the opening; and E the screw bolt which holds the stopper.

The inventor says: I *claim* a bomb consisting of an outer shell adapted for admitting and containing within it, beside the explosive and destructive materials, a series of smaller distinct bombs, each charged with explosive and destructive materials, and fitted with a fusee, so that on the explosion of the outer or containing bomb, the fusee of the inner bombs shall be ignited thereby, and the bombs consequently exploded in consequence wherever they may chance to be thrown by the explosion of the larger or containing one, the said bomb being constructed substantially as set forth and described.

No. 18,616.—WILLIAM H. WARD, of Auburn, New York.—*Improved Bullet Machine.*—Patent dated November 10, 1857.—The claim and engravings explain the nature of this invention.

The inventor says: I *claim*, 1st. Arranging the feeding clamp, and mechanism for operating it, in such a manner that the limit of the backward motion remains unchanged, while the forward motion is regulated by the amount of wire required to form the blank, as set forth.

2d. The combination of the adjustable stop *k*, the wire, and the mechanism for carrying the wire forward, for the purpose of regulating the length of the feed, without changing the limit of the backward motion of the feeding mechanism.

3d. The method of regulating the size and density of each blank before it is severed from the wire, by means of a pair of compressing forceps, or their equivalent.

4th. The employment of two pairs of cutting and grasping forceps, or their equivalent, for dividing the wire, so arranged and operated as to grasp the wire, as described, and sever it between their adjacent faces.

5th. The combination of the oil box, arranged as described, with the cutting forceps, for the purpose set forth.

6th. The combination of the discharging collar with the punch, and the mechanism for opening the dies, for the purpose of releasing the bullet from the dies, and discharging it from the machine.

7th. Arranging the joint between the two pairs of forceps, so as not to be in the same plane, for the purpose set forth.

8th. Arranging the groove around the cavity in the die, as described,

so as to allow the air to escape from the die and prevent the passage of the lead into the groove.

9th. Making the opening in the die of less diameter than the base of the bullet, and of the exact size of the blank, for the purpose set forth.

10th. The method of gauging the blank and forming the base of the bullet by means of an annular projection in the base of the die.

11th. The method of forming bullets of variable weight and of the same external form with the same set of dies and punches, by constructing the die with a projecting annular base, so that the punch can be entered into the blank a greater or less distance, and thus expand the recess in the base of the blank, so that it will accurately fill the die, and thus form a perfect bullet.

No. 16,910.—Henry L. De Zeng, of Geneva, N. Y.—*Improved Bullet Mould.*—Patent dated March 31, 1857.—In forcing the handles of this bullet mould apart, the cutting-bar C, turning on the rivet *b*, which connects it to the cam-jaw B, until the end of the slot *d* strikes the pin *e*, will cause the point of cam B to be forced downwards, and the jaw B to press against the jaw A. In this position the mould is to be filled, when, by drawing the handles towards each other, the blade of the cutting-bar C will strike against the surplus lead on the surface of the mould; this will cause a strain upon the rivet *b*, which will prevent the jaw B from opening until the blade has passed over the opening in the mould, and removed the lead. The end of the slot *d* will then strike the pin *e*, forcing up the end of cam B until the jaw B is separated from A, so that the bullet can be made to drop out.

Claim.—The movable cam-jaw B, in combination with the cutting-bar C, constructed and operating substantially as specified; whereby the movable jaw is held to the stationary jaw while the bullet is being cast by forcing the handles apart, and on pressing the handles together, the projection from the bullet is first cut off, and then the movable jaw is thrown back to discharge the bullet, substantially as specified.

No. 16,327.—Tristram Campbell and Henry B Poorman, of St. Louis, Mo.—*Improvement in Bullet Moulds.*—Patent dated January 6, 1857.—The lead is poured into the trough J, and passes thence into the moulds of the mould-bars E, which are then right under trough J, the apparatus being in the position represented in figure 2. When the moulds are filled, the lever N of fulcrum O is thrown into the position of figure 1, the edges of the trough J cutting off the necks of the bullets. By then releasing the lever D, the action of spring C separates the mould-bars E from each other, which allows the bullets to drop out.

Claim.—We make no claim to the series of parallel mould-bars, as such is not new.

Neither do we claim the separation of the waste lead by the movement of the plate through which the molten lead is poured.

But we *claim* the mechanical arrangement of the trough-knife J

with the lever D, draw-bar G, and springs C and I, operating as set forth.

No. 16,629.—FREDERICK D. NEWBURY, assignor to RICHARD VARICK DE WITT, Jr., of Albany, N. Y.—*Improved Mode of Patching Bullets.*—Patent dated February 10, 1857.—Figure 2 represents the bullet with the patch, and the ledge pressed over it.

Claim.—The method of securing a patch upon conoidal or similar bullets by compressing the upper portion of the patch under a thin ledge *a* of the metal of the bullet, substantially as described.

No. 17,920.—JOSIAH DODGE, of Dummerston, Vt.—*Improved Mode of Discharging Cannon.*—Patent dated August 4, 1857.—When the breech-wheel C is in the position represented in figure 1, the hammer *h* rests against the inclined surface *c*, as shown in figure 2; and when the breech-piece B joins the barrel D, the hammer slips from the inclined surface *c*, and, by force of spring *x y*, strikes the cap on the nipple and discharges the piece.

Claim.—The double spring hammer *s h*, as described, in combination with the inclined surfaces *a b c*, arranged and operating substantially as and for the purposes set forth.

No. 18,117.—GEORGE W. BAKER, of Burlington, Vt., assignor to Himself and ABIJAH FRENCH.—*Improvement in Percusion Cap Primers.*—Patent dated September 1, 1857.—The caps *m* are continuously forced towards the mouth *z* of the primer by means of arm *d*, which is acted upon by spiral spring *h*, the caps being prevented from escaping by the elastic portion *i* of the case, which acts like a spring, and by lifting said spring a cap will be forced through the mouth *z*.

Claim.—As a new article of manufacture, the described percussion cap primer, whose improvement consists in the peculiar construction which enables one side of the case of said primer to serve as an elastic cap retainer at the side of the outlet of said case, substantially as set forth.

No. 16,587.—CHARLES HICKS, of Haverstraw, N. Y.—*Improved Machine for Ramming Percussion Caps.*—Patent dated February 10, 1857.—The stationary plate W is provided with holes which allow the pistons just to pass through them, and serve to pull from the pistons as they rise any caps that may adhere to them after the ramming operation, and cause the said caps to drop into their proper holes in the carrying plate F.

Claim.—First. The pistons E E, arranged in a row, and receiving reciprocating rectilinear and circular movements, simultaneously operating in combination with the travelling carrying plate F, or other equivalent devices for carrying the caps, substantially as described.

Second. Producing the circular movement of the pistons by means of pinions *c c* on the said pistons gearing with a toothed rack G, that receives a sliding movement laterally to the frame which carries the pistons, and imparts to them the rectilinear movement from a lever

K, operated by a cam J, on the crank shaft, by which the rectilinear movement of the pistons is produced, substantially as described.

Third. The employment of the stationary plate W, in combination with the reciprocating pistons and the travelling carrying plate F, substantially as and for the purpose set forth.

No. 16,646.—CHARLES HICKS.—*Improved Machine for Varnishing Percussion Caps.*—Patent dated February 17, 1857.—Before the plate A containing the caps has been slid into the machine, the frame $c\ c^1\ c$, with the rods $b\ b$, is depressed by means of lever D, so that the ends of the rods enter into and become charged with the varnish in the trough F. The frame and rods are then elevated, the plate A with the caps slid into the machine through the guide-groove G, and then the frame and rods are again depressed until the ends of the rods enter into and touch the bottom of the caps, thus charging them with the varnish necessary for the following operation of filling them.

Claim.—First. The combination of a vertically moving frame $c\ c^1\ c$, carrying a number of wires or rods $b\ b$, or their equivalents, to take up the varnish; a trough F to contain the varnish; and suitable guides above the said trough to receive a plate which carries the caps; the whole being constructed and operating together substantially as herein described.

Second. The plate H, containing holes corresponding in number and arrangement with the wires or rods $b\ b$, or their equivalents, arranged relatively to the trough F, the vertically moving frame $c\ c^1\ c$, and the guides G, substantially as herein described for the purpose set forth.

No. 17,792.—WILLIAM B. JOHNS, of the United States Army.—*Improved Shot Cartridge.*—Patent dated July 14, 1857.—The flange *a* of the base B expands at the moment of discharge, and tightens the cartridge in the bore of the piece. The copper disk D is designed to give stiffness to the seat of the shot, and the disk of felt F secures the mouth of the cartridge.

Claim.—The combination of the counter-sunk base piece B, copper disk D, case C, and felt disk F, as set forth.

No. 17,287.—EDWARD LINDNER, of New York, N. Y.—*Improved Cartridges.*—Patent dated May 12, 1857.—The paper cylinder of this cartridge is secured to the ball by casting the ball in the mould, when the paper *a* with its bent border is previously placed in the form; *r* represents a leather ring, which is equally cast in with the ball, and which serves the purpose of a barrel-cleaner when the ball is fired. The fulminating stuff of this cartridge is placed in the cup *b*, which is secured to the ball *d* by wire *m*, which is cast in said ball.

The inventor says: I do not claim joining two metals together while one of them is in a melted state; neither do I claim a cylindrical flange of malleable material cast as above, and described by J. B. Read in his patent of October 28, 1856.

But I *claim* a cartridge, in which an annular wad, and the casing to

contain the powder, are formed of the materials above described, and secured thereto by the act of casting the ball in the manner specified.

No. 17,702.—GILBERT SMITH, of Buttermilk Falls, N. Y.—*Improvement in Cartridges.*—Patent dated June 30, 1857.—The nature of this invention will be understood by reference to the claim and engravings.

The inventor says: I do not claim generally the packing of the joint between the barrel and the breech by the expansion of a cartridge case of soft metal, nor the construction of a cartridge case so as to be retained in the chamber after the discharge.

But I *claim* making the cartridge case, or at least the cylindrical portion thereof, of India rubber cloth or vulcanized India rubber, so that though entering loosely into the chamber by confining it within the chamber, it may be expanded laterally by the force of the explosion of the charge against a joint between the barrel and breech made near the middle of the chamber to close the same hermetically, and (unlike metal) may, after the explosion, contract itself by its own elasticity, so as to admit of its being easily withdrawn from the chamber by the fingers of the operator, substantially as described.

No. 18,217.—LEMUEL WELLS, of Astoria, N. Y.—*Improvement in Ball Cartridges.*—Patent dated September 15, 1857.—The nature of this invention will be understood by reference to the claim and engravings.

Claim.—The attachment of a hard metal shell *a* of a ball cartridge to the bullet, substantially as described, by making it smaller than the bullet, and driving it into a cavity in the rear of the bullet.

No. 18,143.—J. DURELL GREENE, of Cambridge, Mass.—*Improvement in Cartridges for Breech-Loading Fire-Arms.*—Patent dated September 8, 1857.—This cartridge may be employed in many of the breech-loading guns now in use, by inserting the nipple into the barrel at a point slightly in advance of the ball; the force of the explosion drives the ball *a* against the wad *c*, which is thus pressed against the joint of the breech, and all escape of gas at this point is avoided, while the elasticity of the wad tends to diminish the recoil of the piece, and effectually prevents the upsetting of the ball. The ball and wad are now forced forward sufficiently far to allow another cartridge to be introduced behind them; and upon the explosion of this cartridge, the first ball is discharged; the one belonging to the cartridge remaining behind, as before, to pack the joint.

Claim.—The described cartridge, having the ball behind the powder, and a wad behind the ball, operating in the manner as set forth.

No. 16,367.—ETHAN ALLEN, of Worcester, Mass.—*Improved Fire-Arm.*—Patent dated January 13, 1857.—The force of the explosion of the cap on the nipple forces the conical valve H towards the aperture *x* leading to the chambers L, and thus the fire passes out of the base of the nipple G, and round the valve H, to ignite the charge in the chamber, which, when exploding, forces back the valve against the nipple, thus closing the vent, and preventing any escape of gas. The

ramrod I can be operated by means of guard N, which turns on pivot O, and the cogs on segment M, which mesh into cogs of ram I, and thus force it into the chamber.

Claim.—Placing the valve H in the chamber at the base of the nipple, when constructed and operated substantially as described.

Second. I claim supporting and retaining the chamber A by the parts B D and C, when constructed and operating substantially as set forth.

Third. I claim operating the rammer by means of the lever N, said lever forming a guard for the trigger, as described.

No. 17,644.—GILBERT SMITH, of Buttermilk Falls, N. Y.—*Improved Breech-Loading Fire-Arm.*—Patent dated June 23, 1857.—The nature of this invention will be understood by reference to the claim and engravings.

The inventor says: I do not claim generally the packing of the joint between the barrel and the breech-loading fire-arms, by the expansion or other action of a portion of a cartridge consequent upon the explosion of the charge; as I am aware that the butt or rear portion of the cartridge has been used to pack the joint in that way, when the said joint has been made at the extreme rear of the chamber, and close to the face of the breech.

Neither do I claim generally the retention of the cartridge case in the chamber until after the discharge.

But I *claim* making the chamber D to receive the charge in the form of a cartridge, partly in the barrel C, and partly in the breech A, and so much larger than the general bore of the barrel as to have a shoulder *f* in front to retain the cartridge case thereon till after the discharge; whereby the joint S, between the breech and the barrel, is brought near the middle of the chamber, and not in a corner at the extreme rear, or in front thereof, and is caused to be packed by the lateral expansion of an elastic cartridge case. And though I do not claim the clamping lever F represented, for securing the barrel to the breech, I claim furnishing the said clamping lever with a projection I so arranged as to be acted upon by the hammer H, in the act of cocking the latter, for the purpose of insuring locking the breech and barrel together before the discharge, and effecting the operation of cocking the hammer and locking the breech and barrel by one movement.

I further claim the sight *m*, constructed with a round stem *n*, flattened on one side, and having a spring *p* applied to it, substantially as described, for the purpose of enabling it to be adjusted and secured at various elevations, as set forth.

No. 17,642.—JOHN P. SHHENKL, of Boston, Mass.—*Improved Breech-Loading Fire-Arm.*—Patent dated June 23, 1857.—By turning lever I, pin *m* on disk *k* forces back bar K, the bent portion *g* of which presses back the tumbler E, turning it on its centre pin *d*, and thus cocking the gun. As the movement of lever I is continued, the cam *l* strikes against the corner of notch *t*, and forces the barrel A forward, off from thimble C; and as the forward weight of the muzzle overbalances that of the breech, the barrel is thrown into the position represented in dotted lines, ready for loading. By reversing the motion of

lever I, the end *r* of bar *k* raises the barrel A to a horizontal position, and brings it up close against the breech thimble C. By pulling trigger H, the needle *c* is thrown forward and the piece is fired. When the hammer D is thrown down in the act of firing, the pin c^1 being in the position represented in fig. 4, enters the long groove b^1; but when the hammer is let down slowly, the restraint of the hand on the upper end of lever *x*, at d^1, presses the lever against the resistance of of its spring a^1, in the position shown at fig. 5, and the pin c^1 enters groove e^1 and rests against the lower end of it, holding the lock securely in half-cock position.

Claim.—First. The method described of stopping the hammer at half-cock by the pressure of the thumb, as set forth.

Second. The bar K, constructed as described, and operated by the pin *n* and lever I, for the purpose of cocking the gun and of returning the barrel into line with the thimble C, and locking it therewith, substantially as set forth.

No. 17,386.—William W. Marston, of New York, N. Y.—*Improved Repeating Fire-Arm.*—Patent dated May 26, 1857.—By pressing on the end 5 of the dog F, said dog becomes disengaged from the teeth of cylinder G, and the exploder *h* can be turned with cylinder *g*, so as to come below the lowest nipple 7; in this position the caps can be placed on the nipples. By cocking the piece the dog *f*, being pivoted to the lower part of the hammer, turns the cylinder *g* such a distance that, on discharging the hammer, the barrel *a* will be fired by exploder *h* striking the nipple thereof; in a similar manner the two other barrels can be fired.

Claim.—The combination of the exploder *h* and cylinder *g*, actuated by the dog *f*, or its equivalent, to explode successively the barrels arranged vertically over each other, substantially as specified.

No. 18,836.—Ethan Allen, of Worcester, Mass.—*Improvement in Revolving Fire-Arms.*—Patent dated December 15, 1857.—The inventor, in describing his improvement, says: To construct my improvement, make a plate A at the rear end of the cylinder B, between it and the breech plate N, and on the front side of the plate A form a projection G, which shall fit into a radial slot in the rear end of the cylinder; this plate A may be held in its place by a hollow screw, as in this case, or otherwise, as may be deemed best. On the back of this plate A make a ratchet with radial teeth F for the catch E, to work in to move the plate around its centre; also, between the ratchet and the periphery of the plate, make a row of holes *v v v* or recesses to receive the end of the lock pin D, which holds the plate and cylinder in proper position with regard to the barrel in front, while the pistol is being discharged. One object of this plate is to keep the moving and locking apparatus in a manner free from the cylinder, so that it may be more easily removed.

Claim.—The plate A made and operating as described.

No. 16,575.—Francis S. Brettell and Joseph B. Frisbie, of Alleghany city, Pa.—*Improvement in Fire-Arms.*—Patent dated February 10, 1857.—The inventors say: We do not confine our improvement

to be used in revolving fire-arms only, but the same may be used in any other class of fire-arms.

We *claim* the arrangement of the pawl or catch *k*, notch *l*, and claw *m* on the hammer, and the cam *g* on the trigger, or any other arrangement substantially the same, for the purpose of keeping the hammer and the trigger in their respective positions when at full cock, as set forth.

No. 16,846.—SAMUEL K. LOVEWELL, of Gardner, Mass.—*Improvement in Fire-Arms.*—Patent dated March 17, 1857.—The inventor says: In constructing my improved fire-arm, I insert a spindle of about two-fifths the diameter of the bore of the gun within the barrel, and attach the same firmly by screw or welding, or other process, to the breech-pin or breech, so that said spindle shall occupy the centre of the bore, as shown in the engraving at A A^1; a hollow cylindrical cartridge is used, as represented at *b b*, in loading, and a ramrod hollow in part, as seen at *c c*. The slug or ball *d d* is a hollow cylinder conical at one end. The diameter of the hollow of the cartridge ramrod and slug or ball to correspond with the diameter of the spindle, so that the spindle when the gun is loaded will be in, and fill the hollow of the cartridge and slug, and the piece may then be discharged by any of the ordinary processes.

Claim.—The use of the spindle as above described, and in the manner above described, applied to guns of any size and calibre.

No. 17,136.—GUSTAV ADOLPH BLITTKOWSKI, of New York, N. Y.—*Improvement in Fire-Arms.*—Patent dated April 28, 1857.—To detach the breech piece, plug *a* is first revolved by turning handle X from the horizontal to the vertical position, represented in fig. 2. The pins *i* and i^1 are now clear of their fastenings, and the plug is turned backward. By turning the plug, the guard pin *c* strikes the front edge of the hammer *o*, pushing it back to half cock, and the drawing of the plug out of the barrel carries it to full cock. The plug may now have its open end canted upward, turning upon its trunnion pins e^1, and the cartridge may be inserted, when the breech nut is turned back again into its first position, and the piece is ready to be fired.

Claim.—1st. The rotating and oscillating breech piece for receiving the charges, so attached to the stock as to be capable of being withdrawn from the end of the barrel, and elevated to receive the charge, and to be returned thereto with a grinding and wedging action, whereby a secure and tight joint is effected, substantially as described.

2d. The safety guard *c* upon the end of the breech piece, so placed as to prevent the cock from striking the nipple until the said breech piece is secured in the barrel, as described.

No. 17,143.—JOSIAH ELLS, of Pittsburg, Pa.—*Improvement in Fire-Arms.*—Patent dated April 28, 1857.—As the trigger *g* is drawn back, the traverse lever *m* is raised above the cam *n* in the recess of the lock plate, figure 4; the spring *t* presses forward the point of lever *m*, until it enters one of the radial grooves *a* in the revolving breech. By drawing back the trigger *g*, the point of the lever *m*

presses against the straight edge of groove *a*, and causes breech *d* to rotate on its arbor until the point of the lever *m* reaches the lap of the groove, which is so situated in relation to the chambers of the breech as to bring one of them in exact range with the barrel of the pistol immediately before the fall of the hammer; and as the groove is close at the circumference of the breech, the point of lever *m* holds breech *d* firmly in place and prevents its rotation so long as the trigger is held back. When the trigger is released, the point of lever *m* falls, not, however, in the path of groove a^1, but, being drawn back, it passes over the chamfered edge of groove a^1, as represented in dotted lines in figure 3, and, leaving it, recedes in the recoil shield. When next the trigger is drawn back, the point of lever *m* enters groove a^2 of breech *d*.

The inventor says: I *claim* the arrangement of the traverse lever, to permit of its playing on the same centre as the hammer without danger of lateral derangement.

2d. The use of the cam in the lock plate, in combination with the shoulder on the traverse lever, for the purpose of withdrawing the point of the traverse lever from the radial grooves in the rotating breech in the reaction of the trigger, for the purposes before set forth.

3d. I do not claim the radial grooves in the end of the rotating breech as new in themselves; but I do claim the combination of radial bevelled grooves in the rear end of the rotating breech with the traverse lever, as applied to trigger-cocking fire-arms, for the purpose of rotating and locking the breech preparatory to firing, substantially as described.

No. 17,233.—John B. Read, of Tuscaloosa, Alabama.—*Improvement in Fire-Arms.*—Patent dated May 5, 1857.—The conical-shaped extremity of the ball C, fitting into the trumpet-shaped portion of the chamber D, secures it in the axis of the piece, and the ball once on its seat, a few blows of the ramrod force the projections of the ball into the rear of the projectile, and so expand it as to fill the bore tightly.

Claim.—The providing the upper part of the powder space or chamber of fire-arms with angular or wedge-shaped projections, to be forced into the rear of the projectile in the act of loading, as described. Also, the form of ball represented in my drawings, cylindrical at or near its middle portion, with a slight excavation or recess on the inner and under side of the cylindrical part, both ends of the ball to be conoidal or conical.

No. 17,382.—Edward Lindner, of New York, N. Y.—*Fire-Arm.*—Patent dated May 26, 1857.—Between the gun barrel A and the charge barrel B is a rack E, in connexion with a piston or slide W, which acts upon the cartridge in the charge barrel B, and which rack is again in connexion with the gun lock in such a manner that each time the gun is fired off, one of the cartridges is forced into the revolving breech piece D, by which means the whole amount of cartridges contained in the charge barrel can be fired off in the shortest possible time. The revolving breech piece D is each time when the gun is cocked turned round one-sixth part of a revolution by the

mechanism composed of rod *o*, bell crank c^1, slide g^1, bevel rod G, operated by rack h^1 and toothed sector K. The percussion caps are, by an arrangement of springs x x^1 and x^{11}, figure 4, brought exactly opposite the nipple, and are put on the same by the hammer itself at the moment the gun is fired, while the exploded cap is thrown off the nipple when the gun is cocked.

Claim.—The construction, arrangement, and operation of the rack specified—*i. e.*, the rack, when composed of a series of cones superposed to each other, the bases of said cones bearing upon studs 2, that propel the cartridges in one or more charge-barrels ranged around said rack, in the manner and for the purpose specified. Also, revolving the breech piece D by the mechanism specified, when arranged to act upon the interior surface thereof. Also, the plate 3 described, placed in front of the breech chamber, for the purpose of retaining the cartridges in said chambers, which do not face the barrel. Also, the knee piece H, in combination with the hammer L and stop bolt O; the said parts being so arranged in relation to each other that by the act of cocking the gun the stop bolt shall be withdrawn from the recesses of the breech, thus leaving it free to revolve, substantially as set forth.

No. 17,698.—Jacob Shaw, Jr., of Hinckley township, Ohio.—*Improvement in Fire-Arms.*—Patent dated June 30, 1857.—In forcing trigger C to the rear, the cocking ratch H will impel the hammer Z towards the cock point, the force of the mainspring J retaining it in contact with the tooth I of the hair trigger M. The tooth of the rotator ratch *h* now enters the mouth of one of the chambers of the cylinder B, causing it to turn on its tubular shaft G; and when the hammer is nearly brought to the cock point, a part of the trigger which projects laterally beyond the side of arm c^1 comes in contact with arm T^1 of the locking lever, and by its motion drives the bolt on the other arm of the locking lever into the mouth of one of the locking holes V. By now pressing down the hair trigger M into the recess formed in the rear part of the guard, the hammer will be released and explode the cap on the nipple *o*. By releasing the trigger, the spring L will force upward said trigger, and the rotator arm S will come in contact with the upper side of the end of arm T^1, and withdraw the bolt from the hole V, when the operation may be repeated.

Claim—1st. The combination and arrangement of the trigger with the cocking ratch and hammer, whereby the force of the mainspring will cause the trigger to continue its motion in a backward direction after it has been forced back to a certain point and the introduction of the hair trigger, as described, whereby the trigger may be arrested when it has reached that point, and the hammer by this means be held at the cock point, or by a simultaneous action of a force on the hair trigger in a backward direction, the backward motion of the trigger may be allowed, and a consequent disengagement of the hammer be produced to effect a discharge.

2d. The combination and arrangement of the trigger with the rotator ratch and locking lever, and the revolving chambered cylinder or block, whereby this block is revolved and locked from the front, substantially as set forth and described, instead of the usual mode of

the ratchet wheel and pawl in the rear; intending and designing hereby to claim each part and all the parts named in the above claims in connexion with each other, without intending to limit myself to construct them in the precise form set forth and described in the specification or of any particular dimensions, but intending to reserve the right to vary them as I may deem expedient, while I attain the same ends by means substantially the same.

No. 17,904.—JAMES WARNER, of Springfield, Mass.—*Improvement in Revolving Fire-Arms.*—Patent dated July 28, 1857.—As the piece is being fired, the pin *i* of the hammer carries that point of the lever *b* downward which is in contact with the cylinder A, and in so doing will also have a tendency to depress the reverse end; and therefore the pin *i* will then have a bearing against the upper side of the curved slot *a*, and the lever *b* can readily take the backward movement necessary to allow it to pass into the next catch in the cylinder A. On cocking again, the pin *i* acts to lift both ends of the lever *b*; and the coiled spring *h* having again drawn the lever forward, the pin *c* will now rest in the depression.

Claim.—The specific device in the end of the slot for preventing the retreat of the lever *b* in the act of cocking, substantially as set forth.

No. 16,568.—AZEL S. LYMAN, assignor to the "ACCELERATING FIRE ARMS COMPANY," of New York, N. Y.—*Improvement in Accelerating Fire-Arms.*—Patent dated February 3, 1857.—As soon as the gun has been fired and the ball has passed the chambers *d*, the fire in the bore *b* ignites the charges in the chambers *d*, thereby giving the ball additional force.

Before the gun is to be fired, the muzzle is to be covered with some elastic material *i*, and the air to be exhausted by applying an air pump to the opening *e*.

Claim.—The employment of the accelerators or additional charge chambers in the manner and for the purpose substantially as described.

I also claim covering the muzzle and exhausting the air through an appropriate aperture, whereby the atmospheric resistance is removed from the front of the projectile while passing along the bore, as set forth.

No. 18,472.—CHAUNCEY D. SKINNER, of Haddam, and DENNIS TRYON, of Middletown, Conn.—*Improvement in Breech-Loading Fire-Arms.*—Patent dated October 20, 1857.—This invention relates to that description of breech-loading fire-arms in which the whole chamber is made movable, both in a direction parallel with the bore of the barrel, and also upwardly on an axis arranged transversely to the bore, for the purpose of disconnecting it from the barrel, and of bringing its mouth to a convenient position to receive the charge. This invention consists in a novel combination of means for bringing up and securing the chamber in close connexion with and liberating it from the barrel, and guiding the same. It also consists in certain means of preventing a possibility of the fall of the hammer and consequent discharge of the

weapon while the chamber is raised up and out of the line of the barrel.

The inventors say: We do not claim the use of a chambered breech piece, fitted with a slot to slide and swing upon a stationary pin, nor the employment of springs *b* and I to pull back and raise up such breech piece.

But we *claim*, first, the employment, in combination with the chambered breech piece operating and controlled by springs and by a screw, as described, of the lipped projections *f* and *g*, formed, applied, and operating substantially as set forth, to prevent abrasion of the joint between the barrel and chamber by the act of opening and closing the chamber.

Second. Constructing and applying the hammer and sere in the manner described, whereby, when the chambered breech piece is in connexion with the barrel, the tooth or acting point *p*, of the trigger is brought under the heel of the sere; but when the chambered breech piece is raised, the said tooth or point *b* is brought behind the said heel, so that in the former case the trigger is operative, and in the latter can have no other effect than to lock the sere, as set forth.

No. 18,634.—J. Durell Greene, of Cambridge, Mass.—*Improvement in Breech-Loading Fire-Arms.*—Patent dated November 17, 1857.—In this improvement, the barrel A is extended back to form a loading chamber T, into which there is an opening G for the insertion of the cartridge. Through the rear of the chamber passes a revolving sliding plunger C, and through the centre of this plunger a rod D, which carries at its forward end a breech plug E, and at its rear end a button F. The plunger is also furnished with a ball or button I by which it is manipulated, and carries two projecting ears *d*, which, when the plunger is in the position seen in the engravings, enter recesses *e* in the walls of the chamber and rest against the shoulders *r*, by which the plunger and parts connected therewith are held immovable. When the plunger is revolved 90°, the ears *d* clear the shoulders *r*, and the plunger may be drawn back.

The inventor says: I *claim* the groove *i*, or its equivalent, operating in connexion with the wad at the rear of the cartridge, in the manner substantially as set forth.

I do not claim a sliding breech plug, secured to the barrel by ears and shoulders, as such device does not constitute my present invention.

But I claim, second, the sliding breech plug E, in combination with the revolving plunger *i*, operating in the manner set forth.

Third. I claim the bolt C and stop *y*, operating in the manner set forth, to interrupt the movement of the trigger, as described.

No. 16,797.—William Cleveland Hicks, of New Haven, Conn.—*Improved Nipples for Discharging or Withdrawing Cartridges from Breech-Loading Fire-Arms.*—Patent dated March 10, 1857.—K is the breech-pin to which the nipples are attached by driving the rod *v* into the end of the breech-pin. The nipples are represented as having been driven in sufficiently to break through the rim of brass *t*. The cartridge or ball can be withdrawn as the nipple-hooks have taken

hold at the inside of the brass ring *t*. Or, if desired, the charge can be exploded by driving the breech-pin further in, so as to explode the cake of percussion powder *m*.

Claim.—The improved nipples (two or more prongs, with or without hooks *a a*, for withdrawing loaded balls or cartridges from breech-loading fire-arms, as described) for the purpose of igniting percussion and discharging loaded balls or cartridges.

And, secondly, the method of using one, two, or more nipples, or prongs with hooks, as described, to withdraw cartridges or loaded balls from breech-loading fire-arms, by causing said hooks to indent or spring the rim of a cap or primer, as described, and by catching hold of said rim to withdraw the loaded ball or cartridge by the act of drawing back the nipples, all substantially as described and specified.

No. 16,503.—James Noble Ward, of the United States army.—*Improved Mode of Altering Flint-Lock Fire-Arms to Percussion.*—Patent dated January 27, 1857.—In converting the fire-arm from a flint lock to a percussion, the cone seat S is secured upon the curved bottom *a* of the notch cut in the lock plate P. The notch in the cone seat, made up of the two surfaces whose edges are shown by lines *m* and *n*, is made to fit under the inclined projection *f* of the lock. Around the vent passage *i*, in the side of the barrel B, is formed a recess *r*, whose bottom is elevated towards the centre, so as to give it the appearance of a spherical surface. When the lock plate is in position, the recess receives a projection *l* on the flange *d* of the cone seat, whose face fits the ball bottom of the recess *n*, as shown in fig. 3.

Claim.—Securing the cone seat upon the lock plate, and making the contact of said seat and the barrel, substantially as set forth.

No. 18,387.—P. F. Charpie, of Mt. Vernon, Ohio.—*Improvement in Hair Triggers for Fire-Arms.*—Patent dated October 13, 1857.—This invention consists in a certain mode of applying a spring to a single trigger, whereby it is enabled to act as a hair trigger without the employment of so many parts as are in the ordinary trigger, or French set. The claim, as set forth by the inventor, fully explains this improvement.

The inventor says: I *claim* the application of the curved spring D, to work in a notch below the heel of the trigger, in such a manner that, by pushing the trigger forward to set it, the said spring will be bent so as to develop its elasticity longitudinally, or nearly so, and at the same time will be caused to exert a forward pressure on the trigger below its centre pin *a*, and thus keep it set; but that when the trigger is slightly drawn back, the spring will exert a pressure above the centre pin *a*, and thus throw up the heel suddenly, substantially as described.

No. 18,418.—Michael Tromly, of Mount Vernon, Ill.—*Improved Lock for Fire-Arms.*—Patent dated October 13, 1857.—This invention consists in a certain construction of the locks of fire-arms, which enables the same trigger to be used either as an ordinary or hair trigger, and

which affords greater security against accidental discharge in the use of the hair trigger than the hair trigger heretofore in use.

The claim and drawing will show the minutiæ of this improvement.

The inventor says: I do not claim the employment of a toggle joint connexion applied to a hair trigger.

But I *claim* the combination of the tumbler *j*, toggle *e f g*, trigger D, link *p*, lever *u*, spring *r*, screw *t*, and claw *f*, or its equivalent, whether used as a hair trigger arrangement, without the use of a notch *m* in the trigger, or with the notch *m* as an ordinary trigger, substantially as described.

No. 16,411.—Alfred Tonks, of Boston, Mass.—*Improvement in Locks of Fire-Arms.*—Patent dated January 13, 1857.—When the trigger E is retracted, the tooth *a* will be borne against the tooth *d*, so as to crowd the tooth *c* against the shoulder F of hammer B. By continuing to retract the trigger, the hammer B will be raised off the nipple until the tooth *a* passes the tooth *d*, when the hammer will be set free, and, by mainspring F, it will be thrown smartly towards the nipple.

The inventor says: I do not claim raising the striker by a spring latch hinged to the trigger, such latch being disengaged from the striker by means of a cam on one or the other.

I *claim* the described arrangement or application of the spring rocker catch, the tooth *a* of the trigger, and the shoulder *f*, with respect to the striker, its arbor, and the trigger, and so as to enable the striker to be operated substantially as specified.

No. 16,716.—Samuel Colt, of Hartford, Conn.—*Improvement in the Mode of Lubricating Fire-Arms.*—Patent dated March 3, 1857.—The tube A filled with oil is attached to the under side of the barrel. The central stem *b* is held up by a spiral spring within the tube, so as to keep the opening at the lower end of the tube closed. By depressing the stem, oil will be allowed to run out and hang on the end of the stem, which is then further depressed into the one of the chambers of the breech that is in line with the tube. By lubricating the ball, its abrasion and the consequent fouling will be prevented.

Figure 2 represents a section of the tube on an enlarged scale.

Claim.—The method of applying oil or other lubricating matter to the outer surface of the ball, or, as the equivalent, to the bore in close proximity with the ball, after the ball has been inserted, by means of an instrument having a reservoir of liquid lubricating matter, in combination with a valve or other equivalent means for discharging the required quantity of lubricating matter, substantially as described and for the purpose set forth.

No. 17,044.—James Kerr, of London, England.—*Improved Rammer for Many-Chambered Rotating Breech Fire-Arms.*—Patent dated April 14, 1857.—Cam lever *g* passes through a mortise of the rammer *e*; by turning lever *g* on its fulcrum pin *h*, the rammer *e* can be moved up and down freely in a line with the chambers *c* of a rotating breech fire-arm.

The inventor says: I do not limit my claim of invention to the peculiar form of the cam part of the lever, nor to the manner of catching and holding it against the barrel, as these may be modified within the range of my invention.

I *claim* fitting the rammer for ramming the charges in the chambers of the rotating breech of fire-arms in a longitudinal groove in the side of the body or frame, substantially as described, in combination with the cam lever fitted to a mortise in the rammer for operating it in the manner substantially as described.

No. 16,683.—SAMUEL COLT, of Hartford, Conn.—*Improvement in Many-Chambered Rotating Breech Fire-Arms.*—Patent dated February 24, 1857; England, March 3, 1857.—The outer end of the curved grooves is deeper and the inner end not so deep as the radial grooves *i*. In the act of cocking, the pin *j*, running in one of the curved grooves, will turn the breech until the pin falls into the next radial groove, there stopping the rotation of the breech. In the act of discharging, the pin runs along the radial groove, retaining the breech in the same position by reason of the radial direction of the groove. The difference in the depth of the grooves, in connexion with the spring of pin *j*, will insure the running of the pin in the curved groove during the discharge. When the hammer has been brought to half cock, and the breech thereby turned about half the space between two chambers, the pin can then run in the short radial groove *k*, to permit the hammer to be let down and rest on the metal surface of the breech.

From the radial and curved grooves, short inclined planes or concentric grooves *m* are formed extending from the bottom of the main grooves to the surface of the concavity; so that when the hammer is elevated to half cock, and there held, the pin will yield to the inclined surfaces of the lateral grooves, and thus permit the breech to be brought around by hand.

The inventor says: I am aware that the many-chambered breech in repeating fire-arms has been rotated to shift the chambers, and the several chambers in succession held in line with the barrel during the discharge by means of a driving-pin, receiving motion from the cock, and working in longitudinal and diagonal grooves, made sometimes on the outer surface of the said breech, and sometimes on the inner surface of the central bore; and I am also aware that the breech has been thus operated by the driving-pin working in radial and diagonal grooves made on the rear flat face thereof; but when so made, the grooves being formed in a flat surface, and the lock, which imparts motion to the driving-pin, working on a fulcrum or central pin, it was necessary either to connect the driver with the cock by a joint pin, or to give the driver a considerable end play, to compensate for the difference between the curvilinear motion which the driver would receive from the cock, if directly attached to it, and the flat surface in which the grooves are formed. The defects I have avoided by making the radial and diagonal grooves in the rear end or face of the rotating breech, which is so concaved that the surface thereof will correspond with the curvilinear motion of the driver vibrating on the axis of the cock; I do not, therefore, wish to be understood as making claim

broadly to the method of rotating the breech by a driving-pin working in grooves, but to limit my claim to the spiral improvement which I have made thereon.

I *claim* making the series of grooves to be acted upon by the driving-pin, to rotate and hold the breech in a concavity in the rear end of the rotating breech, substantially as and for the purpose specified.

No. 18,678.—SAMUEL COLT, of Hartford, Conn.—*Improvement in Many-Chambered Rotating Breech Fire-Arms.*—Patent dated November 24, 1857.—The claim and engravings explain the nature of this invention.

The inventor says: I am aware that in letters patent granted to Elijah Jacquith, on the 12th day of July, 1838, the many-chambered rotating breech is described and represented as turning on, and connected in place by what may be termed a central pin passing through a central bore; but in that case the parts cannot be solid, because the greater part of the rotating breech is placed above the upper surface of the barrel, and the pin can only be a segment of a hollow cylinder to admit of taking sight; and for these and other reasons such a construction is not practically useful. But I do not, however, wish to be understood as claiming broadly the connexion of a many-chambered rotating breech with the barrel and shield, by means of an axle passing through the central bore thereof, and inserted from the rear end.

I *claim* securing the many-chambered rotating breech in place by a solid pin passing through the central bore thereof, and fitted to a hole in the breech plate, behind and in a line below the bore of the barrel, so as to be inserted from the rear end and there secured, that the said breech may be properly and conveniently inserted within a cavity in the surrounding metallic frame, which connects the barrel with the shield plate, to give the required strength and support to resist the recoil, the main part of the said breech being thus placed below the barrel, by an arrangement substantially such as is described.

And I also claim the adjusting of the rotating breech to the rear end of the barrel by combining therewith, and with the central pin on which it turns, a hollow screw tapped into the shield plate, and bearing against the rear end of the rotating breech, substantially as described.

No. 16,761.—JOHN TILTON and WILLIAM FLOYD, of Rockhouse, O.—*Improvement in Portable Fire-Arms.*—Patent dated March 3, 1857.—The trigger can be turned upwards (see arrow 1) and confined in a horizontal position by sliding back the catch *i* in the direction of arrow 2. When in this position, the spring catch *c* will hold the muzzle cover A, as represented in fig. 2. When sliding the catch *i* forward, the trigger will be thrown into position for use, and at the same time release spring *f* so as to act upon levers *d* and *b* to draw spring catch *c* downward and permit the muzzle cover to fall into position, fig. 1.

Claim.—The combination of the levers *b* and *d*, spring *f*, and bridle *a*, arranged and operating substantially as described, for effecting the simultaneous release of the trigger and removal of the muzzle cover.

No. 16,477.—HEINRICH GENHART, of Liege, Belgium.—*Improvement in Repeating Fire-Arms.*—Patent dated January 27, 1857.—When the hand lever d^1 is forced down, the pins *r r* on the sides of the eccentric *s* force out the mainspring *n*, until the spring catch *v* takes and holds it; and at the same time the eccentric slides the barrel *a* outward to draw the rear end out of the mouth of one of the chambers *i*, that the rotating breech *g* may be turned to bring the next chamber in line; and then, by drawing up the hand lever, the eccentric is turned in the opposite direction to draw back the barrel and force its rear end into the enlarged mouth of the next chamber and against the front edge of the ball, to enclose it firmly within its chamber and hold it therein for the discharge of the load.

The inventor says: I do not wish to be understood as limiting my claim of invention to the special construction and form specified, as these may be varied within the principle of my invention.

I *claim* the combination of the rotating breech with radial chambers for containing a series of charges, substantially as described, in combination with the sliding barrel, the rear end of which is fitted to enter the forward end of each chamber when brought in line, substantially as and for the purposes specified.

No. 18,486.—GEORGE R. CROOKER, of New York, N. Y., assignor to GEORGE G. MARTIN, of Brooklyn, N. Y.—*Improved Mode of Priming Repeating Fire-Arms.*—Patent dated October 20, 1857.—This improvement is mainly designed for "Colt's," but will also serve for any other revolving breech fire-arm.

In this invention, when the end of the piece of percussion priming is thrust into the recess, if the piece is revolved, the edges of the recess, coming in close contact with the end of the chamber, act as a shear to cut off that portion of the priming within the recess in which it is conveyed around under the hammer to be exploded in the ordinary way. As each chamber revolves around, each of the recesses, in succession, receive its charges of priming without any other mechanism.

The inventor says: I *claim* the method described of depositing the percussion priming and cutting it off in the recess in the breech, as set forth, constituting a self-priming apparatus, constructed and operating as specified.

No. 17,032.—JOSIAH ELLS, of Pittsburg, Pa.—*Improvement in Revolving Fire-Arms.*—Patent dated April 14, 1857.—When the trigger *o* is drawn back, the shoulder n^1 of the spring *u* enters the groove *v* and the small curved recess *t* in the circumference of the rotating breech *d*, figs. 2 and 3, thus locking said breech at the moment of firing. When the hammer *m* is drawn back, the claw b^1, resting on the under side of cam o^1 of the trigger *o* immediately under the vibrating stud *p*, elevates cam o^1 and draws back the trigger *o;* while the point of pawl *n* slides down the face of the hammer until it reaches the notch *y*, into which it is pressed by its spring t^1. If the hammer *m* could be drawn still further back, so as to cause the vibrating stud *p* to pass the toe of the hammer, the pawl *n* would be forced out again, and the hammer *m* fall; but this is prevented by the claw b^1 on the

hammer, which passes into the recess of the trigger formed by the projecting cam o^1, and, pressing against trigger *o*, secures the hammer and trigger in their position as full cocked, as shown in fig. 2; when in this position, a slight touch on the trigger will cause the vibrating stud *p* to force the pawl *n* out of notch *y*, and the hammer *m* instantly to fall and fire the pistol.

Claim.—First. The use of a self-acting spring stop, operating directly by the trigger, in combination with suitable recesses *t t* in the revolving chambered breech, or their equivalents, for the purpose of locking the breech at the moment of firing, and leaving it free to rotate at other times, substantially as described.

Second. Making a cam *o* for the bearing of the trigger spring on the trigger back of the centre on which it springs, in order to admit of easy play and short motion of the spring, where a long sweep of the trigger is necessary.

Third. Constructing and arranging the trigger spring in such a manner as to serve the double purpose of a trigger spring and spring stop for locking the bolt, as described.

Fourth. The combination and arrangement of the claw *b* and notch *y* on the hammer, the pawl or catch *w*, and cam *o* on the trigger, or other equivalent devices for the purpose of retaining the hammer in sit respective positions when at full cock, and for effecting the rotation of the breech and cocking of the hammer preparatory to firing, either by lifting the hammer or pulling the trigger, substantially as described.

No. 17,359.—Fordyce Beals, of New Haven, Conn.—*Improvement in Revolving Fire-Arms.*—Patent dated May 26, 1857.—The spring catch *b c*, which is secured to the upper part of the recoil shield B by means of a screw *d*, serves to lock the cylinder *c* in position for the discharge, by catch *c* entering the notches *e* of the cylinder. By inserting the cylinder *c* carelessly into frame A, and by pushing forward arbor *a*, the arbor will readily enter the cylinder, as the latter is held in its true position by the circular spring catch *b c*.

Claim.—Making the spring catch by which the cylinder is locked in position for the discharge to conform to the periphery of the cylinder, and project in front of the recoil shield on one side of the cylinder, for the purpose of serving as a resting place or seat to hold the cylinder in place for the insertion of the central arbor, substantially as described.

No. 17,261.—Ambrose E. Burnside, of Bristol, R. I.—*Improved Mode of Overcoming the Windage in Fire-Arms.*—Patent dated May 12, 1857.—In loading this cannon, the charge H is inserted in the bore, then the ball F and cap G are all rammed home; when they reach the enlarged chamber B C, the cap will pass over the ball, and the cannon is charged, as represented at E D.

The inventor says: First. I *claim* the cap or patch which covers the ball or shell, said cap not being permanently attached to the ball, substantially as set forth.

Second. I do not make the broad claim of enlarging the ball by expansive materials.

But I claim the enlarging the cannon ball or shell after it reaches the enlarged chamber of a cannon, by means of a cap or patch of soft expansive material, such as leather, malleable metal, or the two combined, in order that the ball and cap together may be some larger than the bore, and therefore prevent windage in passing out of the bore, substantially as set forth, for the purposes described.

No. 17,863.—ALBERT F. ANDREWS, of Avon, Conn.—*Improved Fuse-Making Machine.*—Patent dated July 28, 1857.—The hopper A being filled with powder up to the orifice C, rotary motion is given to the air tube G and its wings *e* by a belt driving pulley *h*, and the feeding tube B is rotated by a belt driving pulley C^1, while the hopper A and powder-conducting tube A^1 and the laying piece E remain stationary; and the powder in the hopper A is subjected above its surface to a pressure of air through pipe L, which also penetrates tube G through orifice C, and acts upon the powder which has descended the conducting tube at the orifice C, to expel it from the feeding tube.

Claim.—First. The admission of a blast or compressed air upon, into, among, or through the powder on its way through the passage or channel by which it is conveyed to the fuse, substantially as and for the purpose set forth.

Second. Giving the feeding tube a rotary motion outside of a conducting tube and inside a laying piece, both of which are stationary, substantially as and for the purpose specified.

No. 16,634.—JONATHAN ALTMAN, of Armstrong county, Pa.—*Self-Setting Hair Triggered Gun-Lock.*—Patent dated February 17, 1857.—The lever B is pivoted to the part A of the tumbler; lever B acts upon one arm of lever C, which latter is pivoted to standard D on the trigger plate; the other arm of lever C acts on the arm of trigger E; thus, when the hammer is drawn backwards, the trigger E will simultaneously be set, and the end of the arm of trigger E will be forced under the catch in the head of the hair trigger F, and thus both triggers will be set.

Claim.—The mode described of setting the double trigger by the act of cocking the gun, as set forth.

No 17,733.—MAHLON J. GALLAGER, of Savannah, Ga.—*Improvement in Self-Priming Gun-Locks.*—Patent dated July 7, 1857.—By pulling back the hammer A, the sliding rod C is drawn down by the action of pivot I in the groove D. The sliding rod C being drawn below the pellets in the cylinder C, they are moved forward by spiral spring E. As the hammer approaches the nipple B, the sliding rod C forces through the slot L one of the pellets from the cylinder C into the cavity K of the hammer, which is exploded on the nipple B. The slide H on the lock plate, by being moved outward, allows the pivot I to work on the axis of the hammer in the second groove M cut on the lock plate, which releases the sliding rod C from acting on the pellets contained in cylinder C.

The inventor says: I do not claim the cylinder G, the spiral spring

or the mode of inserting caps or primers in the hammer for self-ming purposes, which was invented by N. B. Safford and others.

But I *claim* the shipper H, which relieves the sliding rod C, and ows the fire-arm to which the improvement is attached to be used ith the ordinary percussion cap without exhausting the primers from e cylinder G, or for the convenience of sportsmen, as before described, d without which a self-capping hammer is valueless to sportsmen.

No. 16,860.—JOHN T. FOSTER and JACOB J. BANTA, of Jersey City, J., assignors to Themselves and JAMES H. BANTA, of Pierpont, N. Y.—*Improved Piston for Muzzle-Loading Gun.*—Patent dated March 17, 1857.—The nature of this invention consists in the use of conical packing rings around a piston that is actuated by a rod running through the breech of the gun, so that, after the explosion of the cartridge, the said piston and its conical packing rings are forced from the breech to the muzzle, where said rings project beyond the end of the muzzle, to be brushed off or otherwise cleaned from the dirt and soilage which they have scraped off the inside of the gun in being forced from the breech to the muzzle; and on again drawing back the piston to the breech, the aforesaid conical packing rings enter freely, in consequence of their shape, into the muzzle of the gun. Piston fingers are also provided, having barbed or lanced points on their inner surfaces to seize and draw into the gun the ordinary cartridge of flannel or other material.

The inventors say: We do not claim a piston actuated by a rod passing through the breech of the gun, as the same has before been used. But we are not aware that conical packing rings have ever before been applied to said piston for the purpose of cleaning and scraping off all scale and soilage from the interior of the gun, and delivering the same at the muzzle, and also providing for the instantaneous insertion into the barrel of the said packing rings.

And we are not aware that the barbed fingers have ever before been applied to said piston to seize and draw in the ordinary flannel cartridge, as specified.

We *claim* the conical packing rings 1 1 on the piston *d*, for the purposes and substantially as specified.

We also claim the barbed fingers *e*, in combination with the piston *d*, to seize and draw in the ordinary cartridge, substantially as specified.

No. 17,321.—LAMMOT DU PONT, of Wilmington, Del.—*Improvement in Gunpowder.*—Patent dated May 19, 1857.—72 pounds of powdered nitrate of soda, 12 pounds of sulphur, and 16 pounds of charcoal, all powdered, are mixed together and granulated in the ordinary way. The powder is then glazed by being put into a barrel with a small proportion of black lead, and rolled about for the space of nearly 12 hours.

The inventor says: I do not desire to claim generally the glazing of gunpowder, or the employment of nitrate of soda in the manufacture of gunpowder, except in combination with the glazing of the powder so made, as aforesaid.

But I *claim* the manufacture of gunpowder by the use of nitrate of soda, and the glazing of the powder so made, in the manner and for the purpose described.

No. 16,944.—JAMES WILSON, CHARLES GREEN, and WILLIAM WILSON, Jr., of Brandywine, Del.—*Improved Gunpowder Keg.*—Patent dated March 31, 1857.—The nature of this invention will be understood by reference to the claim and engravings.

The inventors say: We do not claim the mere giving strength to metal by corrugating it, as that effect is well known.

But we *claim* the making the side or cylinder of corrugations *a a a*, and bulge or swell B, when employed with the extra ring or boss D and head C for the purpose of greater strength and more convenient handling, as set forth.

No. 17,915.—IRA BUCKMAN, Jr., of New York, N. Y.—*Walking-Stick Gun.*—Patent dated August 4, 1857.—To load the gun, the body M and barrel N are removed, and the loaded bullet is inserted in the rear end of the barrel; the lock is then cocked, and the body and barrel are replaced, and the gun is ready to be fired. The barrel being loaded, the thimble V is moved back and the section T is rotated, moving back the lock piston so that the catch E falls into the slot in the piston ready for firing. The trigger G is then moved back, releasing catch E from its slot, and allowing the piston H to be thrust forward by the recoil of spring R, and the needle Q to enter and fire the percussion powder in the bullet W.

The inventor says: I do not claim combining a gun and cane together so that they can be used for either purpose.

But I *claim*, 1st. Moving the lock-piston H backward, to effect the cocking of the lock by revolving the section T and its attached spiral cam T^1, as described.

2d. Cocking the lock, for retaining the lock-piston H in position when moved backward to its full extent, by the locking-plate E dropping into a transverse groove in the top of the piston, as described.

3d. The construction and operation of the trigger G, as described, which enables the trigger to be closed up against the body of the gun while the lock is cocked.

4th. The combination of the locking-plate E with the trigger G, as described, by which the strain of the spring of the piston H is brought entirely upon the locking-plate, leaving the trigger free from strain or pressure, and enabling the trigger to discharge the lock with slight effort.

5th. The thimble V, as described, for the purpose of being moved over the lock-catch E and trigger G, to confine and secure them so that the lock cannot be operated without first moving back the thimble.

No. 16,377.—HORACE E. DIMICK, of St. Louis, Mo.—*Improved Mode of Rifling Ordnance.*—Patent dated January 13, 1857.—The nature of this invention will be understood by reference to the claim and engraving.

The inventor says: I make no claim to what is termed a freed bore, separately considered, or to the obtuse angular grooves.

I *claim* a system of straight grooves, extending from the base of the bore to about the position of the trunnions, and twisting from thence to the muzzle, in combination with a freed bore, substantially as described, as an improved mode of applying the rifle principle to ordnance.

No. 16,571.—WILLIAM S. BUTLER, assignor to BUTLER, SUDENG & Co., of Rocky Hill, Conn.—*Improvement in Pistols.*—Patent dated February 3, 1857.—The nature of this improvement will be understood from the claim and engravings.

Claim.—Constructing the pistol by casting the barrel, the frame or main part of the stock, and guard, all in one piece, when the whole is constructed, arranged, and made to operate substantially as described.

No. 18,016.—MAGNUS KLING, of Reading, Pa.—*Improvement in Percussion Powder.*—Patent dated August 18, 1857.—One ounce of oxalic acid is dissolved in boiling water and mixed with one ounce of antimony and one ounce of chlorate of potassa; this is mixed with half a pound of glue dissolved in boiling water to the consistency of a paste, when it is ready to be used for the manufacture of caps or pellets for needle guns.

Claim.—The combination of antimony with chlorate of potassa, oxalic acid, and glue, mixed in the named proportions, for a composition for the manufacture of percussion caps for fire-arms.

No. 18,707.—JOHN B. READ, of Tuscaloosa, Alabama.—*Improved Projectile for Fire-Arms.*—Patent dated November 24, 1857.—The engraving and claim explain the nature of this invention.

Claim.—The surrounding of the cylindrical portion of elongated projectiles with a band of lead, or other fusible metal or alloy, filling a recess, with projections or lugs in the same to prevent its displacement, and provided with one or more vents, extending from the rear of the projectiles to the inner side of said band, for the purpose of expanding it by the gases of fired gunpowder, so as to save windage, and secure rotation by taking into rifle grooves, as more fully set forth in the specification.

No. 17,407.—RUFUS SIBLEY, of Norwich, Connecticut, assignor to CHRISTOPHER C. BRAND, of the same place.—*Improved Projectile for Killing Whales.*—Patent dated May 26, 1857.—Previous to inserting this projectile into the gun, the wings B should be folded down upon the body. As soon as the projectile is ejected from the gun, the wings B turn up, and they being slightly inclined impart to the projectile a rotary motion on its axis.

Claim.—An improved projectile, (to be fired from a gun,) constructed with sheet-metal wings, having journals, or turning on wires or journals arranged so that the said wings may be turned down transversely or laterally on the body of the projectile, or in a recess

or space made to receive them, each being arranged either parallel or inclined to the axis of the projectile, as described.

No. 18,049.—THEODORE T. S. LAIDLEY, of the United States army.—*Improved Projectile for Rifled Cannon.*—Patent dated August 25, 1857.—The nature of this invention will be understood by reference to the claims and engraving.

The inventor says: I do not claim, of course, as my invention, the attachment, to elongated shot or shells, of a cylinder of wrought iron, fastened to the body of the shot by imbedding its bottom or sides in the cast metal of the shot, the cylinder attached to the butt of the shot or shell, and its sides to project beyond.

Neither do I claim the arrangement of a belt or packing of soft metal, which is to be forced out by the gas passing into certain vacant spaces between it and the main body of the shot.

But I *claim* the formation of a cast iron shot or shell, with a wrought iron covering of a portion or whole, which is fastened to the main body of the shot at or near both ends, by imbedding one or both turned-in ends in the cast metal of the shot, or by means of dowels, pins, or rivets, imbedded in the cast metal, and joining the two metals, the body with the covering, firmly and securely, or by a combination of these methods, leaving an intermediate portion of the covering free to be expanded by the action of the gases of the discharge passing through certain channels or passages between the covering and the body of the shot made or left for that purpose.

I also claim making the wrought iron covering thicker at its rear end, which admits of annular spaces being cut into it to hold grease, or for the action of the atmosphere to keep the ball true in its flight, as in the improved ball for muskets, and also throws the bearing parts of the projectile nearer the centre of gravity, insuring greater accuracy.

No. 16,753.—MALCOM SHAW, of Sandwich, Mass.—*Improvement in Projectiles.*—Patent dated March 3, 1857.

The inventor says: I am aware that double shells with separate chambers for explosive and incendiary materials have been used. I therefore do not claim such, independent of the devices combined therewith.

I *claim* the improvement upon this kind of shell whereby I am enabled to use melted metal as the incendiary material, and which consists in lining the chamber of the incendiary material with some non-conducting and refractory substance *b*, such as pipe clay, black lead, &c., and perforating the iron to allow the escape of the gas therefrom, thereby providing against premature explosion and retaining the heat in the melted metal.

No. 17,312.—CHRISTOPHER C. BRAND, of Norwich, Conn.—*Improvement in Projectiles.*—Patent dated May 19, 1857.—The fuse tube or plug C is so constructed that one end of the fuse rope G comes up to the vent hole *g*, the fuse rope passing through the chamber *l*, thence around the plug C in the groove *o*, thence through the chamber *k*

into the load chamber *x* of the bomb. The spaces in the chambers *l* and *k* are filled up with lead to retain the fuse rope in its proper place.

The inventor says: I do not claim the employment of metal or metallic plugs, or the equivalents thereof, made to closely encompass the fuse rope after it has been inserted in the fuse tube or plug.

I do not claim the application of wings to a projectile, whether said wings be stationary or movable.

But I *claim* the improved fuse tube or plug C, as constructed with two plug chambers *k l*, separated by a breech or partition N, the same being for the purpose as specified.

I also claim the improvement of making said tube C with an encircling chamber or recess *o o*, arranged substantially in the manner and for the purpose set forth.

No. 18,568.—Henry Bates, of New London, Conn.—*Improvement in Projectiles.*—Patent dated November 10, 1857.—This invention consists in the attachment to the butt end of a bomb, or other projectile of similar character, of a spiral spring or coil of wire, which, when the projectile is placed in the gun from which it is to be discharged, is compressed together and lies close to the projectile; but which, when the projectile is discharged, is caused, either by reason of its own elasticity or by the resistance of the atmosphere, to extend itself in the form of a tail some distance in the rear of the projectile, where, by the resistance it meets with from the atmosphere, it serves to direct and steady the flight of the projectile. The invention further consists in preventing the fuse from being blown through the fuse tubes of the bomb by the discharge of the gun, and thereby igniting the charge of the bomb before the latter leaves the gun, by bending the said tubes after the insertion of the fuse therein.

The inventor says: I do not claim the attachment to a projectile of a tail, to be inserted with it into a gun, and to be extended after leaving the gun, as I am aware that tails of such character have been applied to gun harpoons for whaling purposes.

I *claim*, first, the employment of a tail, consisting of a spiral spring or coil of wire applied to the bomb or other projectile, as and for the purposes set forth.

Second. Securing the fuse in the fuse tubes of the bomb by bending the said tubes after the insertion of the fuse therein, as described.

No. 16,755.—John M. Sigourney, of Watertown, N. Y.—*Improvement in Projectiles for Rifled Cannon.*—Patent dated March 3, 1857.

Claim.—Recessing the cylindrical part of cylindro-conical shot and shells in such a manner that the contact of the said shot and shells with the bore and grooves of the gun be confined to the projecting ribs B and belts A, which belts and ribs are finished to fit the bore and grooves with precision, substantially as set forth.

No. 17,935.—Theodore T. S. Laidley, of the United States Army.—*Improved Projectile for Rifled Cannon.*—Patent dated August 4, 1857.—The nature of this invention will be understood by reference to the claim and engravings.

The inventor says: I do not claim, of course, the attachment of a malleable iron tube to a cast iron head, which tube, forming the body of the projectile, is expanded by the force of the discharge so as to take the grooves of the rifled gun.

Neither do I claim the attachment to elongated shot or shells of a cylinder of wrought iron fastened to the body of the shot or shell by having its bottom or sides more or less imbedded in the cast metal of which the shot may be composed, the cylinder to be attached to the butt of the shot or shell and its sides projecting beyond.

But I *claim* the attachment to the main body of an elongated projectile, either solid or hollow, of a covering of some malleable material, composed of one or more pieces, embracing the whole or a portion of the exterior surface, by imbedding in the cast metal of the shot the turned-in end, and two or more longitudinal seams or edges, so as to form on the cylindrical surface of the projectile two or more pockets, having a free space between the cast metal of the shot and the malleable covering, into which the gases at the moment of discharge entering will force out the covering and cause it to fill the grooves of the rifled gun, and diminish or entirely cut off the windage of the projectile, whether fired from a rifled or smooth bored cannon, substantially as described.

No. 18,401.—James H. Merrill, of Baltimore, Md.—*Improvement in Projectiles for Rifled Ordnance.*—Patent dated October 13, 1857.—In the drawing, A represents a conical-shaped projectile, having its base rounded out, as shown at *a*, and hollow, so that powder may enter and explode therein. The rim *b*, between the outer edge of the shot and the chamber or bore *a*, is quite thin at the extreme rear end, but it gradually thickens until at a line drawn through its solidity would prevent its being expanded by the gas.

The inventor says: I *claim* making the base of a projectile that is cast in one piece, cup or bowl shaped, and slotting the metal between the hollow and the outside of the projectile, so as to allow said base to expand by the force of the gas to fill the grooves or bore of the gun, substantially as described.

No. 17,886.—John L. McConnel, of Jacksonville, Illinois.—*Improvement in Projectiles for Smooth-Bored Guns.*—Patent dated July 28, 1857.—The nature of this invention will be understood by reference to the claim and engravings.

Claim.—The improvement of the projectiles known as "egg-shaped," which consists in so grooving the surface, as described, that, when discharged from any smooth-bored gun, with the larger end foremost, the combined effects of the centre of gravity being in front, and the grooves (acted upon by atmospheric pressure) shall give to the projectile an accuracy of flight when so fired, similar to that produced by the rifle, and approximating thereto.

No. 18,866.—Nathan Scholfield, of Norwich, Connecticut.—*Improvement in the Fuses of Shells and other Projectiles.*—Patent dated

December 15, 1857.—The claim and engravings explain the nature of this invention.

The inventor says: I wish it understood that I do not claim the construction or application of guiding wings in any of their varieties to a projectile.

I *claim*, first, the application of a perforated conical protecting plug *e*, penetrating the end of the fuse cord, and the connecting it thereto by some plastic and adhesive substance, and also inserting this with the fuse cord in place, in the conical cavity opening from the fuse to the vent chamber, for the purpose of securing more perfectly the ignition of the fuse, while the flame from the discharge of the gun is prevented from passing in outside the fuse, or of forcing the fuse inward, as described.

Second. I *claim* opening or expanding the end of the fuse cord, and applying it under the seat of a protecting plug *e*, and causing the plug to be pressed firmly thereon so as to secure it from being forced through the aperture by the discharge.

XX.—SURGICAL INSTRUMENTS.

No. 16,602.—JULIA M. MILLIGAN, of New Albany, Indiana.—*Improved Abdominal Supporter.*—Patent dated February 10, 1857.

Claim.—The application of the whalebone, or any other article substantially the same, and the cords or strings, as used in the manner described, by which the requisite mechanical support may be obtained.

No. 16,485.—EDWARD G. HYDE, of Irvington, N. J.—*Acoustic Auricle.*—Patent dated January 27, 1857.—A vibrating diaphragm C, or artificial ear, is fitted to the tube A of an ear trumpet, at a suitable distance from the mouth, thereby enabling deaf persons to hear distant sounds with far greater distinctness.

Claim.—The vibrating diaphragm, or artificial ear C, applied to an acoustic instrument or ear trumpet, substantially in the manner and for the purpose set forth.

No. 17,948.—NOAH WARLICK, of Lafayette, Ala.—*Improvement in Shower Bath Apparatus.*—Patent dated August 4, 1857.—By turning the bolt C the valve V is carried with it, and thus the passage *o* can be opened or closed. The discharge of the water is stopped by turning bolt C and carrying the valve against stop S'.

The inventor says: I do not claim the distributor or rose drip D; neither do I lay claim to the portability of the apparatus.

But I *claim* the combination of the double armed bolt C with the valve V, as described, whereby it is made to perform the double function of securing the valve to its seat, and also of operating said valve, the arrangement being as set forth.

No. 18,101.—WILLIAM MEYER, of Progress, N. J.—*Improvement in Shower Bath Apparatus.*—Patent dated September 1, 1857.—The nature of this invention will be understood by reference to the claim and engravings.

Claim.—The lower rose, by means of which water can be thrown upwards, and a more perfect and thorough shower bath is obtained.

No. 17,102.—LOUIS LEFEBVRE, of New Orleans, La.—*Improvement in Bathing Apparatus.*—Patent dated April 21, 1857.—The boiler A is divided into two compartments, the division A serving for generating steam or medicated substances, while the compartment B is to produce the gases of any corrosive materials desired. The products of the two divisions of the boiler are permitted to pass through pipe F into pipe B, and thence through the branch pipes C into pipes D, whence the gases escape through the perforations a^1, while the condensed matter passes through funnels E into pipe X, and can be drawn off by cock H. The medicated vapor, as it escapes through the perforations a^1 in pipe D, operates upon the invalid, who lies within the frame of pipes represented in figure 2, and which frame is covered with tight cover L.

Claim.—First. Providing a portable frame and casing, used to be placed over persons to administer baths without removing them from their positions, and attaching to said portable frame a graduating stop cock, provided with a reservoir *a* to receive the condensed vapors, with the handle *g* of said cock extending into the frame and beneath the casing, to enable the person taking the bath to operate the graduating cock.

Second. Perforating the pipe or reservoir from which the vapors issue into the bath on its upper side, and placing beneath it a pipe or reservoir to receive the condensation, uniting said pipes or reservoirs by funnel-shaped connexions, through which the condensed vapors may escape, as set forth.

Third. Distributing pipe B, provided with double funnels and stop cocks, for the introduction of medicated or other substances into the bath through the connecting pipe S F, substantially as set forth.

No. 17,979.—JOHN K. O'NEIL, of Kingston, N. Y.—*Improvement in Bathing Apparatus.*—Patent dated August 11, 1857.—By operating the bellows pump B, the water is forced into air vessel C, and through pipe D into ring E, and is forced out through the holes in said ring.

The inventor says: I do not claim an annular showering pipe, separately, such, or its equivalent, having been used before in other connexions.

But I *claim* the combination of the annular pipe E, or its equivalent, with the flexible connecting pipe D, or its equivalent, operating substantially in the manner and for the purpose specified.

No. 18,349.—WILLIAM MILLER, of Waltham, Mass.—*Improvement in Appendages to Shower Baths.*—Patent dated October 6, 1857.—The nature of this improvement consists in combining with the bath a brush and machine for operating the same, in order that a person

while within the standing chamber of the bath, and the said brush is in motion, may bring his or her back or other part of the body in contact with the brush so as to have the part cleansed or brushed. To accomplish the object of this invention, there is arranged within the standing chamber *a*, of shower bath A, a brush B, affixed to a vertical slide rod *c* by means of a set screw, the brush being movable on the slide rod so as to be capable of being adjusted in any position. By laying hold of and revolving the crank E, a reciprocating motion will be given to the brush (attached to the slide, as shown in the drawing) so that any part of the body in contact with it may be brushed or cleansed.

The inventor *claims* combining with a shower bath a brush, and mechanism to impart to the said brush movements, whereby a person while in the bath may have his back or other part of his body brushed or cleaned, substantially as specified.

No. 17,356.—ALANSON ABBÉ, of Boston, Mass.—*Improvement in Spinal Corsets.*—Patent dated May 26, 1857.—This corset is made similar to a lady's corset, but the back portion of it, represented in the engraving, is provided with springs *a l d* bent in a serpentine form, extending laterally and longitudinally through said back portion of the corset. When this corset is applied to the body of a person, the springs will be strained up so as to produce a constant strain on the muscles of the back in such a manner as to tend to straighten the curved parts of the spine.

Claim.—The improved manufacture of corset for the cure of spinal deflections, the same being made with counteracting springs, constructed and arranged laterally and longitudinally in the back portion thereof, substantially as specified.

No. 16,822.—BENJAMIN T. BABBITT, of New York, N. Y.—*Improvement in Enema-giving Apparatus.*—Patent dated March 17, 1857.—The inventor says: I do not claim, in the abstract, the employment of hydrostatic pressure to give injections.

But I *claim* the combination of the portable reservoir A, the flexible tube *c*, and the nozzle *d*, substantially as described, to form a portable apparatus for the purpose of giving enemas or injections by hydrostatic pressure.

No. 18,015.—FRANCIS H. JONES, of Federalsburg, Md.—*Improvement in Eye-Shading Apparatus.*—Patent dated August 18, 1857.—This apparatus is applied before the eyes of the wearer, the pad *b* being in contact with the face. The tube *e* serves to discharge the heated air from the tube, the light being admitted through the glass *c;* and the light can be graduated by means of the sliding cover *d*.

The inventor says: I am aware of the use of tubes in picture galleries, and also of the employment of shades above the eyes; such, therefore, I disclaim.

I *claim* the arrangement in the top of the tube of the ventilator *e* and light-graduating contrivance *c d*, when the tube is designed for use as stated.

No. 17,107.—J. A. McClelland, of Louisville, Ky.—*Improvement in Dental Forceps.*—Patent dated April 21, 1857.—The position of the handle *c* of this instrument can be changed, as represented in figures 2 and 3, by lifting pawl *d*, when handle *c* can be turned on its fulcrum pin, the projection of pawl *d* falling into one of the two recesses of the head piece *b* when said pawl is released. The beaks *g* and *h* are screwed into the head pieces, and can be lengthened or shortened by turning them in one or the other direction.

Claim.—I *claim* connecting the handles *b* to the head pieces *c c* of the instrument, by means of suitable joints and appendages, arranged in such a manner that the shape of the instrument can be so changed as to adapt it to the drawing of upper or lower teeth, substantially as set forth.

I am aware that beaks of different sizes have been fitted to a dental forcep in such a manner that one beak can readily take the place of another; and therefore I do not claim this.

But I claim combining the beaks with a dental forcep in such a manner that their length can be increased to any desirable extent, substantially in the manner set forth.

No. 18,021.—William Selpho, of New York, N. Y.—*Improvement in the Construction of Artificial Hands.*—Patent dated August 18, 1857.—The spiral spring *i* draws the fingers *f* constantly towards the thumb *d*, and retains any article placed within the hand and between the thumb and the fingers. The artificial hand may be opened by a motion of the opposite shoulder drawing on the shoulder strap *m* and cord K, or by extending the artificial hand and arm.

The inventor says: I am aware that the fingers of artificial hands have been opened by a motion derived from pressure of the arm or stump against the person, and also that the hand has been closed by a spring; therefore I do not claim the same.

But I *claim* constructing the skeleton fingers on the metallic cross pipe *g*, set in eyes in the line of the knuckle of the hand and provided with the contractible spring acting on one side of said pipe, to close the hand, substantially as specified.

2d. I claim opening the artificial hand on one arm by a motion derived from the shoulder of the other arm of the wearer, said motion acting through the shoulder loop *l*, strap *m*, and cord K, or their equivalents, substantially as specified.

No. 18,020.—John C. Schooley, of Cincinnati, O.—*Improvement in Inhaling Apparatus.*—Patent dated August 18, 1857.—The atmospheric air enters the inhaler through passage *b*, and depositing its moisture on the ice in box A, escapes through passage *e*, and can be inhaled by the patient through mouth-piece *g*.

The inventor says: I am aware that inhalators have heretofore been made and used with ingress and openings, also a tube through which to inhale.

I also am aware that inhalators have been heretofore used from which to inhale gas, vapor, &c., but in no case have I ever known

them to contain ice, or its equivalent, over which air was passed and then inhaled.

I disclaim the use of the ingress and egress openings separately from the ice receptacle. I also disclaim the use of an inhalator for the purpose of inhaling from it any kind of gas or vapor.

But I *claim* so combining the ice receptacle A with the openings *b* and *c*, and so arranged that the outside atmosphere, after being cooled and dried by passing over ice, or its equivalent, within said receptacle, can be inhaled into the lungs in the manner and for the purposes substantially as set forth.

No. 16,479.—JAMES W. W. GORDON, of Catonsville, Md.—*Spring Lancet.*—Patent dated January 27, 1857.—The nature of this invention consists in so providing a spring lancet with a shield *a a* that a certainty of depth in the incision shall be secured.

Claim.—Providing the ordinary spring lancet with a sliding shield *a a*, having a movement from side to side, in the manner and for the purposes set forth.

No. 17,994.—JEFFERSON T. MARTIN, administrator of the estate of WILLIAM PARKINSON, deceased, late of Marshall county, Va.—*Improvement in Spring Lancets.*—Patent dated August 11, 1857.—The blade E is thrown out through sheath G by the action of the main spring A, and is instantly drawn back by the reaction spring B.

Claim.—The application and adjustment of the spring B, being the reaction spring by which the blade is instantly drawn back, by which safety and accuracy are attained in bleeding.

No. 16,360.—BENJAMIN W. JEWETT, of Gilford, N. H.—*Improvement in Artificial Legs.*—Patent dated January 6, 1857.—This invention is an improvement on Palmer's leg. In Palmer's artificial leg, the leg overlaps the foot behind, and the foot the leg before; and in that leg there is an opening in the top of the foot which allows the dirt and perspiration access to the spring in the foot. By constructing it as illustrated by the claims and engravings, there is no inconvenience from this source.

Claim.—I do not claim the tendo Achilles J. But I *claim*, first, the spiral D in combination with the rod K, hook L, and cross brace *o*.

Second. The method of attaching the tendo Achillis and the cord N to the thigh by the use of the pins *v* and W.

Third. The bolts G and T, in combination with the straps and their metallic boxes, all for the purposes specified and operating substantially in the manner as before set forth.

No. 16,420.—O. D. WILCOX.—*Improvement in Artificial Legs.*—Patent dated January 13, 1857.—The elastic straps H and I operate similar to the muscles of the natural limb, and they also terminate in tendons. When the knee is thrown forward, as in walking, the forward muscle H over the knee is extended, which, through its tendon and half circle *b*, raises the foot by turning it on pivot *d*, so that it will clear the

ground, and at the same time throws the leg and foot forward. But before it comes forward to its place, the back muscle I is stretched, and being stronger than muscle H, it stops the motion of the foot, raising the heel, and bringing it right down to fit an ordinary surface.

Claim.—The artificial elastic muscles with their conjoined tendons running from the thigh to the foot, as described, to effect and control the motions of the leg and foot in cases of amputation at the knee and below it.

No. 17,888.—R. H. NICHOLAS and DOUGLAS BLY, of Rochester, N. Y.—*Improvement in Artificial Legs.*—Patent dated July 28, 1857.—The object of this improvement is to give to the foot lateral play when stepping upon an inequality of the ground.

Claim.—The use of the ball B in the manner described, the two sections of the limb being held together in the manner set forth.

No. 17,262.—OLIVER R. CHASE, of Boston, Mass., and SILAS E. CHASE, of Charlestown, Mass.—*Improvement in Machines for Making Lozenges.*—Patent dated May 12, 1857.—The mass of lozenge paste is placed upon the apron C, and passes between the two series of rollers D E and F G, and is carried, by the endless aprons K and L, upon the conveyor O, where it passes to the stamping cylinder P. Striker S, on rock shaft h^2, first strikes the paste into the cylindrical cutters x, and, passing to the elastic roller T, the latter finishes the surfaces of the lozenges, while the waste paste is scraped off the cylinder P by means of clearers d^1, which are thrown outward from the cylinder as soon as the studs h^1 have passed beyond the ends n^1 of the curved bars i^1, and the scrapings are discharged to the apron Q. The further motion of cylinder P sets bars a^1 free, and the springs C^1 cause the pistons y to discharge the lozenges from the cutters x, and to drop to the apron R.

Claim.—The combination of the reducing rollers F G, the directing and gauging rollers D E, the endless aprons K L, and the sugar receptacles formed by the endless aprons, the two rollers D E, and the side plates or timbers of the frame A, the whole being for the purpose of reducing the dough or mass of paste to an equal thickness, and applying strata of powdered sugar or material to its flat surfaces, as described.

Also, the striker and its operative mechanism, as combined with the cylinder P, and made to operate in connexion therewith, essentially in manner as specified, not meaning to claim a roller as combined with the cylinder for simply forcing the dough into the cutters by pressure, but a contrivance like the striker, which forces the dough into the cutters, and the latter through the dough by a blow or percussion, as described.

And, in combination with the cylinder of cutters and the striker, a flexible or elastic roller T, as applied and used as specified, and for the purpose of finishing the surfaces and edges of the lozenges after the action of the striker has taken place.

And, in combination with the rotary series of cutters, pistons, and

scrap clearers, and their operative mechanism, the two endless aprons Q and R, for respectively receiving the waste or scraps and the lozenges, and conveying them out of the machine, substantially in the manner as specified.

No. 17,095.—A. GRANDISON HULL, of New York, N. Y.—*Means for Inhaling Medicinal Agents.*—Patent dated April 21, 1857.—The bottles *b* and *c* are filled with any suitable medicated liquid to about the height indicated in the engraving, and a galvanic current is created between said fluids, imparting to them a certain electrical property. If the nature of the disease be such as to require a supply of positive electricity, the pipe *k* in the bottle containing the positive pole should be breathed through, which draws off from said bottle vapors or gases surcharged with positive electricity; and if negative electricity be required, the opposite bottle is made use of.

Claim.—The means of inhaling gases, vapors, and medicines, treated in the manner substantially as set forth, or in any other equivalent manner.

No. 16,361.—ORWELL H. NEEDHAM, of New York, N. Y.—*Improvement in Milking Shields.*—Patent dated January 6, 1857.—When this shield is applied to the breast, the nipple, shown by dotted lines, fills the interior of the ring A; and as the infant sucks the mouth-piece B, and extracts the air therefrom, the lining *a* will be forced inward, by the external pressure of the air, through the passages *b*, and the nipple will be compressed laterally every time the air is extracted from the mouth-piece.

Claim.—Combining the perforated band or ring A, or its equivalent, with the yielding lining *a*, in the manner substantially as described, whereby an inward pressure against the teat or nipple is produced, the point of said pressure being changeable at pleasure, as set forth.

No. 16,396.—JAMES PARKER, of Boston, Mass.—*Improvement in Nipple Shields.*—Patent dated January 13, 1857.—The nature of this invention will be understood by reference to the claim and engraving.

The inventor says: I do not claim a nipple shield so constructed that when worn on the breast of a person it will entirely cover the nipple thereof.

Nor do I claim one made with a small air hole in its front end, or that part covering the end of the nipple.

But I *claim* my improved nipple shield, constructed with a tubular cap, as described, viz: one which shall only encompass the nipple on its sides, and not cover the front or end thereof, the whole front of the nipple guard being open, as specified.

No. 17,195.—J. H. HOBART BURGE and WILLIAM J. BURGE, of Brooklyn, New York.—*Improvement in Surgical Splint Apparatus.*—Patent dated May 5, 1857.—The fractured limb of the invalid, stretched upon mattress B, can be extended by turning handle O, to which hook Q is attached by means of a swivel. The rod V serves to support the limb by means of straps or belts suspended to it, which pass around

and support the limb. By turning the screws K L, the corresponding pads can be made to bear against the thighs of the patient in case of a fractured thigh.

Claim.—First. The combination of the pad straps R R with the platform D and rod S, which combination is intended to confine the counter extending pressure as much as possible to the tuberosities of the ischia.

Second. The rod U, as a means of supporting the fractured limb, only in connexion with the employment of extension and counter extension.

No. 16,680.—Erastus T. Bussell, of Shelbyville, Indiana.—*Improved Cauterizing Syringe.*—Patent dated February 24, 1857.—This instrument, self-adjusting in its operation when introduced into the vagina, is to enable females to effectually apply remedies in impalpable powder for the removal of certain diseases.

Claim.—The combination of hollow plunger B with cauterizing rod C encased, and divergent spring fingers *a* with absorbent bulbous extremities *b*, all connected with cylindrical tube A, substantially as set forth and for the purposes specified.

No. 16,956.—Charles H. Davidson, of Charlestown, Massachusetts, and Herman E. Davidson, of Gloucester, Massachusetts, assignors to Charles H. Davidson, of the same place.—*Improved Enema Syringe.*—Patent dated March 31, 1857.—The operation of this instrument is as follows: The end of the eduction pipe I is immersed in the enema, and the bulb is then compressed by hand, which operation will expel the air from within; by then releasing the grasp of the hand, the bulb A will recover its form, and the partial vacuum thus formed will be filled by the enema. By now inserting the injection pipe H, and repeating the operation of compressing bulb A, the required quantity can be administered.

Claim.—The combination of the prolate spheroidal-shaped elastic sack with flexible tubes terminating in valve boxes E F, containing valves *b c*, arranged for the purpose of eduction and ejection, when the sack tubes and valve boxes are in or nearly in the same axial line, the whole operating together substantially in the manner and for the purpose set forth.

No. 17,000.—William Somerville, of Buffalo, N. Y.—*Improvement in Veterinary Syringes.*—Patent dated April 7, 1857.—The dose of medicine having been introduced into the syringe, the plunger C is fastened back by hooking catch H upon the end of the body of the syringe; the syringe is then introduced into the mouth of the animal, and, when placed in proper position, the surgeon presses his thumb against catch H and releases it, when spring G will force the medicine into the throat of the animal.

Claim.—Providing the syringe with the spring and catch described, or their equivalents, in the manner and for the purpose set forth.

No. 16,433.—ALFRED A. BLANDY, of Baltimore, Md.—*Improvement in Artificial Teeth.*—Patent dated January 20, 1857.—A channel *a* runs vertically through the tooth, and a wire is inserted in said channel, projecting through it at either end, and which, upon the metal being poured over the casting, secures the connexion of the tooth with the plate. The outer end of the pin may be afterwards fused to make it a headed bolt.

Claim.—Constructing artificial teeth with a hole *a* passing vertically through them, for the reception of the molten metal, and with a neck *b* and projecting sides, in the manner and for the purposes set forth.

No. 16,482.—GEORGE E. HAYES, of Buffalo, N. Y.—*Mounting of Artificial Teeth.*—Patent dated January 27, 1857.—This invention relates to a certain method of applying the platina connexions, by which the artificial teeth are applied to the plate and retained in place. All the parts of the teeth and gums are represented of the natural shape and proportions, and the work has greater power of resistance for mastication, &c.

The inventor says: I do not claim the continuous gum body, nor do I claim the mounting of teeth on a wire frame, when that is used otherwise than described; neither do I claim the soldering of a wire from one pivot to another, when such pivots are arranged along the alveolar ridge, as that was done by Delabarre.

I *claim* providing the teeth severally with a groove *b* in the base, for the purpose of receiving a wire frame C, or its equivalent, with a wire or wires A A projecting from the base on each side of the said groove, for the purpose of serving as connexions with the plate and with the wire frame, substantially as specified, thereby enabling the natural crown to be represented on both sides of the tooth, and dispensing with the ordinary backing.

And I also claim the attachment of the teeth to a wire frame *c*, when the said frame is employed, in addition to a direct connexion with the plate, and stayed to the plate by stays *f f*, substantially as described, to give additional stability and security to the teeth.

No. 16,708.—ALFRED A. BLANDY, of Baltimore, Md.—*Improvement in Casting Plates for Artificial Teeth.*—Patent dated March 3, 1857.—An impression of the mouth being obtained as usual, a cast is taken therefrom, which subsequently forms one-half A of the moulding flask. Upon this cast a pattern plate *a b* of rolled wax is pressed to the required shape, and a rim *c* of wax placed upon the alveolar ridge of the same; the same operation is repeated for the lower jaw. The two plates, with the wax rims, are then introduced into the mouth, and the wax trimmed until the two rims touch at all points. The two plates, while thus in the mouth, are so marked upon their wax rims, that, when withdrawn, they may be replaced in precisely the same relation; the double cast or articulator is then formed upon them, preparatory to the arrangement of the teeth upon the rim of wax *c*, which will require the partial or complete removal of the rim *c*, the plates being held meanwhile in proper position by the articulator.

Fig. 2 represents the moulding flask, with pattern plate removed, and prepared for pouring the metal.

Claim.—Moulding the plates of artificial teeth in such manner as to obtain a perfect fit to the gums, and a correct articulation of the teeth upon casting, as set forth.

No. 17,775.—THEODORE H. BRADISH and JAMES P. BRADISH, of Utica, N. Y.—*Improvement in Fastening Artificial Teeth to the Metallic Plate.*—Patent dated July 14, 1857.—The nature of this invention will be understood by reference to the claim and engravings.

The inventors say: We do not claim to be the first inventors of attaching linings or partial linings to artificial teeth at the time of manufacturing, although we are not aware that any plan for doing this has ever been brought into general use in any locality.

We are aware that a plate forming a tooth lining, with its edges turned inward to form a hold within the substance of the tooth, has been constructed, and the tooth moulded upon this plate, thus imbedding the edges, and forming a partial lined tooth. We ourselves are the assignees and owners of the right of doing this, patented to George E. Murray, December 4, 1849; but the lining in this case does not cover the whole tooth, and cannot; and by the continuous body of metal thus imbedded, the substance of the tooth is divided and weakened, and is more liable to be fractured by expansion of the metal. We do not claim this method as our invention.

But we *claim* the construction and attachment of the linings in the manufacture of artificial teeth by raising upon the back of the linings one or more series of separate anchors or projections, being so formed that these anchors or projections, when imbedded into the plastic material of the tooth at the time of its moulding, shall constitute the solid tooth and lining combined, as described.

No. 16,784.—ALFRED A. BLANDY, of Baltimore, Md.—*Improvement in Casting Plates for Artificial Teeth of Alloys.*—Patent dated March 10, 1857.

Claim.—Casting the plates of artificial teeth of an alloy, substantially as described, suitable for such a purpose from its chemical and physical properties, and that practically will not shrink or expand in solidifying.

No. 18,005.—MARTIN LUTHER WRIGHT, of Cleveland, Ohio.—*Improvement in Setting Porcelain Teeth.*—Patent dated August 11, 1857.—The nature of this invention will be understood by reference to the claim and engraving.

The inventor says: I do not claim the carving of full sets of teeth out of one piece of porcelain material, or half sets of teeth out of the same, nor of block work to be united to a metallic base; nor the moulding or modelling of porcelain material around porcelain teeth on a porcelain base for full sets or full half sets of teeth.

But I *claim* the making of parts of full sets or parts of half sets of teeth for either the upper or under jaw, where one or more teeth are good and permanent, and where one, two, or more may be skipped,

as seen at *e e e*, figs. 1, 2, and 3, making the whole plate and teeth of one piece of porcelain, in the manner described.

No. 18,708.—J. W. Riggs, of Plainfield, N. J.—*Improvement in Trusses.*—Patent dated November 24, 1857.—This invention consists in constructing the pad of a truss of a series of balls or knobs, or in any way making it with a series of knobs or protuberances on its face, the number of such balls, knobs, or protuberances, and their arrangement, being such as to cause the force of the truss spring to be exerted at several distinct points or intervals around and along both sides or margins of the inguinal canal and abdominal ring.

Claim.—The construction of a pad, with a knobbed or noduled face, substantially as described, so that it shall press upon several distinct points or intervals around and upon the tissues concerned in hernia, and not have a continuous bearing, and operate as set forth.

No 16,497.—Samuel S. Ritter, of Philadelphia, Pa.—*Improvement in Hernial Trusses.*—Patent dated January 27, 1857.—The nature of this invention consists in constructing the truss of a straight spring A, to be bent around the front of the wearer by a belt B enclosing it, to which spring the pad P is so attached as to have an elastic bearing against the body by means of the springs *f f*.

Fig. 1 represents a view of inside of truss, with pad lifted.

Fig. 2 is a section of truss, showing pad in position for use.

Claim.—The combination of the springs A and *f* with the pad attachment, substantially as and for the purposes set forth.

No. 16,835.—Ancil I. Hardin, of Shelby, N. C.—*Improvement in Hernial Trusses.*—Patent dated March 17, 1857.—Attached to plate F is a lever H, by which the springs G and G may be freed from ratch D, so as to diminish at will the pressure or support made by plate F. When it may be desired to diminish the pressure or take off the supporter by lever H, springs G and G may be raised from ratch D, plate F revolved upward, the buttoning or tying of C with C loosened, and the supporter taken off.

Claim.—The position and application of the lever H, in the manner and for the purpose specified.

No. 17,670.—W. E. Cooke, of Philadelphia, Pa.—*Improvement in Uterine Supporters.*—Patent dated June 30, 1857.—The pessary F can be adjusted on its stem *z* by means of screw 2 and nut 3; and the helical spring 5 allows the ball to yield in bending the body or stooping.

The inventor says: I do not claim the pivoting of the bars B B and E E together at the points *c r*.

But I *claim*, 1st. The manner of uniting the bars B B and E E to each other and to their pads respectively, through the intervention of the side or hip bars C C, so that the truss and supporter may not only be adjustable, but also self-adjusting to the person or body of the wearer, as set forth.

I also claim, in combination with the front pad A, an adjustable pessary, made and operating substantially in manner set forth.

No. 16,478.—JAMES W. W. GORDON, of Catonsville, Md.—*Vaccinating Instrument.*—Patent dated January 27, 1857.—Having charged the cup *a* on the perforator rod with the liquid matter, the arm and rod D are drawn back from the tensor E; the tensor is then pressed with its face in contact with the flesh of the subject, and the spring is liberated by pressing on the trigger F; the arm C being forced forward, the perforator rod D is driven into the flesh, and the virus deposited.

Claim.—The application of the cup-shaped perforator rod D to the ordinary spring lancet, in the manner and for the purposes set forth.

XXI.—WEARING APPAREL.

No. 17,725.—WILLIAM CHICKEN, of Boston, Mass.—*Improvement in Instruments for Cutting Button Holes.*—Patent dated July 7, 1857.—In operating with this button hole cutter, the point of the piercer A is placed against that part of the cloth where one terminus of the button hole is to be formed; the piercer is next forced through the cloth until one end of the gauge B is brought up against the cloth.

Claim.—My improved button hole cutter, constructed substantially as described.

No. 18,014.—JARED O. M. INGERSOLL, of Ithaca, N. Y.—*Improvement in Manufacturing Metal Buttons.*—Patent dated August 18, 1857.—The buttons may be fastened to garments by pressing the points *a* through the cloth, and bending them firmly down upon the garment.

Claim.—The manner of securing the points to and through the button, by passing said points, when bent, through openings in the collet of such buttons, and fastening said points and collet securely in place by pressure, substantially in the manner and for the purpose set forth.

No. 16,909.—JOHN P. DERBY, of Boston, Mass.—*Improvement in Sleeve Buttons.*—Patent dated March 31, 1857.—By depressing the arm P, the cross plate L can be inserted in the button hole of the wristband; and by then drawing it up until the other button hole is brought under the end of arm P, the said arm can be entered into the hole by depressing lever V, which movement will cause the arm P to turn on its hinge R, and to come against the plate L, thereby securing the wristband.

Claim.—I do not claim the movable arm P, or the joint by which it is attached to the fastener, as I am aware that the eye of a button or

clasp has been constructed with a movable part which opened inward; such forms no part of my invention.

But I *claim* the lever V, which is used by increasing the distance between the joint R and the face plate K, by the means of a post S, so shaped that the arm P can be raised and depressed, substantially as described; said arrangement allowing the fastener to be entirely operated from the face side in securing it to and detaching it from the wristbands.

No. 17,082.—ALEXANDER DOUGLAS, of New York, N. Y.—*Improvement in Bustles.*—Patent dated April 21, 1857.—The nature of this invention will be understood by reference to the claim and engraving.

Claim.—The combination of the elastic strips A, the steadying cloth B, or its equivalent, provided with straps or fastenings D, and the adjusting cord C, substantially as described and for the purpose specified.

No. 18,958.—SIMEON CORLEY, of Lexington, South Carolina.—*Improvement in Instruments for Draughting Coats.*—Patent dated December 29, 1857.—This invention consists of two principal parts, the first of which is a hoop or band A of thin steel or other metal plate, the object of which is to obtain the exact measurement of what is known to tailors as "the scye," and to apply the same to cloth. This hoop is so constructed that its circumference can be contracted or enlarged at pleasure, and it is provided with a slide B, fitted with a set screw *b*, which serves to secure it at any circumference.

The other principal part of the instrument consists of a triangle D E F of thin steel plate or other material, in which sufficient strength and flexibility are combined with an extending arm D^1, forming a continuation of the longest side D. The side D and arm D^1 combined is made of a length sufficient to extend from the waist upwards in front of the shoulder, and over the shoulder as far as the middle of the back, of any one being measured.

The inventor says: I do not claim the invention of any of the measurements obtained by my instruments.

Nor do I claim, separately considered, the employment of a hoop or ring for obtaining measurements, and applying the same to the cloth.

But I *claim* the triangle D E F, having an arm D^1, combined with the hoop or ring A, substantially as described for the purposes set forth.

No. 16,859.—THOMAS L. CALKINS, assignor to Himself and JEREMY W. BLISS, both of Hartford, Connecticut.—*Improvement in Combs.*—Patent dated March 17, 1857.—In the illustrations, A, in fig. 1, shows a comb of the ordinary construction, with the improvement attached. B is the sheath made by bending the metal in such a manner as to be adapted to the shape and thickness of the comb; also having apertures made or cut in the edge in the same manner and with similar tools by which the teeth of combs are cut; and also having crozings formed on the edges of the metal, so that when the teeth of the comb are admitted through the apertures the crozings will come together

and allow the clasp C to be slid on one end over the crozings, and then applying or turning down the end of the clasp so as to prevent it from slipping off; thus allowing the sheath to move back and forth nearly or quite up to the edge or end of the tooth on the other side.

The inventor says: I *claim* the use of the sheath, substantially as and for the purpose set forth and described.

No. 17,416.—JEREMY W. BLISS, of Hartford, Conn.—*Improvement in Fastenings for Garments.*—Patent dated June 2, 1857.—The nature of this invention will be understood by reference to the claim and engravings.

Claim.—I am aware that narrow, flat hooks have been soldered on the plates used for belts and other purposes, hooking into holes or eyes prepared for them.

Also, that wire pins have been secured on ornaments having blunt ends, so that, by pricking holes through any article to which it is desirable they shall be attached, the said pins may pass through and be fastened thereto by bending the pins down; all such arrangements I do not claim.

I *claim* the new manufacture of fastening for garments described, to wit: a plain or ornamental plate or bar A, having sharp hooks B permanently fastened to it, pointing towards each other or towards the centre, so arranged as to be conveniently hooked into the garments to be fastened, or unhooked therefrom.

No. 17,103.—MARK M. LEWIS, of Albany, New York.—*Improvement in Instruments for Curling Hair.*—Patent dated April 21, 1857.—The nature of this invention will be understood by reference to the claim and engraving.

Claim.—The construction of a hair-curling instrument by the combination of a taper-formed tube with a comb, which can, by a spring or equivalent apparatus, be made to project from the surface of the tube, or withdrawn into the interior, substantially as set forth and described.

No. 16,640.—JOHN P. DERBY of South Reading, Mass.—*Improvement in Bosom Pins.*—Patent dated February 17, 1857.

The inventor says: Being aware that brooches or ornaments having the retaining pin hang so as to turn on a line parallel with the back of brooch have been used and patented by one Taylor, in England, and also being aware that the guard B has before been used for certain purposes, I do not claim that mode of attaching the pin, neither do I claim the guard B; but, as an improvement thereon,

I *claim* extending the arm *d* around the end and along the side of back of brooch, so that the point of the pin being retained in the fingers can be entered under its extreme end, thus allowing said point to be protected by a guard when revolved to place.

I also claim the combination of collar *f* with the cap *n* and the post *k*, which admits of the easy attachment of the pin *c*.

No. 17,857.—J. HEILMANN, of New York, N. Y., assignor to IGNATIUS STURNN, of the same place.—*Improvement in Diaper Pins.*—Patent

dated July 21, 1857.—The nature of this invention will be understood by reference to the claim and engravings.

Claim.—The tube A, having the slide B fitted within it, the slide being attached to one end of the tube A by a spring *b* formed of India rubber or other suitable material, and the hook C attached to the slide *b*, the tube A being slotted longitudinally, and the parts arranged substantially for the purpose set forth.

No. 17,225.—George R. McIlroy, of Covington, Kentucky.—*Improvement in Pocket Safes or Fastenings.*—Patent dated May 5, 1857.—To lock the pocket by means of this fastening, the button C attached to the coat is inserted in the hole B and pressed down over cam *c*, pushing aside said cam by reason of its yielding arm *b*, when the shank of pin C is locked between cam C and the springs A. The fastening is unlocked by pulling cord *e*, and the projections on rod *d* will bend aside springs *b* and cams *c* so as to clear the shank of the button, which then can be withdrawn from hole B.

Claim.—Holding the shank of the button between the horizontal spring *a* and the cam *c*, on the vertical spring, so that by drawing and letting go the rod *d* the said shank will be raised up by the horizontal spring, and the cam passing under it throw it out of the hasp part, as set forth; and this I claim, whether one, two, or more buttons be used, so long as the series is thrown out by one operation of the rod, as described.

No. 17,573.—Horace Harris, of Newark, N. J.—*Improvement in Safety Pockets.*—Patent dated June 16, 1857.—The chains *h* are secured within the lining of the garment and are for the purpose of preventing the pocket from being cut out. The pocket can be opened by pulling chain F, which will withdraw clasp D from wire C; and the pocket is shut by the simple pressure on it which will bring wire C within clasp D; the spring E serving to press said clasp on the two wires which constitute the mouth frame of the pocket.

The inventor says: I am aware that Joseph Cotton has a patent for spring bolt and catch for fastening plates connected with pockets I do not use or claim any of his devices.

I *claim* the wire frame, with the spring C, for throwing it open, constructed in the manner described.

No. 16,583.—Edward K. Godfrey, of New York, N. Y.—*Improvement in Razor Strops.*—Patent dated February 10, 1857.—The backs F and G of the strop B serve not only as a means for supporting the strop and convenience of handling it when being used, but also as a protection or case which fits the curved faces of the strop.

Claim.—The use of an independent strop stock, without handles, in combination with adjustable and independent backs, substantially for the purposes set forth.

No. 16,533.—John P. Derby, of Cavendish, Vt.—*Improvement in Shirt Bosom Studs.*—Patent dated February 3, 1857.—For inserting the stud, the side *e* is depressed, as represented by dotted lines in fig. 2; for removing the stud, the other side *b* is pressed into the position represented by broken lines.

The inventor says: I do not claim the use of a single coil of wire with a single lock for the purpose of securing the stud to the bosom, as that is well known.

I *claim* the side pieces *b* and *e*, passing the one above and the other beneath the cross piece *d*, forming a double coil and double lock, operating in the manner and for the purpose substantially as set forth.

No. 17,241.—HELEN C. TRAPHAGEN, of New York, N. Y.—*Improvement in "Ladies' Skirts."*—Patent dated May 5, 1857.—The nature of this invention will be understood by reference to the claim and engraving.

Claim.—The attachment of a series of air-tight tubes to the body of a skirt or petticoat, to expand and set out the skirt when the said tubes are filled with air, as and for the purposes set forth.

No. 17,602.—EDWARD F. WOODWARD, of Brooklyn, N. Y.—*Improvement in Ladies' Skirts.*—Patent dated June 16, 1857.—This invention consists in the employment of a pad, which is stiffened by having a spiral stiffener of rattan wound around it; the pad may consist of rattan shavings or hemp. The spiral stiffener is saturated with gum shellac, to increase its stiffness and durability.

Claim.—The employment of the spiral stiffener or cord for stiffening ladies' skirts, &c., together with the saturation thereof in the manner set forth, and for the purposes specified.

No. 18,013.—CHARLES S. GOODMAN, of Washington, D. C.—*Improvement in Hoops for Ladies' Skirts.*—Patent dated August 18, 1857.—The nature of this invention will be understood by reference to the claim and engraving.

Claim.—Constructing the hoop of spools or tubes strung upon an elastic cord, or its equivalent, to give elasticity to the hoop, with the ends of the spools cut on a line radiating to the centre of the hoop, whether the same be made of wood or any other substance to produce the same effect; the whole being arranged substantially in the manner and for the purposes specified.

No. 18,247.—DAVID C. PEACOCK, of Brooklyn, N. Y.—*Sleeve-Fastener.*—Patent dated September 22, 1857.—The claim and drawings explain the nature of this invention.

The inventor says: I *claim* the construction of a sleeve button secured by a bar affixed thereto at one end by a joint or hinge, passing through holes in the sleeve, and being secured or fastened at the end opposite to the affixed end, in the manner set forth and described.

No. 17,413.—WILLIAM A. BATES, of Boston, Massachusetts.—*Improvement in Sleeve Fasteners.*—Patent dated June 2, 1857.—In using this sleeve fastener, the tongue *e* is to be passed through the sleeve, when, by a slight contraction of the body A, the catch *c* can be passed into the opening of the slotted tongue *e*.

The inventor says: I do not claim forming a sleeve fastener by means of hinged spring arms, a slot, and ears, as patented by Farr &

Thompson, assignees of John Mansure; my invention differing materially therefrom, and having important advantages over the same.

Nor do I claim in buttons or fastenings for clothes having one end of the eye or tongue, hinged or rigidly fastened to the button, and making the tongue or eye elastic, and forming a cavity or countersink in the body, to facilitate the entrance of the tongue or eye into its hole in the body, such being the subject of a patent granted to Richard Oliver, October 10, 1854. My invention differs from this—the body in my clasp being made so as to spring longitudinally.

I *claim* my improved bracelet clasp, made with a slotted tongue and catch hook, and with its body to spring lengthwise, as described.

No. 17,345.—WILLIAM VOGT & JOHN J. KLINK, of Louisville, Kentucky.—*Shirt Stud or Button.*—Patent dated May 19, 1857.—In using this stud, the button A is held with its bar B running in the same direction as the button hole, and one end of the bar B is inserted and slid down as far as the shank of the bar will permit; the other half of the bar B is then inserted, and the stud is turned a quarter round, and the hook C secured in the button hole.

Claim.—Shirt studs or buttons, sleeve buttons, breastpins, or any other article of jewelry or ornament, made with the bar B and the hook C, for the purpose and in the manner substantially as described.

No. 16,328.—J. PERLEY DERBY, of Boston, Massachusetts.—*Improvement in Bosom Studs.*—Patent dated January 6, 1857.

The slide H, together with stem B of stud A, is inserted in the button hole of the garment, the slide and stud being in the position of fig. 1; the stem and stud are then moved towards the centre of the slide H, the springs S bearing against the stem B, until the edges of said stem drop into the recesses P of springs S, as represented in fig. 2, the article being then secured in its place.

Claim.—A stem, to which is attached a slide, constructed with a slot and spring in the arms, substantially in the manner described, which, on being inserted through the holes of the garment which it is intended to secure—be it shirt bosom or other parts of the apparel—can be moved or pushed as far as required, and there secured by the force of the spring named.

No. 16,872.—JOHN P. DERBY, of Cavendish, Vermont.—*Improvement in Shirt Studs.*—Patent dated March 24, 1857.

a is the stud; *c* a flat coil, which is slightly widened at the point *d* where it is secured to the stud. This portion of the coil rests in the long slit or button hole made to receive it, and thus the stud is prevented from turning when in place. At *i* the coil rises, as seen in the engraving, and immediately descends again, as at *f*; the portion *f* forming a shoulder or offset, which rests against the back of the bosom, and prevents the coil from being disengaged from its hole.

The inventor says: I do not claim securing studs to the bosoms of shirts by means of a coil of wire; as this is not new, and forms no part of my present invention.

But I do *claim* widening the wire at its base, for the purpose of preventing the stud from turning in the shirt, as set forth.

Secondly. I claim the offset *f* in the coil, for the purpose of preventing the disengagement and loss of the stud.

No. 17,060.—Dutee Wilcox, of Providence, Rhode Island.—*Improvement in Shirt Studs.*—Patent dated April 14, 1857.

To insert this stud in the eyelet hole of a shirt bosom, the levers C and D must be in the position represented in fig. 1. In this position the levers are inserted until plate A is forced up against the material; by then pressing disk B and slide E inward, the arms C and D are turned on their fulcra *a* into positions of fig. 2. In removing this stud, the disk B is withdrawn, and slide E forces levers C and D back in position, fig. 1, when the stud can readily be withdrawn from the eyelet hole.

Claim.—My improved stud, as constructed with the arrangement and application of a slide bolt E, with respect to the disk B; and the two arms turning on separate fulcra, and so as to operate therewith, and be operated as described.

Also, so constructing and arranging the disk B of the slider E that its periphery shall extend or lap beyond that of the disk A, in manner, and so as not only to cover the said disk when closed down upon it, but also to enable a person to grasp the said disk B between his thumb and finger without at the same time grasping the disk A.

Also, forming the two levers with recesses in their heels, so that they may readily lap over and pass by one another, without interference, while being turned on their respective fulcra, and the heels be brought close up to the locking slide to enable it to lock them, as set forth.

No. 16,472.—Lyman Derby, of New York, N. Y.—*Improvement in Tailors' Measures.*—Patent dated January 27, 1857.

The nature of this invention will be understood by reference to the claim and engraving.

Claim.—The arrangement of the graduated rules for giving the outlines of the back and front of a coat, when said back and front rules are suspended upon the jointed rule A A^1, substantially in the manner and for the purposes specified.

No. 17,600.—James Willis, of London, England.—*Improvement in Umbrellas and Parasols.*—Patent dated June 16, 1857.

The nature of this invention will be understood by reference to the claim and engravings.

The inventor says: I *claim* my manufacture of the runner and slider and top joint collar, as made with its notched flange of drawn or rolled metal, bent into a ring, and constructed in manner and applied thereto substantially as described.

I do not claim confining either the rib or the spreader of an umbrella frame to its grooved notched ring or flange of the slider or top ring by means of a circular wire.

Nor do I claim confining said wire in place by twisting its ends together in the usual way.

But I claim my method of confining the wire in the flange *x*, viz: by means of a flange made tubular or with a groove and space formed to admit and receive the circular split ring of wire, as described, and bent down laterally on the ring and between the spreaders or ribs *c*, as specified; the same not only causing the wire to be grasped between each two joints of the spreaders or ribs, but providing a smooth flange without any projections likely to tear or injure the cloth cover of the umbrella.

No. 18,036.—SHELDON CANFIELD, of Derby, Connecticut.—*Improvement in Umbrellas and Parasols.*—Patent dated August 25, 1857.

The nature of this invention will be understood by reference to the claim and engravings.

Claim.—The form and construction of the clasp E, described; it being made of a single piece of thin sheet metal, so folded in the middle, either by a machine or otherwise, as to form, on the under side of the clasp, two flanges *e* and *f*, each consisting of a double thickness of the sheet metal.

The clasp, as applied to umbrellas and parasols. I claim nothing else described as my invention.

No. 18,500.—HEMAN CROSBY, Jr., of Waterbury, Connecticut.—*Improvement in Cane Umbrellas.*—Patent dated October 27, 1857.

The engravings and claim will explain the nature of this improvement.

The inventor says: I *claim* an improved cane umbrella, constructed in manner and so as to operate substantially as described; that is to say, as made so that the joint ring or collar of the ribs may slide on the rod, and the stretchers applied to the rod, and the whole made so as to be capable of being drawn out of a tubular staff or cane, unfolded, or spread out, reversed and folded, returned within the staff, as occasion may require.

No. 16,340.—L. K. SELDEN, of Haddam, Connecticut.—*Improvement in Folding Umbrellas.*—Patent dated January 6, 1857.

By the arrangement of parts as described in the claim the umbrella may be folded within a short space, and the use of the fastening for keeping the ribs distended dispensed with.

Claim.—The braces F G, connected by pivots *b*, and attached by pivots to the ribs D, stretchers E, and handle A, as shown and described, for the purpose set forth.

No. 18,445.—BENJAMIN F. GRINNELL, of New York, N. Y.—*Wristband-Fastener.*—Patent dated October 20, 1857.—A A^1 are the two ends of a wristband, furnished with the usual button hole *a* and a^1; B is the external plate or shield of the fastener; this plate is connected by means of metal strips *d* d^1 to the lower buttons *e* e^1. To the button e^1 is soldered, or otherwise secured, a

metallic spring *f*, the end of which bears against the face of the button *e*.

The inventor says: I *claim* the external plate B, with its connexions *d* and d^1 and buttons *e* and e^1, in combination with the spring *f*, the whole being constructed substantially in the manner and for the purpose specified.

XXII.—MISCELLANEOUS.

No. 18,826.—William Stoddard, of Lowell, Mass.—*Pocket-Book Alarm.*—Patent dated December 8, 1857.—The nature of this invention consists of the hook or hooks C, for both securely confining the pocket-book within the pocket, and at the same time causing an alarm if an attempt should be made to extract it by a pickpocket; also, in the stand E, relatively arranged with the spring H, for allowing an elastic but limited movement to the hook C; also, in the thumb-piece K and finger L, for setting or cocking the alarm and connecting the pocket-book to the pocket.

The inventor says: I *claim* one or more hooks C, or their equivalents, constructed, arranged, and operated essentially in the manner and for the purposes set forth.

I also claim the stand E, or its equivalent, carrying the hook C, relatively arranged with the spring H, to allow an elastic but limited movement of this stand for disengaging the alarm if an extraction of the pocket-book should be attempted by a pickpocket, essentially in the manner and for the purposes set forth.

I claim the thumb-piece K and finger L, or their equivalents, for setting or cocking the alarm, arranged and operated essentially in the manner set forth.

No. 16,942.—Marion J. Wellman, of New York, N. Y.—*Improvement in Baby-Jumpers.*—Patent dated March 31, 1857.—The springs *c* attached to the corners of the frame *a* support the cross pieces *d*, to which the straps *e* are suspended, which support the seat e^1 for the reception of the infant.

Claim.—The combination of the cross and corner springs attached to separate points of suspension at a distance from the centre, and beyond the centre of gravity, with an infant's seat, constructed, arranged, and combined in the manner and for the purposes set forth.

No. 16,862.—Joseph Thomas, of Brooklyn, assignor to Himself and Charles A. Durgin, of New York, N. Y.—*Improvement in Baby-Walkers.*—Patent dated March 17, 1857.—In using this invention the child is placed in a standing position, which may be done by raising the

"walker" over its head, and dropping it down over it until its head and arms protrude above the cushion. The "walker" is then set the right height by the adjustable legs, the strap B is secured around the child's waist, when it is free to run in any position inside the cushion, while the castors allow the "walker" to work in any direction.

The inventor says: I am aware that a circular cushion or annular table constructed in halves and hinged together, to lock the child therein, and placed upon vertical vibrating springs, has been used in the patent of Euclid Rice, of October 28, 1851; and I therefore disclaim the use of his invention.

But I *claim* the combination and arrangement of a circular cushion, having attached thereto straps, as described, for confining the child in a vertical position, and also allowing it to turn at will within the cushion, which is placed upon vertical adjustable legs, for the purpose of suiting the height of the child; whereby I am enabled to make a cheap and useful article of furniture, protecting the child from injury and assisting it in walking, substantially as specified, and for the purpose set forth.

No. 16,970.—Joel A. H. Ellis, of Springfield, Vt., assignor to Joel Woodbury, of same place.—*Improvement in the Construction of Baskets.*—Patent dated April 7, 1857.—The splints A are fastened to the bottom of the basket by inserting them between the pieces B and B^1, and by then nailing said pieces together by means of nails *a*; they are then fastened between the top hoops R and R^1, and connected to each other by means of the staples *c*.

Claim.—The described new or improved manufacture of baskets, as made of vertical splints, two bottom boards, top hoops, and staple connexions, or their equivalents, the whole being arranged and secured together substantially as specified.

I also claim the arrangement of the staple connexions, viz., so that each one shall lap on the two next adjacent to it, the same causing the fibres of the wood of the splint to be drawn together by the strain of the load of the basket.

No. 17,621.—Anthony Faas, of Philadelphia, Pa.—*Improvement in Fastening Handles to Baskets.*—Patent dated June 23, 1857.—This handle is formed by inserting a hoop down each side of a basket, passing it through the bottom of said basket, and joining both ends by a lock B.

Claim.—Basket handles as above described.

No. 18,623.—James R. Baird, of Vincennes, Ind.—*Apparatus for Ringing Bells.*—Patent dated November 17, 1857.—The engraving and claim show the nature of this invention.

The inventor says: I do not claim ringing an elevated bell from a position below it by means of a flexible or jointed frame, when said frame is attached directly to the axis on which the upper end of the tongue swings, as in the bell-ring device patented in 1852 by Thomas V. Stran.

But I *claim* the direct attachment of the circular lever C to the ball or lower end D of the tongue or clapper, and the combination of said

lever thus attached with the vibrating cross-head E and handle I, by means of the pendulous rods F F, substantially as and for the purposes set forth.

No. 17,836.—GEORGE H. HOAGLAND, of Port Jervis, N. Y.—*Improvement in Signal or Alarm Bells.*—Patent dated July 21, 1857.—The strap F; which is connected with the signal rope, is wound around the reel L, and by pulling the strap F the cams H are rotated, striking the spring I, and causing the hammer C to strike the bell A, By this same operation the spiral spring M within the reel D is wound up; and as the strap F is released, it will be rolled again around reel L for the next operation.

Claim.—The use of the cam reel D E, constructed and operated as described, or in any equivalent way, for the purpose of striking the bell for a signal or ringing continuously for alarm, substantially as described.

The combination of the said reel with the hammer and belt, for the purposes set forth.

No. 18,799.—JOHN M. BRUNSWICK, of Cincinnati, Ohio.—*Improvement in Billiard Table Cushions.*—Patent dated December 8, 1857.—*a* represents the rail attached to the table B, as usual, by means of screw bolts; and a portion of the rail that rests on the table is angled out, as usual, in which angle the cork wood *c* and rubber *d* are placed and *f f* is a piece of paper pasteboard attached to the face of the rubber cushion *d;* and *g g* is a piece of leather drawn tight around the rubber, furnished with pasteboard and cork wood, and tacked to the rail, for compressing and holding the rubber and cork firmly to its place in the rail; *h h* is a cover of cloth over the leather for protecting it, as is commonly used on all cushions.

The inventor says: I would state that I am aware that rubber, cork, and leather have been used in forming a cushion; this I do not claim.

But I *claim* the combined use of cork, rubber, pasteboard, and leather, when used in the order enumerated, by which means I produce a better cushion, as set forth.

No. 18,805.—HUGH W. COLLENDER, of New York, N. Y.—*Improvement in Billiard Table Cushions.*—Patent dated December 8, 1857.—A represents a billiard table; B is the cushion, shelf, or bed; C is the elastic block of rubber, and D the thin strip of rubber belting; the elastic block C is more than double the thickness of the rubber strip, and should be perfectly elastic. The rubber strip D, which is completely non-elastic laterally, but capable of expanding longitudinally, is placed on the front side of the rubber block, as shown, and cemented to it with rubber cement, or otherwise fastened; or the facing may be placed in a mould, and the fluid rubber poured into the same mould behind it, and the two rubbers caused to unite together by reason of the adhesive properties contained within themselves. The cushion thus made is covered with a thin woollen cloth.

The inventor says: I do not claim a cushion with a comparatively

solid face and perfectly elastic back, when formed of rubber, cork, and leather, as this was patented by M. Phelan in 1856.

But I *claim*, as a new, better, and cheaper mode of carrying out the principle involved in said cushion, the use of the two rubbers possessing the different qualities or degrees of elasticity specified; for the purpose of producing a rubber spring cushion, with a comparatively solid rubber face, and an elastic rubber back, substantially as set forth.

No. 18,841.—LEVI DECKER, of Bergen, N. J.—*Improvement in Billiard Table Cushions.*—Patent dated December 15, 1857.—The inventor, in describing his improvement, says: I make an India rubber pad A in the usual form; and against the most projecting part of the surface of that pad, designed for the action of the balls, I place a steel spring, (shown by lines,) consisting of a strip of steel—say about as thick as the mainspring of a clock, and about a half or three-quarters of an inch wide, along each cushion. I then complete the cushion by covering the whole with cloth in the usual manner.

Claim.—The combination of India rubber and a steel spring for billiard table cushions, substantially as described.

No. 16,374.—WILLIAM CAIRNS and JASPER CAIRNS, of Jersey City, N. J.—*Implement for Holding Blacking Boxes.*—Patent dated January 13, 1857.—This invention consists in securing the blacking box upon a metallic bar or handle of suitable length by means of an adjustable or sliding jaw C and two stationary projections a^1, for the purpose of preventing the fingers from becoming soiled in using said box.

The inventors say: It is very common in lathes and other machines to hold articles, both round and of other shapes, by means of adjustable clamps; and, therefore, we expressly disclaim the use of adjustable clamps for the holding of objects.

But we *claim*, in blacking box holders, the combination with a slotted handle of the stops a^1 and the adjustable jaw C, in the manner and for the purposes specified.

No. 17,431.—FRANCIS G. HARDING, of Boston, Mass.—*Improved Block for Blacking Boots and Shoes.*—Patent dated June 2, 1857.—The nature of this invention will be understood by reference to the claim and engraving.

The inventor says: I do not claim two shells in connexion with a spring and screw, irrespective of peculiarity of construction, and merely viewed as a stretching block or tree; for such devices are now used for such purposes.

I *claim* the described new article of manufacture, consisting of the thin metallic shells A and B hinged at *a*, the former having an extension *b*, to serve as a handle to the implement, and fitting the front inside of the shoe; and the latter fitting the inside of the heel, the said shells being distended, and the shoe thereby firmly held by means of the screw C passing through the shells B and abutting against the projection *c* of the shell A, in the manner and for the purpose specified.

No. 16,719.—ELIZUR E. CLARKE, of New Haven, Conn.—*Machine for Cutting Pasteboard for Boxes.*—Patent dated March 3, 1857.—The pasteboard is laid upon table K, with one edge abutting against guide L, and the other edge being held by clamp M, which latter is pressed down by spings *f*. It is then moved along through feed rollers G H, the clamp M sliding in a grooved way. The board, when passing over cylinder B, is operated upon by the cutters *a*, which may be set by means of nuts *b*, so as to cut more or less deep or altogether through the board. The cutter stocks *p* can be moved to the proper distance upon rail *c* and fixed by clamp screws.

Claim.—The method of attaching and adjusting the cutters in combination with the main cylinder, when the whole is constructed, arranged, and made to operate substantially as described.

Second. The combination of the spring clamp M with the main cylinder and cutters, when constructed and made to operate substantially as described.

No. 18,086.—HENRY N. DEGRAW, of Watervliet, N. Y.—*Improvement in Machines for Washing Bottles.*—Patent dated September 1, 1857.—The nature of this invention will be understood by reference to the claim and engravings.

The inventor says: I am aware that expanding brushes, constituted similarly to the one described, have been previously used for the same purpose; but they have been arranged in quite a complicated way, so as to preclude them from general use on account of the cost attending their construction and keeping them in repair.

I do not claim separately, or in itself considered, the expanding brush; for that, or its equivalent, has been previously used.

But I *claim* the expanding brush formed of the brush bars I J L, connected to the rod F and bar G, as shown, and expanded and contracted by the lever O and spring P, when said brush, thus arranged and operated, is used in connexion with the sliding holder R, for the purpose set forth.

No. 17,406.—DAVID COON, of Ithaca, N. Y., assignor to Himself and B. F. CHESEBOROUGH, of same place.—*Improvement in Burglars' Alarms.*—Patent dated May 26, 1857.—The screw *g* is firmly secured into the wood on the inside of the casing of the door, so as to have the barrel of the pistol towards the door; and as the door is opened, the breech of the pistol is pressed towards the stock *i*, by which motion the spring *j* is brought in operation, forcing the nipple *d* upon the plate *i* with sufficient force to cause the cap to explode.

Claim.—First. So attaching the barrel of the pistol to its stock or plate at or near the muzzle as to make a hinge joint at or near that point.

Second. The combination of a spring plate, tumbler, and barrel, by which the barrel becomes the hammer, constructed and operated substantially as described, so that when the pistol is properly fastened to the casing of the door, the barrel, being cocked, shall be at such an angle or in such a position that the door, on opening, must necessarily press upon it, and thereby discharge the pistol, the contents passing outward.

No. 18,236.—SIMEON COON, of Ithaca, N. Y.—*Improvement in Burglars' Alarms.*—Patent dated September 22, 1857.—In using this invention, the gimlet screw B being set into the door casing at proper inclination, the muzzle of barrel A will point through the opening made between the door and casing as the door opens, and at the same time the opening door will strike the hammer end of the spring E and bring it down on the nipple O, thereby discharging the piece and giving the alarm.

D is a stirrup attached to the barrel at points *m* and *n*, opposite each other, and at a distance from nipple *o* sufficient to give the spring length of stroke.

The inventor says: I *claim* combining the spring E and hammer E in one piece, and acting on a stirrup, as above described and constructed.

No. 18,292.—E. M. MIX and J. E. MIX, of Ithaca, N. Y.—*Improvement in Burglars' Alarms.*—Patent dated September 29, 1857.—This improved alarm, or pistol, may be used as an ordinary pistol, and conveniently carried in the pocket. A represents the stock of the pistol; B is the barrel; C is the cone fitted to the barrel near its breech; D is the hammer or cock, the outer end of which is divaricated and pivoted at each side of the barrel, near its muzzle, as shown at A, in figure 2. The inner end of the hammer or cock has a recess or cavity formed in it, said recess passing over the cone, when the cock falls or strikes and explodes the cap on the cone. E is the spring of the hammer or cock. This spring is formed of a flat metal bar, having its inner end attached to the under side of the barrel, near its breech, as shown at B, and its outer end bearing against the outer end or barrel of the hammer, as shown at C; the lower parts of the branched or divaricated end below and a trifle beyond the pivots are connected by a bar, against which the spring E bears or acts.

When a person deems it expedient to apply the implement to the door of his bed-room, in order to guard against burglars, the rod G is moved out from the barrel, and the outer end screwed into the door jamb, as seen in figure 3; the proper angle or position is given the barrel so that it will range clear of the jamb. As the door is opened it will come in contact with the plate F, and move the hammer, so that the spring E will move it down and explode the cap.

The inventors say: We are aware that fire-arms have been applied to doors to serve as alarms and as means of defence in cases of attempted burglary, and we do not claim broadly such application.

But we *claim* the construction of the device, as shown and described, for the purpose specified, to wit: the hammer or cock D, spring E, trigger F, and rod G, constructed, arranged, and applied to the barrel B and stock A, substantially as set forth.

No. 17,504.—BENJAMIN HINKLEY, of Troy, N. Y.—*Frame for Camp Tents.*—Patent dated June 9, 1857.—In the engraving, figure 1 represents the tent frame when expanded and ready for use, and figure 2 when folded up.

Claim.—Making the raftered frame of the tent in sections hinged together, so that the frame can be folded for convenient carrying, as described, the folding frame being provided with the jointed tie-braces F and E, or equivalent devices, for keeping the sections in place when expanded, as set forth.

No. 16,674.—ALONZO MARSHALL, assignor to BENJAMIN MARSH, of Newark, N. J.—*Varnish Can.*—Patent dated February 17, 1857.—By tilting the can forward, the small vessel B (from which the varnish for present use is to be taken) can be filled. Whatever is left in the vessel B, after the varnishing operation has been finished, can be brought back, by tilting the can backward into the air-tight vessel A that contains a larger quantity of varnish.

Claim.—Connecting the two vessels by a pipe C, in the manner and for the purpose described.

No. 18,541.—JOHN GARDNER, of Philadelphia, Pa.—*Candy Twisting Machine.*—Patent dated November 3, 1857.—In this invention, by the use of two conical rollers and a taper screw, the candy is rolled and twisted at one operation.

In the engravings, K L are two conical rollers. The journals of roller K are fitted in the plates B C. The lower journal of roller L is fitted in the plate B; but the upper journal is fitted in a plate M, which is attached to plate C by two set screws *f f*, which pass through slots in plate M into plate C. The candy, while being twisted and fed down between the rollers and screw by the rotation of the lathe, is gradually compressed, as the lower ends of the rollers and screw are nearer together than their upper ends. The roller K L and screw J all rotate in the same direction.

Claim.—The working and twisting of candy by means of a machine constructed substantially as set forth.

No. 17,163.—JOHN W. MASURY, of Brooklyn, N. Y.—*Improvement in Metallic Canisters for Putting up Paints, &c.*—Patent dated April 28, 1857.—The wire bail C passes through the ears E; and when the can A is not in use, the bail C can be shoved down, as represented in the engraving. The ears E are riveted into the can A in such a manner that they can be turned on their pins D. The cover B can be secured to the body of the can by fastening the ends H of bail C to the hooks F, by means of wires or cords G.

Claim.—The use of metallic cans for putting up paints or other substances of any known form, with ears attached thereto, through which a wire bail may be passed in such a manner as not to interfere with the packing of the cans, and to render it at once a package for transporting the paint, and a convenient and useful pot or pail out of which to use the same, with a removable cover secured to the can, in the manner and for the purposes described and represented.

No. 18,706.—HENRICH REIMANN, of Hartford, Conn.—*Machine for Making Cigar Lighters.*—Patent dated November 24, 1857.—The operation of this invention is as follows: The composition to form

the body of the cinder being placed in the receptacle C, and the igniting composition into box E, the crank M^1 is turned in the arrow shaft *k*, which is turned in the same direction, and the pulley T is rotated at regular intervals, while the pulley P has a continuous rotary motion imparted to it, it being keyed on the shaft k^1. The pulley P^1, being connected with pulley P by a chain, has an intermittent rotary motion imparted to it by the same means as pulley T. When the crank *i* is turned to its highest position, and also the press box B to its highest position, then the pulley P is just detached from shaft *f*, and consequently the press box remains in this elevated position during the next revolution of the pulley P^1. At the same moment as pulley P^1 is disconnected from shaft *f*, the pulley T is connected with shaft K, and, operating upon pulley H, the rack D is run in and out from under the press box. As rack D, together with perforated plate G, is pushed into the receptacle containing the material for the cinders, which by its own weight will settle into the holes of the plate G, at the same time the roller Q, which has been rotated by the action of pinion *r* and rack S, distributes the igniting paste to each of the ends of rods *d*, which in this elevated position of the press box protrude beneath the plungers *a*. As the rack D returns the plate G with the cinder material in each cell, and at the moment when the cells or holes in plate G come directly under the plungers *a*, the pulley T is disconnected from the shaft *k*, and pulley P^1 is connected with shaft *f*, the press box commences its downward motion, and the igniting paste is first transferred to the cinders, which are then pressed out of the holes of plate G by the plungers *a*, which are moved down with plate *c* within box B; and finally the cinders are detached from the plate G by the cut-off plate F, the holes of which correspond with the holes of plate G, and which is operated by the action of the ratchet M upon pin *q*, and the cinders operate upon the receiving box O.

Claim.—The arrangement of the mechanism described, and for the purpose set forth.

No. 18,552.—William Newell, of Philadelphia, Pa.—*Method of Cleaning and Polishing Coffee.*—Patent dated November 3, 1857.—The operation of this machine is as followns: The cylinder being charged with coffee, and steam introduced, motion is then given to the cylinders, and also to the coffee within the inner one; the heat from the circulating steam is imparted to the coffee, partially drying it, whilst at the same time it is being rubbed and polished by the friction between the rotating grains. The vapor from the coffee may escape through a suitable opening in the cylinders; and, instead of steam, hot air may be used, and effect the same purpose. When the drying and polishing is finished, the coffee is thrown out on the inclined screen F.

The inventor says: I am aware that a cylinder with a surrounding steam jacket has been used for many purposes. I make no claim to the apparatus described, but merely represent it to better illustrate my process of treating green coffee, and which process constitutes the essence of my invention. Grains, flour, and many other articles, have been subjected to heat, and motion, and friction, in a cylinder such as

I represent. To this I lay no claim, nor to the treatment of anything but coffee; and I am not aware that coffee has ever been cleaned and polished in the way which I have discovered.

But I *claim* the cleaning and polishing of green coffee by subjecting it to the combined action of heat, friction, and motion, as set forth.

No. 17,557.—EDWARD CONROY, of South Boston, Mass.—*Improved Cork Machine.*—Patent dated June 16, 1857.—The stuff from which the corks are to be cut is placed on bed L, and motion being given to shafts M and J, the bed L is moved upwards by resting on cam K, and is fed to the rotating cutters f^1; and as the work advances, the rod N being pressed on said cork causes the rods P to expand by the action of plate R, and thus the cutters f^1 will cut the corks in conical forms.

The inventor says: I do not claim the employment or use of expanding cutters for cutting corks, bungs, &c., irrespective of the arrangement shown; for expanding cutters have been previously used, although differently arranged from the plan shown.

But I *claim* the expanding cutters attached to the rods or bars P, and operated by the plate R attached to the rod N, the rods P having pins *g* passing through their upper ends, which pins are allowed to slide laterally in their recesses *h* as the rods are actuated by the plate R; the above parts being arranged substantially as described, for the purpose set forth.

I further claim, in combination with the cutters f^1, arranged and operated as shown, the cams K and bed L for feeding the stuff to the cutters.

No. 16,466.—SAMUEL COBB, of Cincinnati, Ohio.—*Improvement in Corpse Preservers.*—Patent dated January 27, 1857.—The nature of this invention consists in forming a chamber D in the lid of the coffin, which is filled with ice, said chamber communicating by means of short pipes 12 with the pipes 13 in each corner of the coffin, for the purpose of conducting the water of the ice in box C to basin *n*.

Claim.—Providing the lid of the coffin with sides or edges D D, when arranged with the pipes 13 at each corner of the lid, and made to extend down into the pipes 12 in each corner of the coffin; all for the purpose of confining the ice to the top of the lid and drawing the water therefrom collected by the melting of the ice, for the purposes mentioned.

No. 18,295.—THOMAS ODION, of Portsmouth, N. H.—*Apparatus to Protect Buildings from Fire.*—Patent dated September 29, 1857.—The object of this invention is to protect buildings from fire, which consists in constructing a portable metallic screen that may be easily and speedily raised to any required height between two buildings, or in the streets, to arrest the progress of the flames, or prevent their communicating with the surrounding property. The sheet iron used for screens is carried on a truck A, as shown in the drawing, constructed for the purpose, surrounding a roller supported at each end on journals in bearings I, erected on said truck. A number of these

screens, which can be raised to any height, can be arranged in a line or entirely around a burning building, for the purpose of preventing the effect of the wind upon the flames. To the upper part of the sheet W are attached a number of hooks *r r*, by which it is connected with the bar O. Guy chains R, attached to the caps T on the top of the rod N, with hooks at each end, are used to steady the top by anchoring in some permanent position.

The inventor *claims* the method herein described of protecting property against fire by means of a portable screen, in the manner substantially as set forth, or in any other equivalent manner.

No. 18,262.—HENRY LOEWENBERG, New York, N. Y.—*Fire-Escape Ladder.*—Patent dated September 22, 1857.—In the engravings, fig. 1 represents a bird's-eye view of the apparatus, showing the top front and oblique end of the extension ladders, when packed for transportation, excepting the baskets D D, which are taken off to show more clearly the manner of packing the ladders in a small space, when compared to the hook and ladders now in use. One of the baskets is thrown off the carriage, having its ropes attached, as shown at D.

Fig. 2 represents the ladders *a b c e* extended, and in the position to be used. This invention can be understood from the claim and engravings.

The inventor says: I am aware that ladders with long sacks to convey the occupants of a building to the ladder have been long in common use; but the application of baskets, or their equivalent, operated as above set forth, and the manner of elevating and packing the ladders, I believe to be new and useful.

I do not claim the extension ladders; neither do I claim the use of ropes passing around or over windlasses for the purpose of drawing or extending the ladders after they have been elevated to the desired angle ready for extending.

But I *claim* the manner of regulating or adjusting the trucks $f f^1$, fig. 2, by means of the hinged guide pole *k*, fig. 2, or guide bars, arranged and operating in the manner and for the purpose of supporting the ladders when secured by the rope I I^1 at any desired angle, substantially as described.

No. 16,863.—ISAAC P. NELSON, of Cambridge, Mass., assignor to Himself, and GEORGE N. DAVIS, of same place.—*Fireman's Mask and Respirator.*—Patent dated March 17, 1857.—The inventor says: I have adapted a tight-fitting mask to the face of the person, from which depend the air tubes through which he breathes; the extremities of the tubes reaching to within an inch or two of the floor.

The tubes C are united to the mask immediately beneath the nose; and at this point there is an opening *a* between the tubes and the interior of the mask, through which air is admitted for respiration. Immediately in front of the mouth there is an opening *f*, which is covered on the outside by the flexible valve *d*.

Claim.—The described mask, with its tubes C and valves *d*, operating in the manner substantially as set forth.

No. 16,626.—EDWARD DEACON, of Brooklyn, N. Y., assignor to JOHN WARRIN, of New York, N. Y.—*Improvement in Fishing-rod Reels.*—Patent dated February 10, 1857.

Claim.—Connecting the crank shaft F with the reel shaft E, and also disconnecting it therefrom by means of the slotted sleeve G placed or fitted upon the shaft F, and within the socket C, substantially as shown and described.

No. 17,469.—OSCAR F. MAYHEW, of Indianapolis, Ind., assignor to W. H. WEEKS and O. F. MAYHEW, of same place.—*Improvement in Hominy Machines.*—Patent dated June 2, 1857.—The grain, as it is fed into the machine through hopper G, is driven by beaters *b* of the revolving cylinder B against the sides of the concave A; and, passing through the partitions C by the openings D, it is constantly acted upon in the different compartments until, hulled and cleaned, it is discharged through spout H.

Claim.—The combination and arrangement of the concave A, wings or divisions *c c c c*, and the adjustable openings D D D D, when constructed and operated substantially as set forth.

No. 18,413.—PETER SIEMERS, of St. Louis, Mo.—*Improvement in Hominy Machines.*—Patent dated October 13, 1857.—This improvement consists in fixing in the periphery of a cylindrical stone B a series of double corrugated knives or breakers *a*, and of combining the said stone (having the knives arranged as aforesaid) with a cylinder D having burrs on the internal surface, the said burrs to move in a direction opposite to that of the said knives, whereby the corn will be broken by the action of the knives and thrown against the burred cylinder, which, moving in an opposite direction, will hull it and throw it back in contact with the stone, which will polish it, thus completing the operation of making hominy.

The inventor says: Now, a cylinder having corrugated knives or breakers has been used before, in combination with the burred cylinder, as such an arrangement is shown in the application of Wm. Davis; but this arrangement only breaks the kernel and hulls it, but does not polish it, which is the function performed by the stone in my machine.

I am aware that mere substitution is not patentable, unless the thing substituted performs a separate function and is a real improvement, which the stone, in the relation I have placed it, really is.

I therefore *claim* the stone in combination with the corrugated knives and burred cylinder, when used for the purpose specified and operated as described.

No. 17,264.—ZENUS CORBIN and GIDEON MARLETT, of Syracuse, N. Y.—*Artificial Honey.*—Patent dated May 12, 1857.—Four pounds of sugar are dissolved in one pint and a half of water, and raised to a boiling temperature; five grains of rosin and two drachms of butter are melted together and incorporated with the above syrup. This mixture is then boiled, and two drachms of gum Arabic, one drachm of isinglass, and one and a half drachm of cream of tartar are added

thereto, and this increased mixture is boiled again. One and a quarter pound of honey is then added, and, after boiling the mixture for a space of ten minutes, eight drops of essence of peppermint are added, when the mixture is ready for use.

Claim.—As a new product or composition, artificial honey, composed of the enumerated ingredients, or their equivalents, combined with each other, substantially in the manner set forth.

No. 17,934.—Ernst L. Kurtz, of New York, N. Y.—*Device for Protecting the Necks of Horses from Flies.*—Patent dated August 4, 1857.—The nature of this invention will be understood by reference to the claim and engravings.

Claim.—The stretchers *a* and *e*, in combination with the connecting cords, operating substantially as set forth, as a fly protection.

Also, the weighted cords *m* and *n* connected therewith, for keeping the protector stretched, and at the same time permitting the free movement of the animal's head.

No. 18,691.—Samuel P. Heintzelman, of Newport Barracks, Ky.—*Improvement in Method of Floating Horses, &c., across Rivers* —Patent dated November 24, 1857.—The two bags are united together by means of two girths *d* d^1, one, *d*, being intended to pass under the horse's belly, a little behind the fore legs, and the other a little in front of the hind legs. There are, also, straps *e f g h* which pass respectively in front of the breast, over the withers, and over the rump and behind the hams, and are secured either by buckles, as represented, or in some other convenient manner.

Claim.—The specific form of cavalry float described, consisting mainly of a pair of bags connected by girths and provided with the described fastening straps, the bags having each the form of two lobes connected by a duct, and being provided with suitable inflation tubes, as represented, or equivalent devices, for the purposes explained.

No. 17,263.—Thos. Cook, of New York, N. Y.—*Improved Machine for Cutting Match Splints.*—Patent dated May 12, 1857.—The blocks a^1 to be cut being placed within the box *a* and retained in position by feed follower *e*, motion is imparted to shaft A, and the blocks are carried over the cutters *o*, and as many splints are planed off as there are cutters. This cutting has left a series of grooves in the bottom, formed by the tops and sides of the cutters. The box *a* now retreats by the revolution of the crank shaft A, and so soon as the blocks are completely clear of the cutters, the cam *j* or j^1 strikes the roller *l*, moving the lever *m*, and with it the cross plate *d*, thus carrying the splint blocks and box *a* to one side sufficiently to bring all the projecting ridges left in the previous cut directly opposite to the centre of the cutters, when the operation of cutting is repeated.

Claim.—1st. The arrangement of the block carriers so as to have the two motions described, whereby the splints may be cut by stationary cutters, as set forth.

2d. I claim the method of supporting the block in the box by the

longitudinal pressing springs b^1, in connexion with a feed follower acting in conjunction therewith, as described.

No. 17,316.—THOMAS COOK, of New York, N. Y.—*Improved Machine for Gathering and Depositing Dipped Matches.*—Patent dated May 19, 1857.—The dipping board *a* containing the matches is placed in a vertical position within the frame *b*. Motion being imparted to driving wheel A, cam *p*, coming in contact with roller *x*, operates lever *o* of fulcrum o^1, and the pawls i i^1 impart to the dipping board *a* a downward motion, feeding it downward each time one row of matches. The cam *q* now operates roller k^2 and plate *k*, which is provided with pins k^1, which drive the matches through their holes in the dipping board, and thrust them on to table *r*. The cams *t* now operate levers *u* and sliding blocks *s*, which push the matches into the opening r^1, whence they drop into the match box held there by the attendant.

Claim.—In packing matches into boxes automatically, the method of feeding the "dipping board" in connexion with the operation of the discharging pins, specifically as described. Also, the receiving table, with its gathering and delivering blocks, in combination with the aforesaid means for conveying and discharging the matches from the "dipping board," the whole being constructed and operating specifically as set forth.

No. 18,273.—WALDREN BEACH, of Baltimore, Md.—*Apparatus for Opening Oysters.*—Patent dated September 29, 1857.—In the drawing, A is the frame; B is the head piece or box, which has an opening through which the lipped bar slides and the broken off shell passes; the upper portion of one side of the opening forms a knife edge; the box B has the shape shown in the drawings. C represents the sliding bar, having on its upper edge a lip, and having its other end fastened to the treadle K, which is hinged to the frame. *h* is a spiral spring surrounding the sliding bar and confined to the cups above and below. The upper cup is fastened to the bar, and the lower cup to frame A, and, by reason of an opening through which the bar passes, acts as a guide for the same. The frame has a plate attached to it to act as a guide for bar C.

Claim.—The inventor claims the combination of lipped bar C, treadle K, and spring *h*, with the cutting head piece B, constructed, arranged, and operating substantially as and for the purpose set forth.

No. 17,176.—AUGUSTUS STONER, of Mount Joy, Pa.—*Improvement in Self-Adjusting Sack-Holder.*—Patent dated April 28, 1857.—The mouth of the bag is fastened around the hopper D by attaching it to hooks *i*; the bag rests on the floor between the front feet and curved base A, and spring G keeps the bag stretched and causes it to adjust itself as it shortens by being filled up. The spring base F, with nut H, serves to raise or lower the hopper D, so as to adapt the same to longer or shorter bags.

Claim.—The spring G and the adjustable base F, by means of the

screw and burr H and piece *c*, and the hopper D, when combined, substantially as set forth.

No. 18,709.—WILLIAM E. ROBERTS, of Orange, Conn.—*Improvement in Scissors Sharpener.*—Patent dated November 24, 1857.—In describing his improvement, the inventor says: I make the block in a cubic or any other convenient form for two sharpeners, as shown in fig. 1, or for one sharpener, as shown in fig. 2.

I cut the space or spaces *b* in the block to admit the blade of the scissors of any convenient size, and with the proper bevel, on one side, to the steel to give the edge to the scissor-blades, as seen in the engravings. I temper the steel in the usual way, and insert it into the block in the position shown at *a*. Having made the sharpener, as before described, to sharpen the scissors, I pass one of the blades at a time through the space or opening *b*, holding the flat side of the blade against the side *c* of the space *b*, press its edge upon the steel, and work it through longitudinally till a perfect edge is formed, which will generally be effected by pressing it through two or three times; thus making a very convenient sharpener for scissors.

Claim.—The article of new manufacture of scissors sharpener, when constructed and fitted for use, as described.

No. 17,179.—JOHN A. WINSLOW, of Roxbury, Mass.—*Improvement in Skates.*—Patent dated April 28, 1857.—The nature of this invention will be understood by reference to the claim and engraving.

Claim.—The application of a second metal runner to the skate, which being placed on the bottom outside of the central line of axis, and the runner in the ordinary skate which lies along that line removed to a correspondent position on the other side, completes the improvement.

No. 17,414.—R. W. BELSON, of Philadelphia, Pa.—*Improvement in Skates.*—Patent dated June 2, 1857.—This invention consists in constructing the skate entirely of cast iron, the skate being cast in separate and distinct parts, which are longitudinal halves, each part being composed of one-half of the stock and one-half of the runner, which parts are then secured together by means of screws or rivets *d*.

The inventor says: I do not claim separately forming the runner of two parts, for this has been previously done.

I am also aware that the stock, formed of a certain number of parts, and the runner of a skate, have been cast solid or in one piece, and a patent was granted to B. F. Shelabarger for such mode of construction. In Shelabarger's skate the object appears to be economy only, no reference being had to the formation of the gutter.

Neither do I claim casting the stock and runner in one piece, for this has also been previously done.

But I *claim* constructing the skate entirely of cast metal, and of two parts connected together, substantially as shown and described.

No. 18,685.—STOCTON H. EVANS and LUDWIG GENTSCH, of Philadelphia, Pa.—*Improvement in Skates.*—Patent dated November 24,

1857.—The nature of this invention in skates consists in arranging spurs upon the skate to enter the rear or outside of the heel of the boot or shoe, in combination with an inclined rotating spur or cam, made to press against the front of the heel, which is to be pushed against the spurs and locked down to the skate. Also, in placing an adjustable plate over the fore part of the skate, which is provided with set screws, so as to raise and lower said plate to tighten or adjust the straps which cross the top of the foot to secure the skate upon it.

The inventors say: We *claim* the spurs F F, or their equivalents, in combination with the inclined rotating spur or cam G, which presses the heel against the spurs F F and locks it down to the skate, as described.

We also claim the adjustable plate Q over the fore part of the skate, constructed and arranged substantially as described, for the purpose of adjusting and tightening the straps over the top of the foot.

No. 16,653.—Henry Pickford, of Boston, Mass.—*Mode of Fastening Skates.*—Patent dated February 17, 1857.—These skates are fastened to the soles of the boots or shoes; a plate B is attached to the front part of the sole. The tongue *c* fits into a recess in, and is hinged to, plate B. When the skate is to be attached, the tongue is to be raised out of the recess, as represented in figure 1; the notch *e* of the skate plate D is placed against stem *b* of the tongue, and the runner (being in a transverse position to the length of the foot) turned around until the front edge of the plate C, attached to the heel of the boot, fits into the grooved portion of the skate plate F. As soon as the spring pin *i* falls into a corresponding hole in the plate C, the skate is firmly secured to the boot.

Claim.—Uniting the skate blade to the sole of the boot or shoe, substantially in the manner and for the purpose above described.

No. 17,019.—Samuel R. Burrell, of New York, N. Y.—*Improvement in School Slates.*—Patent dated April 14, 1857.—The permanent file C and movable file D D^1, as described in the claim, serve for sharpening the slate pencil. The file D D^1 is pivoted to the frame, and covers a recess which serves for the reception of the pencil.

Claim.—The application of a permanent or fixed file, and also a movable file, to the ordinary slate frame of commerce, in form and manner as set forth and described.

No. 16,549.—James R. Nichols, of Haverhill, Mass.—*Improved Apparatus for Containing and Dispensing Syrups for Soda Fountains.*—Patent dated February 3, 1857.—A A A are the cans for different varieties of syrups. The cocks E being open, air is forced into the cans through pipe G. Either one or two of the cans may be separated from the other or others by shutting up its stop-cock E.

Claim.—The described arrangement of a series of cans, with their pipes and cocks, whereby they may be simultaneously charged with compressed air by a single pump, and any one of them may be isolated from the others, for the purpose of replenishing, as set forth.

No. 17,158.—CURTIS O. LUCE, of Brandon, Vt.—*Improved Street Sprinkler.*—Patent dated April 28, 1857.—As the carriage is drawn along, the wheels H are rotated by means of gearing E G, pulleys G^1 *b*, and belts *a*. The water passes from tank C through pipes I into wheels H, and is discharged therefrom by centrifugal force, and at a considerable distance.

Claim.—The combination of the water reservoir C, horizontal rotating discharging wheels H H, operated from the wheels B B of the carriage, substantially as shown, and the conveying pipes I I provided with the cocks J J; the whole being arranged, as shown, for the purpose set forth.

No. 18,416.—M. W. ST. JOHN and ISAAC BROWN, of Leonardsville, N. Y.—*Improvement in Street Sweepers.*—Patent dated October 13, 1857.—This invention operates thus: When the sockets or boxes H are secured by the bar I in line with each other, and the shafts F adjusted obliquely to the bar A, as shown in the drawings, the brushes or scrapers L will, as the implement is drawn along, scrape the dirt from the point 1 to 2, and leave it in a winrow at 2; and the sockets or boxes are allowed, in consequence of their connexion with bar A by the universal joint *g*, to adjust themselves to the inequalities of the street.

When the sockets or boxes H H are adjusted obliquely, as shown in fig. 2, the shafts F are placed at right angles with bar A, and the dirt scraped in a winrow between the inner ends of the two sockets; and if the gate K be lowered by turning the frame J over backwards, and the frame and gate raised intermittently by the operator, the dirt will be swept up into piles.

The inventor says: We *claim* the sockets or boxes H H provided with brooms or scrapers L, and attached to the bar A by the universal joint *g*, in combination with the adjustable shafts F attached to the bar A, substantially as shown, for the purpose set forth.

We further claim, in combination with the broom, socket or boxes H, and adjustable shafts F, the gate K applied to the implement, as described, for the purpose specified.

No. 18,195.—JOHN CRITCHERSON, of Boston, Mass.—*Improvement in Street Sweeping Machines.*—Patent dated September 15, 1857.—The nature of this invention will be understood by reference to the claim and engravings.

Claim.—The improvement in street sweeping machines, which consists in the combination of the adjustable sliding bars *n*, travelling in the arc of a circle *o*, with the universal joints *k*, for driving the diverging shafts upon which the brushes are arranged, whereby the sweeping apparatus is adapted to streets of various widths.

No. 18,664.—DAVID SHATTUCK, of Boston, Massachusetts, assignor to Himself, JOHN S. SHATTUCK, JACOB MORRILL, and WILLIAM P. MARSHALL, of Boston, Massachusetts.—*Improvement in Street Sweeping Machines.*—Patent dated November 17, 1857.—The operation of this invention is as follows: When the cam R is in the position shown in

the engravings, or with its diameter at right angles to the lower axis of the machine, the dirt is swept up in a row on either side of the machine according to the direction in which the brush head M may be revolving. As the machine is drawn along over the ground, the head M is revolved in a horizontal plane, and the brushes O sweep the dirt before them until each arm N, as it travels around, rises on the edge *l* of the cam R, and its brush is lifted out of contact with the ground until the head M has made a half revolution, when the arm again drops off the cam and its brush commences to sweep. The brushes thus sweep while they are revolving through a semi-circle, and deposit the dirt in a winrow as they begin to rise on the cam R; thus, by altering the position of this cam, the winrow may be left either at one side or under the machine, as may be desired.

Claim.—The above described arrangement of the cam R beneath the horizontal arms or brush carriers N, whereby the dirt may be thrown to either side or to the centre of the street, as set forth.

No. 17,811.—WILLIAM T. SHANNON, of Greensboro', Georgia.—*Fly Trap.*—Patent dated July 14, 1857.—The apparatus, as represented in the engraving, is placed in the window of the room; the room is then darkened, and the flies, attracted by the light which passes through glass 4, enter box A, through the passage between the glass plates 2 and 3, from which they ascend through passage 5 into the bag 7. When desired, the tin plate 6 and bag 7 can be removed, and the bag immersed in water to destroy the flies.

Claim.—The invention of the box above described, and the bag and its attachment to the box, for the purposes named.

No. 18,261.—SAMUEL R. WILMOT, of Watertown, Conn.—*Fly Trap.*—Patent dated September 22, 1857.—The body of this trap is formed of tin plate, marked A in the engraving, the parts of which are cut and bent into shape, and soldered together, so as to form a sort of broad and narrow pocket. The mouth *a b* of the pocket is fitted with a self-acting flap valve C, which is hinged just within the upper lip *a a*, and falls in an inclined position to the lower lip *b b*, upon which its lower edge rests. The hinge of this valve is made very flexible, so that a sudden movement of the fly trap in the direction of the arrow *d* will cause the valve to flap back, and leave the mouth of the trap unobstructed. The hinder part of the trap is perforated with small holes. The upper side of the instrument is fitted with a handle E, by which it can be operated.

The inventor says: I *claim* a fly trap constructed substantially as set forth, and consisting of a receptacle which is constructed and operated in such manner that when it is swept over a table or other object, the mouth is open to receive flies, and when the sweeping movement is finished, the mouth is closed to prevent their escape.

No. 17,803.—DONALD MCLEAN, of Boston, Mass.—*Self-Setting Trap Hook.*—Patent dated July 14, 1857.—When a fish pulls on the bait hook B, the elastic cord E will stretch, as seen in figure 2, and the

point of hook S will be driven into the fish, preventing it from breaking away.

Claim.—The combination of the hooks B and S, constructed substantially as set forth, with the elastic cord or spiral spring E and line L, operating as described and for the objects specified.

No. 17,570.—HENRY HACKMAN, Jr., of Pequea, Pa.—*Improvement in Animal Traps.*—Patent dated June 16, 1857.—This trap being set over a trough or hole, the animal passes along the platform B to the bait on hook K, and stepping upon spring board G, the end of the spring board is depressed, drawing down the upper end of lever M, the lower end of which forces spring L inward; the catch P being thus released, the platform B is tilted downward, swinging on shaft D, whilst spring I forces one end of spring board G upward, and throws the animal down into a trough underneath. The moment the animal has fallen underneath, the weight-box C brings the platform B to its level again, and the trap is thus adjusted to receive another animal.

The inventor says: I am aware that tilting platforms are used for catching animals, and various kinds of levers, springs, and weights are attached to operate such platforms. These I do not claim.

I *claim* the combination of the self-acting spring board G with the platform B, horizontal spring I, and lever M, constructed, arranged, and operating substantially as described, for the purpose of assisting in throwing off the animal as the platform tilts.

No. 18,092.—GEORGE HART, of Granger, Ohio.—*Improvement in Animal Traps.*—Patent dated September 1, 1857.—The trap being set as represented in dotted lines on figure 2, when the animal steps upon the fall B, the catches F are thrown off the pins H, and the recoil of the springs E brings the jaws C together. When the animal pulls to get away, he, by these efforts, pulls upon chain I, one end of which is firmly secured to a stake; the pulling upon chain I draws ring J backward to the position represented in figure 1, thereby tightening the grasp of the jaws C.

Claim.—The arms C^2 C^2, springs E E, and ring J, when arranged substantially as set forth, for the purposes described.

No. 16,335.—C. JILLSON, Worcester, Mass.—*Manufacture of Animal Traps.*—Patent dated January 6, 1857.—This trap is represented in fig. 2 as being set. The animal, in passing through ring C, touches the point *g* of lever F, which, by the slightest pressure upon it, is caused to turn on its fulcrum 2, while lever *e* turns on its fulcrum 1, by the action spring *c*, the trap being thrown into the position of fig. 1, and the points *d* piercing the animal.

Claim.—A new manufacture of animal traps, composed of the several parts set forth, and operating as described.

No. 17,297.—FREDERICK REUTHE, of Hartford, Conn.—*Trap for Animals.*—Patent dated May 12, 1857.—The bait is fastened to the middle spear H, and the main spring *c*, together with hammers L, is raised by means of trigger F. The apparatus is suspended to the

branch of a tree by a chain passing through ring K. The victim seizes the bait, and, pulling it to devour it, the springs G in the centre barrel B slide forward, and the pin attached to the same raises the lever E, which throws back head D, releasing the main spring *c;* and the hammers L fall forcibly on the percussion caps, causing the explosion of the barrels A, at the same time that the springs G expand in the animal's mouth, and the barbs and fangs hold him fast.

Claim.—The sliding and expanding spring barbed fangs G G and H, in combination with one, two, or more exploding barrels, operating in the manner and for the purpose substantially as set forth.

No. 16,516.—WELCOME WHITAKER, assignor to HENRY L. PALMER and JULIUS A. SKILTON, of Troy, N. Y.—*Vermin Destroyer.*—Patent dated January 27, 1857.—Air is drawn from the atmosphere by means of the bellows A, and is forced into the combustion chamber B. H is the generator in which the deleterious material P is burned by first igniting it at its top surface, when the condensed air in B passes down through P and keeps it ignited, and thereby becomes charged with the deleterious gaseous products, and then passes through the pipe M into C, which retains the solid and liquid products, and gives more steadiness to the stream of air as it passes out of C through the pipe O to be applied to the insects.

Claim.—Combining with a fumigating furnace or combustion chamber bellows and a flexible pipe, in the manner set forth.

I limit my claim to the use of bellows and flexible pipe, and to their use in the manner set forth.

APPENDIX TO DESCRIPTIONS AND CLAIMS.

[The cases contained in this Appendix were omitted in their proper places.]

I.—AGRICULTURE.

No. 18,497.—EBENEZER BUTLER, of Pompey, N. Y., and GEORGE M. PECK, of Abington, Pa.—*Improvement in Butter-Workers.*—Patent dated October 27, 1857.—The nature of this invention consists in providing a box, in which is placed a plunger, crank, and partition, so combined as that when the crank is operated the partition and plunger shall have a vibrating motion, and act upon the butter placed between them with a rolling motion, thereby causing the butter to be constantly in motion, and to be worked thoroughly and compactly. A scraper is also arranged to work up and down in grooves in the side of the box, in connexion with the plunger, so as to clear it of any butter adhering to it.

Claim.—The arrangement of the crank B, plunger C, the partition D, and scraper E, to work in combination, as described, in the process of working butter.

No. 18,797.—BENJAMIN BEERS, of New Fairfield, Conn.—*Improvement in Churns.*—Patent dated December 8, 1857.—The nature of this improvement in barrel churns consists in a revolving dasher with spring floats V so arranged that they are rigid when the dasher is turned in one direction to churn the cream, and yield or give way when the dasher is turned in the opposite direction to gather and amass the butter; so that the butter-milk can be drawn from it, when the butter may be worked, salted, and the salt worked in by the dasher.

L is an axle or shaft fitted to turn in perforations in the heads A A, and has a crank-handle M by which it is turned; this shaft may be removed by drawing the staple-key N, which passes through the hub O in the head A and into the score P in the shaft to hold it in the barrel. The disks Q Q are fitted into the shaft L, and connected together by the rods R R, and prevented from turning on the shaft by the metal plate S, which is fitted to the square part T of the shaft L, and fastened to the disks Q.

Claim.—A rotating dasher with spring floats, constructed and arranged substantially as described, so as to churn the cream and work the butter substantially in the manner set forth.

No. 18,325.—A. M. COOK, of Milford, Mass.—*Improved Corn-Sheller.*—Patent dated October 6, 1857.—In operating this machine, the ears of corn are thrown in suitable quantities into the hopper H,

whence they pass down through the opening *b* and are received on the disk K, between the guard *g* and the opening *b*, whence they pass in succession between the arm I and guard *g* and beneath the block M, which keeps them down in contact with the teeth *i* of the disk K, by which the ear is rolled over against the arm I, and the grains are stripped from the cob, the grains falling through the holes *c* in the disk K on to the inclined table *o*, by which they are conducted out of the machine. The cob, being still kept with its axis parallel to the arm I, is caused by the motion of the disk K to work towards the periphery of the disk; but before it reaches this part of the circle it is entirely stripped of its grains, and the shelled cob is ejected from the machine through suitable openings, as at *p*, in the casings N.

Claim.—The inventor claims the perforated revolving disk, in combination with the radial arms I *g* and blocks M, constructed and operating in the manner and for the purpose substantially as set forth.

No. 18,174.—EDMUND L. FREEMAN, of Brownville, N. Y., assignor to Himself and J. & G. LORD & Co., of Watertown, N. Y.—*Improvement in Cultivator Teeth.*—Patent dated September 8, 1857.—The nature of this invention will be understood by reference to the claims and engravings.

The inventor says: I do not claim a metal casting to form a head or stay-pin of the tooth.

Neither do I claim a bolt for connecting to the frame, as they have been long known and used.

I *claim*, 1st. A lapped-headed cultivator tooth A, made in the manner substantially as described.

2d. A brace-washer and stay-pin B in one piece underneath the head, substantially as described, for the purposes set forth.

No. 18,979.—HORACE A. LOTHROP, of Sharon, Mass.—*Improvement in Hoes.*—Patent dated December 29, 1857.—The claim and engravings explain the nature of this invention.

The inventor says: I do not claim a hoe made with a single triangular blade.

Nor do I claim one as made of a single blade, having two opposite parallel edges and a triangular notch, whose opposite side and the parallel edges of the hoe plate form boundaries of two teeth extending from the plate.

But I *claim* an improved manufacture of hoe, or one having its blade composed of two or more separate isosceles triangular plates or teeth, each being lapped on or connected to that next to it at their two corners, and each being supported by a separate prong of a furcated shank, as described.

No. 16,737.—WILLIAM LEWIS, of Seneca Falls, N. Y.—*Improvement in Machines for Husking Corn.*—Patent dated March 3, 1857.—A stationary knife with a concave edge is employed to cut off the nubbin or butt of the ear; a bar presses down on the same, and the ear is then discharged from the husks by the action of the hammer. The clearing rod rids the knife of the nubbin, should it incline to adhere.

The inventor says: The connexion of the hammer G to the rod F, to the plate or spring *b*, is not strictly essential. In practice, or in an operating machine, the hammer may be rigidly attached to the rod F, but probably the elastic or spring connexion is preferable. I do not confine myself, however, to either mode of attachment.

I *claim* the bar D, knife B, bar or hammer G, and stop E, in combination with the clearing rod Q, when the whole are arranged to operate conjointly, as shown, for the purpose specified.

No. 17,731.—WILLIAM EMERY, Jr., of Chester, Ill —*Improvement in Machines for Husking Corn.*—Patent dated July 7, 1857.—The nature of this invention will be understood by reference to the claim and engravings.

The inventor says: I do not claim separately any of the parts described, as analogous devices most probably have been used.

But I *claim* the combination of the rotating hub C and knife E, inclined box or trough J, and stripping hooks *o*, when the above parts are arranged to operate, as shown, for the purpose set forth.

No. 17,350.—THOMAS HARDING, of Springfield, Ohio, assignor to BENJAMIN H. WARDER, JOHN W. BROKAW, and JONATHAN E. CHILD, of the same place.—*Improvement in Mowing Machines*—Patent dated May 19, 1857.—When it is desired to back or turn this machine, the driver draws back lever H, which turning on its fulcrum raises the forward end of yoke B, together with the front wheel A, off the ground, and depresses the rear end and wheel, thus raising bracket E and finger bar C off the ground, and supporting the whole weight of the machine upon the hind wheel, which renders it easy to back or turn the machine.

Claim.—The combination with a mowing machine of the peculiarly constructed truck A B, when both are arranged to operate in relation to each other, in the manner and for the purposes set forth.

No. 18,148.—D. W. HUGHES, of New London, Mo.—*Improvement in Corn Planters.*—Patent dated September 8, 1857.—By connecting the two seed planters together in the manner represented in the engravings, they may be adjusted so as to drop the seed nearer together or further apart by merely raising or lowering the pin *l* on the pendant bar *j*.

The inventor says: I do not claim the two strips or bars, joined together, and provided with a hopper and slide, irrespective of the peculiar arrangement of the slide and hopper, for such device, having a different arrangement of parts from that shown, was formerly patented by me.

But I *claim* connecting the two implements together by means of the plates *h*, and bars *m*, and pendant bar *j* J, arranged as shown and described, for the purpose set forth.

No. 18,104.—THOMAS J. ROGERS, of Cassville, Ga.—*Improvement in Cotton Seed Planters.*—Patent dated September 1, 1857.—The nature of this invention will be understood by reference to the claim and engravings.

Claim.—Forming one side of the eduction aperture of a cotton seed planter of the extremity of a sharply vibrating plate F, when the opposite side of said aperture is formed of an adjustable flaring concave *k*, substantially as set forth.

No. 18,524.—JOSEPH D. SMITH, of Lancaster, Ohio.—*Improvement in Seed Planters.*—Patent dated October 27, 1857.—This invention consists for use, in connexion with a planter to be propelled by hand, in the arrangement consisting of the double-acting valves F G, compound lever G H, double-chambered hopper B, adjustable pitman I, and swinging self-adjusting roller D; the whole being arranged so as to enable the operator to plant in hills, by hand, at each half vibration of the valve, and, when necessary, to plant in drills by the revolution of the roller.

Claim.—The use, in combination with a planter to be propelled by hand, of the arrangement consisting of the double-acting valves F G, compound lever G H *g h i*, double-chambered hopper B F, adjustable pitman I, and swinging self-adjustable roller D; the whole being arranged and combined substantially as set forth.

No. 17,594.—MICAJAH TOLLE, of Newport, Ky.—*Improvement in Cultivator Ploughs.*—Patent dated June 16, 1857.—The bracket *c* is slotted, and the beam *d* perforated in the manner represented in the engraving, so as to admit of adjustment of the entire range of blades b, b^1, b^2, &c., longitudinally of the beam and to any angle therewith, and the individual blades to a greater or less distance from each other.

The inventor says: I am aware that various forms of hoes and harrows, having their teeth placed obliquely with the line of draught, have been employed, both for removing clods and covering seed, and also that oblique arrangements of teeth in various forms exist commonly in harrows, cultivators, &c.

I *claim* the bracket *c*, in combination with the plough beam *d*, constructed, arranged, and operated in the manner substantially as and for the purposes set forth.

II.—METALLURGY.

No. 16,732.—CHARLES HUTCHINS, of East Douglass, Mass.—*Improvement in Machines for Making Axes.*—Patent dated March 3, 1857.—Figure 1 is a front elevation; figure 2 a side view of the dies *p p;* and figures 3 and 4 sections taken at the lines A *a* and B *b;* figure 5 is the block of iron; figures 6, 7 and 8 represent its shape as it comes successively from the dies *e e p p*, and, finally, from the apparatus *z s t*. The block, when shaped as represented in figure 7, is placed on the upper face of former *s*, which corresponds with the upper inner surface of the eye of the axe when completed. The head *a* is griped by the

jaw *t*, the jaw being depressed by means of treadle *v*; the sliding carriage *w* is then depressed by means of crank rod a^1, when the rollers *z z* passing downwards will bring the iron to the shape, as represented in figure 8.

The inventor says: I have described three machines which are employed in the successive operations to produce axe polls; but I do not wish to be understood as making claim to the mechanical construction of either of the said machines, as substantially such machines have been used separately for other purposes, although under modifications which would not answer the purposes specified. Nor do I wish to be understood as limiting my claim of invention to the use of machines constructed specifically as described, as they may be modified in many respects without essentially changing the mode of their operation by which they are rendered useful in the production of axe polls.

I *claim* the preparation of the bar or block of iron by longitudinal rolling between rolling dies, operating substantially as described, to form it with a projection on one face in the middle of its length, and two projections on the opposite face, one at each end, substantially as described, in combination with the cross rolling between segment dies under a mode of operation substantially such as described, to reduce the thickness of the cheeks towards the edges, and to the required swell on the edges of the cheeks, substantially as described, and for the purpose specified.

No. 16,868.—NORMAN AYLSWORTH, of Rochester, N. Y.—*Improvement in Casting Railway Car Wheels.*—Patent dated March 24, 1857.—The core *c* is made tubular for a portion of its length, namely, to the line *b*, in figure 2, and to the hole *g*, in figure 1. The fluid metal passes through this core, and reaches the wheel through the horizontal gates *g g*. The core box is formed in two parts, divided at right angles to the line of action shown in the engravings, and has the bottom *d*. Across this core box is placed the bar *e*, which forms the gates, and is supported at each end by the pins P P. The rod *r* rests upon this bar, being kept central by means of the pin I, and forms the hole for the sprue. Sand is filled in and rammed down in the usual manner of making cores; the rod *r* is removed, then one-half of the box is taken away, and the bar *e* is easily withdrawn.

Claim.—The construction of the partially tubular core *c* for the centre of railroad car wheels; the tube T being formed to within a short distance of the end of said core, and communicating with the lateral passages *g g*.

No. 17,458.—JONATHAN F. TURNER, of Bridgewater, Mass.—*Improved Machine for Filing Saws for Cotton Gins.*—Patent dated June 2, 1857.—The saw cylinder, containing the saws E^1, having been arranged in its proper place, the frame O which supports the file holders Y may be adjusted to its proper height by turning set screw Q^2. Rotary motion being imparted to pulley T, pulley U is rotated, and the files *h* are vibrated, acting on the back of the saw teeth of the saws E; and as the saws are turned with a continuous motion by the arrangement of belt *m*, pulley *g*, belt *r*, pulley *s*, screw *t*, wheel t^1,

pulley *u*, and belt u^1, the file holders *f* yield so as to let the files spring over the teeth, the files passing from one score into the next.

Claim.—Giving the files a reciprocating rotary or rolling motion by devices such as are described, or their equivalents, for the purposes set forth.

The adjustable vibrating frame carrying the traverse rods, which operate the files when arranged to vibrate parallel with the plane of the saws, so as to adjust and adapt the files to the saws, as described.

Giving the saws a continuous rotary motion while they are operated upon by the files by means of a belt applied directly upon the saw cylinder.

A yielding or spring file holder, in combination with a traversing rod, having a reciprocating rolling motion.

No. 17,672.—WILLIAM COOPER, of Brooklyn, N. Y.—*Improved Horse Shoe.*—Patent dated June 30, 1857.—The object of the opening *o* is to admit of medicated appliances being introduced to wounded or disabled parts.

Claim.—The use of a metallic plate horse shoe covering the base of the hoof, having a suitable stopper fitting into a screwed opening in the same, or an equivalent therefor, constructed in the manner and for the purposes substantially as described.

No. 16,792.—EDMUND FIELD, of Greenwich, Conn.—*Improved Escutcheon for Key-Holes.*—Patent dated March 10, 1857.—This key-hole drop C, consisting of two parts *b* and *c*, pivoted together at *d*, can be applied to a sunken escutcheon A *a*, of much smaller diameter than if the usual drop were employed. Fig. 3 represents the drop when removed from the key-hole.

The inventor says: I do not claim the broad idea of jointing metallic or other bars by means of hinges or pivots, as this is everywhere well known.

But a key-hole drop made in two parts, pivoted together, has never before been known. It is a new article of manufacture, possessing virtues and advantages not seen in any other article of the kind.

I *claim* the key-hole drop C, composed of two parts *b c*, pivoted together.

No. 18,542.—E. L. GAYLORD, of Terryville, Conn.—*Improved Machine for Bending Metal Plates.*—Patent dated November 3, 1857.—The operation of this invention is as follows: The plates L are cut of proper size, and are bent thus: One end of a plate L is placed within the recess C, and the block C is then moved forward, by turning the screw E, until the lower end of the plate L is placed within the recess *c*, and the block C is then moved forward by turning the screw E, until the lower end of plate L is secured or clamped between the cross piece *b* and the block H. The upper part of plate L is then bent over a trifle, as shown by the dotted lines, in fig. 1, and the drop K is then allowed to descend, the drop bending the upper plate flat upon the surface of the block or bed H. The block I serves as a stop, and prevents the plate from being expanded too much in a longitudinal

direction. When the plate L is bent, the drop is raised, the block C moved back, and the cross piece *b* raised by turning the crank G, so that the bent plate may be removed.

The inventor says: I am aware that metal plates are bent or swaged in various forms by means of what are known as drop presses, and I therefore do not claim the drop K; nor do I claim broadly a drop press, nor any of the parts described, separately.

But I *claim* the block C, provided with the movable arms *a a* and cross piece *b*, the block or bed piece H, and adjustable stop I, arranged as shown, and used in connexion with a drop K, or its equivalent, for the purpose set forth.

CLAIMS OF RE-ISSUES GRANTED DURING THE YEAR 1857.

No. 420. *Improvement in Axle-Box Rollers.*—We claim giving a positive motion or rotation to the lubricating roller by the axle of the car wheel, in the manner set forth.

G. W. Geisendorff.
J. C. Geisendorff.

No. 421.—*Improvement in Moulds for Pressing Bonnet Fronts.*—I claim the hollow metallic mould, substantially such as described, of the form required to give the complete form required for bonnet fronts, and provided with a mode of imparting to it the required temperature, and the matrix of corresponding form to make pressure by a motion in or nearly in the line of the axis, when the said mould and matrix are used in connexion and in combination with the means herein described, for controlling the position of the strip to be pressed, or any equivalent therefor, as set forth.

Whitten E. Kidd.

No. 422.—*Improvement in Cleaning the Top Flats of Carding Engines.*—I claim suspending the top flats or lays upon pivots in the centre of the ends by which they can be raised out of the way of the adjoining flats or lays, to be turned by means of a rack working on pinions upon their pivots, or the equivalent thereof, the whole being constructed and arranged substantially as herein described, for the purpose set forth.

And I also claim stripping the flats or workers by a rotating brush, so arranged that a card may, in turn, strip the brush, and return the strippings to the main cylinder, substantially in the manner and for the purposes described.

I also claim the combination and employment of the "lickers-in" $c\,c^1$ $d\,d^1$ and worker *e*, arranged substantially as herein described, and acting as workers and strippers, in the manner and for the purpose described.

W. H. W

No. 423.—*Improvement in Machinery for Making Cord.*—I claim, first, twisting or controlling the twist of the strands, while the main frame is revolving to lay them into cord, by causing an even faced wheel, attached concentrically to and revolving with the bobbin frame, to travel over a fixed and smooth surface, friction causing the frame to revolve.

Second. Revolving the bobbin frames on their own axes to twist the strands at the same time that they are carried round a common centre to twist the cord by rolling them on the surface of a stationary annular inclined track, towards the inner or outer periphery of which they can be adjusted to run, so as to vary the relative twist of the strands and cord, substantially as herein set forth. But I make no claim to the mere turning of the bobbin frames by friction by any of the devices usually employed for similar purposes.

Third. I claim the construction and arrangement of the central stem or spindle of the bobbin frame, operating substantially as herein set forth, whereby the yarns are collectively subjected to progressively increasing tension and twist from the commencement to the end of the process of laying them into the strand, whereby the latter is rendered smooth and regular in its figure, and of uniform density and strength, and subjected to uniform tension while being laid into the cord.

WILLIAM E. NICHOLS.

No. 424.—*Portable Steam Sawing Machine.*—I claim an independent portable steam sawing apparatus, constructed substantially as herein set forth, and connected in such manner with the boiler for generating steam that the steam sawing apparatus can be moved from tree to tree, or applied in different positions at different parts of the same tree, without moving the steam boiler, or breaking the steam connexion therewith.

SAMUEL R. WILMOT.

No. 425.—*Improvement in Mode of Driving Reciprocating Saws.*—I claim the mode herein described of applying the power of the engine to the saw gate or frame without being permanently connected therewith, so that the piston shall be in a great measure relieved from any lateral motion which the gate may have, which causes it to bind or cut in the cylinder, substantially as described.

I also claim driving one or more saws between two cylinders, as well as driving one or more saws on each side of a single cylinder, and the self-adjustable piston rod, or the self-adjustable slides, which accomplish the same result, as are herein before described.

ISAAC BROWN.

No. 426.—*Improved Raking Attachment for Reapers.*—I claim the combination of the jointed rake arms *b* and *c* with the disk C, by which the arm B is actuated, when the above parts are constructed and arranged for joint operation in the manner and for the purposes set forth.

M. G. HUBBARD.

No. 427.—*Improvement in Machines for Pressing Bonnets and Bonnet Frames.*—I claim pressing the whole of a bonnet or bonnet frame, including the flaring face-piece, side crown, and tip, at one operation, by dies, substantially as specified, whether said bonnet or frame be formed of one or of several pieces, and irrespective of the particular shape of the bonnet or frame.

I also claim forming the side crown and flaring face-piece of a bonnet frame in one piece, or at one operation, as specified.

WILLIAM OSBORN.

No. 428.—*Improvement in the Manufacture of Hosiery.*—I claim the production of the heels and toes of hosiery by knitting a piece of spherical or other suitable form on the cylindrical or straight portions of the leg or foot by any mode of operation in which the stitches are dropped, or left upon the needles and taken up again, substantially as herein described, whereby the whole of the leg and foot is enabled to be produced by a continuous operation of the machinery or devices employed.

WILLIAM H. MCNARY.

No. 429.—*Improved Machine for Making Clothes Pins.*—I claim, 1st. The use of holes in a wheel, or of tubes secured to a wheel, and into which the pieces of wood are fed, and are thus retained in and moved forward to the right position, to be acted upon by the lathe, saw, or bit.

2d. I claim the sliding or vibrating lathe and tail block, whereby the pieces of wood to be turned are carried forward to the action of the cutters or chisels.

3d. I claim the cutters or chisels, in combination with the lathe.

4th. I claim a holder essentially the same as shown and described, to hold the pieces while being sawed or bored, the succeeding piece forcing the preceding one out of the holder, and it drops between the holder and saw or bit; and whether the holder be movable or stationary, the saw or bit being made to move to and from the holder, or the holder be made to move to and from the saw or bit.

5th. I claim a saw or bit, either movable or stationary, in combination with the holder.

6th. I claim a punch, or its equivalent, to force the pieces into the holder.

GEORGE W. PARKER.

No. 430.—*Bituminous Ground for Photographic Pictures.*—I claim sensitized bitumen, prepared as above, for the purpose of taking photographic impressions on paper, metallic sheets, or other substance.

V. M. GRISWOLD.

No. 431.—*Improvement in the Mode of Constructing a Combined Caldron and Furnace for the use of Agriculturists and others.*—I claim combining a caldron with a small square or rectangular or box stove of less area than the caldron, by spreading out the upper part of the

box stove to a circular form to surround the caldron by a flue space, substantially as and for the purpose specified.

I also claim making the casing to form a flue space around the caldron by elevating and spreading the plates of the stove, in combination with sectional side pieces, substantially in the manner and for the purpose specified.

JORDAN L. MOTT.

No. 432.—*Improvement in Looms for Weaving Pile Fabrics.*—First, I claim the method of constructing and operating the pincers, or other equivalents, for successively operating the pile wires, so that they shall carry said pile wires forward to the fell of the cloth, and hold them in position with their proper edges upwards until they are otherwise secured, substantially as specified.

I also claim constructing the pincers for successively operating the pile wires, with grooved jaws opening and closing in a line with the pile wire, and with a motion in advance of the lathe, substantially as specified, whereby collision with the lathe is easily avoided.

I also claim the employment of a support or guide to successively receive the inner ends of the pile wires as they are drawn from the cloth and carry them to the position where they are to be introduced into the shed of the warps and guide them therein, substantially as specified.

I also claim the employment of long, horizontal guides to guide the pile wires as they are being inserted in the shed of the warps, substantially as specified.

I also claim holding the pile wires and guiding and adapting the pincers, or their equivalents, to a suitable position to engage therewith, substantially as specified.

I also claim, in combination with the pile wires, a bar or guide which shall successively press against said pile wires to keep them in a proper position during the operation of cutting the pile, substantially as specified.

And I finally claim the method of applying the tension weight and brake directly to the whip roller by means of the arms g^6 and i^6, substantially in the manner and for the purpose specified.

ERASTUS B. BIGELOW.

No. 433.—*Improvement in Breech-loading Fire-Arms.*—I claim a cone-headed pin with two or more expanding rings, substantially as shown and described, for the purpose specified. And in making the exterior of a breech-pin, as described, cone-shaped, for the purpose as above set forth. Also combining the same with the radial or hinge-breech, substantially as shown and described.

B. F. JOSLYN.

No. 434.—*Improvement in Carding Engines.*—I claim, first, the application to carding engines of two or more variable cylinders arranged and operated in the manner substantially as herein set forth, for the purpose of preventing the filling up of the main cylinder.

Second. The use of a doffer, in combination with strippers or cleaners,

arranged and operating in the manner substantially as herein described, for the purpose of preventing the filling up of the main cylinder and producing an uniform sheet.

A. D. SHATTUCK.

No. 435.—*Improvement in Saw Mills.*—We claim the means above described to regulate the deflection of the saw blade when at work; that is to say, the application of the feed rollers to the back of the saw blade for the purposes as herein set forth.

We also claim the driving power to the lower pulley *b*, when the saw is designed to work in its downward motion, substantially as herein set forth.

WILLIAM P. WOOD.
SAMUEL DE VAUGHAN.

No. 436.—*Improvement in Looms for Weaving Pile Fabrics.*—I claim, first, successively drawing the pile wires from the cloth by a latch or hook, substantially as specified.

I also claim constructing and operating said latch or hook, so that after drawing said pile wires from the cloth, it successively delivers them to a carrier or other apparatus, which completes their movement, substantially as specified.

I also claim, in combination with a latch or hook for drawing the pile wires from the cloth, a carrier or apparatus to successively receive said pile wires from said latch or hook, and transfer them to the fell of the cloth, substantially as specified.

And I finally claim the method of inserting the pile wires into the upper shed of the warps, while the shuttle is passed through the lower shed, substantially in the manner, and for the purpose specified.

ERASTUS B. BIGELOW.

No. 437.—*Improvement in Running Gear of Carriages.*—I claim, first, the combination and arrangement of the pivot in the rear of the fore axle and the segments with the perch and head block or perch cross-bar of carriages having perches, as herein before described, or the equivalents thereto, for the purpose of enabling carriages to turn in a shorter space than by the common mode of coupling with perfect safety.

2d. I claim the additional set of segments or their equivalents, the pivot placed perpendicularly above the lower turning point, to be employed where the springs are fastened to the axle and move with the same.

GUSTAVUS L. HAUSSKNECHT.

No. 438.—*Improvement in the Machine for Sawing off Logs.*—We claim revolving a log or block while being sawed, in order that the pieces sawed off may be of uniform thickness on all sides, and the mechanism herein described, or its equivalent, for raising and lowering said block, that it may be sawed into pieces of any desired thickness without being removed from the machine, said block being centred but once in sawing up the entire log, substantially as herein set forth.

CORNELIA WATERMAN,
For WATERMAN & RUSSELL.

No. 439.—*Improvement in Sugar Works.*—I claim, first, the employment of a vacuum pan or pans in combination with an evaporating pan or pans or boiler in which the saccharine juice or other fluid is evaporated under a pressure lower, equal to, or greater than the atmosphere, which last mentioned pan or pans or boiler prepares the saccharine juice, &c., from the vacuum pan or pans, and at the same time supplies the necessary vapor from the saccharine juice, &c., to complete the evaporation or concentration of the syrup, &c., in the vacuum pan or pans, as fully described above.

Second. The employment of a weighted throttle or other regulating valve in the main steam-pipe, arranged and operating in the manner and for the purpose as herein before described.

NORBERT RILLIEUX.

No. 440.—*Improvement in the Machine for Forming the Web for Cloth, of Wool, Hair, or other suitable substance, without Spinning or Weaving.*

What is claimed is the mode of operation, substantially as herein described, by means of which the slivers of the weft fibres are kept properly distended until their entire surface is in contact with the surface of the sliver of warp fibres, substantially as described.

STILES CURTIS,
President of the Union Manufacturing Co., Norwalk, Conn.

No. 441.—*Improvement in Vault Covers.*—I claim grooving or channelling the upper surfaces of the metallic portions of illuminating covers, substantially in the manner and for the purpose herein set forth; but this I only claim when the glasses in said grooved covers are so arranged as to bring their upper surfaces flush with, or a little above, the upper surfaces of said covers, substantially as represented in the accompanying drawings.

JOHN B. CORNELL.

No. 442.—*Improvement in Setting Mineral Teeth.*—I claim a new and useful mode and improvement in setting mineral teeth on metallic plates, by means of a fusible mineral compound or cement which is used to fill up the interstices between and around the base of the teeth and upon the plate, of which a continuous artificial gum is formed without seam or crevice.

JOHN ALLEN.

No. 443.—*Improvement in Window Curtain Fixtures.*—I claim attaching the curtain to its roll by a piece or strip which fits into a groove in the roll and is secured thereto by caps at the ends, in the manner substantially as herein set forth.

SILAS S. PUTNAM.

No. 444.—*Improvement in Planing Machines.*—I claim, first, the combination of the rotary disk cutter with the pressure and bed, substantially in the manner and for the purposes herein described.

2d. I claim the combination of the Bramah wheel, so called, with the rotary disk cutter, and its accessories, for the purpose of planing, substantially as herein set forth.

3d. I claim the method of planing with a continuous drawing cut substantially as described.

JAMES A. WOODBURY.

No. 445.—*Improvement in Platform Scales.*—I claim my improved arrangement and combination of four bearing multiplying levers C C C C, a multiplying lever E, and a lever F, made as described, so as to act at the same time as an equalizing and a multiplying lever, the whole being applied to a steelyard weighing lever by means substantially as set forth.

I also claim arranging the suspension bridge so that its arched standards shall extend upwards by the sides of the platform, and between it and the sides of the pit, in manner as stated, in combination with arranging the transverse levers C C and their bearings below the platform, the same affording the necessary room for the vertical play of the longitudinal levers, while it secures an advantage as regards the depth of the pit, as stated.

THADDEUS FAIRBANKS.

No. 446.—*Improvement in Furnaces for Burning Wet Fuel.*—I claim using green bagasse, wet tan, wet sawdust, and other wet carbonaceous or vegetable substances, as fuel, for the production of intense heat, by mingling the gases issuing from a highly heated mass thereof with those arising from carbonaceous combustion, by the intervention of a flue or chamber, with which the chamber or chambers containing the fire and charge of wet substances communicate, and in which said gases meet, mingle, and consume each other on their way to the apparatus to be heated, and to the stack.

I also claim the combustion, for the purposes of a high degree of heat, of bagasse, refuse tan, sawdust, and other wet refuse substance, or very wet and green wood, by the employment of a series of fire chambers, arranged in any manner substantially as described, to communicate with one common flue or mixing chamber when any number of said chambers are nearly closed to the admission of air when first charged, as described, whilst the remaining chamber or chambers is in full communication with the mixing chamber, and has a proper supply of air admitted, and the ash-pit of each chamber, in its turn, is nearly closed, and then opened and has air admitted, whereby the heat required is rendered continuous and comparatively uniform, while the fuel in some of the chambers is being heated and decomposed, and its gases sent forward to the mixing chamber to any desirable degree, as herein set forth.

MOSES THOMPSON.

No. 447.—*Improved Portable Steam Cross-cut Sawing Machine.*—I claim the combination of a saw, and a direct acting engine for driving it, with an apparatus for securing the whole to the object to be sawed in such manner that the latter forms the support or basis by which the steam cylinder is maintained in the proper position.

SAMUEL R. WILMOT.

No. 448.—*Improved Carpenters' Gauges.*—I claim the invention and exclusive use of point holders, or holders for the points, markers, or cutters of gauges and instruments equivalent thereto, irrespective of any particular or definite form or kind of gauge, and irrespective of any definite form or kind of holder, means, or contrivance, having a screw thread cut within the same, and corresponding with a screw thread cut upon the said points, markers, or cutters, so as that the said points, markers, or cutters are operated within the said holders, to be raised or lowered through the instrumentality of the said screw threads within the said holders, and upon the said points, markers, or cutters of the said gauges, or instruments equivalent thereto, as herein set forth.

JOEL BRYANT.

No. 449.—*Improvement in Reaping Machines.*—I claim the combination of a vibrating scalloped cutter, the indentations of whose edge act as a series of moving shear blades, with slotted guard fingers, the sides of which act as a corresponding series of fixed shear blades, the parts of such fingers forming the slot, being connected at the front ends only, leaving the rear of the slot open and free for the escape of material that would otherwise clog the cutter, substantially as described.

OBED HUSSEY.

No. 450.—*Improvement in Reaping Machines.*—I claim the improved bevelling of the edges of the blades of scalloped sickles, as herein described.

OBED HUSSEY.

No. 451.—*Improvement in Reaping Machines.*—I claim the combination of a slot, formed between the long and short parts of the guard finger, with an opening in the rear of the short part, substantially as described.

OBED HUSSEY.

No. 452.—*Improvement in Sewing Machines.*—I claim regulating the tension of the thread, after it has been unwound from the bobbin, by means of apertures and bars within, upon, or through the thread case, either separate or combined, or by any equivalent means, when said means are within, upon, or form part of the bobbin case itself, for the purpose specified.

I also claim regulating the tension of the shuttle thread in the act of leaving the bobbin, by a combination of one or more screws with a spring or any yielding or elastic substances, or any combination of equivalent devices producing the same effect.

JOSEPH P. MARTIN,
Assignee of John A. Bradshaw.

No. 453.—*Improvement in Sewing Machines.*—I claim the covered shuttle to be used in a sewing machine, or, in other words, constructing that portion of the bobbin case which comes in contact with the

loop, cylindrical, or in any form which does not present edges in its transverse sections.

JOSEPH P. MARTIN,
Assignee of John A. Bradshaw.

No. 454.—*Improvement in Looms.*—I claim supporting the wag staff at its lower end, so that it may slide longitudinally in connexion with supporting it in other respects by a joint link, or its equivalent, applied so as to cause that part of the staff which strikes the shuttle to move in a line parallel or about parallel to the race beam, as specified.

And I also claim connecting the lower end of the two staffs below their fulcra, by means of a spring, having an intermittent action for drawing them back, in combination with the application of a positive motion above for driving the shuttle, whereby the returning staff aids in arresting the momentum of the shuttle, substantially as herein described.

WARREN W. DUTCHER.

No. 455.—*Improvement in Refrigerators.*—I claim placing shelves or fixtures for holding articles to be refrigerated, or the articles themselves, in the descending current directly under an open bottom ice box, in combination with a dividing partition open above and below, as set forth.

I claim, in combination with said shelves or fixtures so placed, constructing the open bottom of the ice box in such manner that the air may pass freely down through the same, and fall directly from the ice upon the articles to be refrigerated, while at the same time the drip of the water is prevented, as set forth.

D. W. C SANFOBD.

No. 456.—*Hinge for Picture Cases.*—I claim my improvement in the application of a hinge of a daguerreotype or picture case, moulded of a plastic material, or made of a frangible substance or substances, such hinge being made with each of its leaves bent twice, as set forth, and so applied to the halves of the box that it may not only embrace two contiguous sides of such halves, and be independent thereof, or not have any tenon or projection to enter the same, but may extend or lap over and be fastened to the top and bottom plates of said box, substantially as described.

A. P. CRITCHLOW.

No. 457.—*Improvement in Seed Drills.*—I claim the regulating at pleasure the quantity of seed discharged, by means of the transverse slides *f*, or their equivalent, in combination with the reciprocating slides E, as herein shown and described.

JAMES SELBY.

No. 458.—*Improved Saw Mill for Re-sawing Boards and other Lumber.*—I claim the mode of operation, substantially as herein described, of gauging, guiding, and presenting boards to the action of a saw, which mode of operation results from combining with a slitting saw

the mechanism, substantially as described, for gauging and guiding one face of the boards, and the mechanism for making a self-adjusting pressure, substantially as described, on the opposite face of the boards, so that the boards will be clamped between the two said mechanisms on opposite faces, and immediately in front of the cutting edge of the saw, so as to present the gauged face of the boards, however warped or bent they may be, in a plane parallel with the plane of the saw, as set forth.

And I also claim, in combination with a slitting saw, and the arrangement of the gauge and pressure rollers, substantially as described, connecting the said gauge and pressure rollers with the mechanism from which they derive motion by means of universal joints, substantially as and for the purpose specified.

And I also claim the method, substantially as herein described, of hanging and straining the saw by the combination of the three stirrups at the ends of the saw, constructed and connected in manner substantially as herein described.

PEARSON CROSBY.

No. 460.—*Improvement in Turn Tables.*—I claim balancing the platform of the turn table upon a transverse shaft, or other suitable bearing or bearings, resting upon or connected with the carriage which supports said platform, in such a manner that the table, when in a horizontal position or thereabouts, is elevated above its under supports or end bearings, to admit of its free swing, and so that the table may be depressed at either end, to bring the ends of its rails on either side of the carriage into line or level with the rails of the track for the purposes set forth.

JACOB C. ROBIE.

No. 461.—*Improvement in Looms for Weaving Brussels Carpets, &c.*—1st. I claim, in combination with the pile wire or wires for weaving piled fabrics, a grooved receptacle or trough for holding said pile wire or wires in position whilst being pushed into the shed of the warp, substantially as specified.

2d. I claim pushing said pile wire or wires into the shed of the warps, by a driver or pusher, substantially as specified.

3d. I claim guiding and supporting the pile wires as they are inserted into the shed of the warps, by a guide or guides through, over, or on which said wires slide, substantially as specified.

E. B. BIGELOW.

No. 462.—*Improvement in Machinery for Grinding and Polishing Metallic Surfaces, particularly Saw Plates.*—I claim, in combination with the rotary and traversing motion of a cylindrical lap or grinding or polishing surface, substantially as described, the reciprocating motion of the carriage which carries the plate to be reduced or polished at right angles to the traversing motion of the rotating lap or grinding or polishing surface, or, as the equivalent thereof, a rotary motion, substantially as described.

And I also claim constructing the said grinding or otherwise re-

ducing or polishing surface of a series of plates of any suitable substance, with spaces between the several plates, substantially as and for the purpose specified.

RICHARD M. HOE.

No. 463.—*Improvement in Hanging Shafts in Mills.*—I claim constructing the boxes for hanging shafting in mills, with circular cavities on the outer surface and on opposite sides, each cavity surrounding a bulb or projection in the form of a segment of a sphere, and having the required thickness of metal outside of such cavities for strength, as substantially described, when such boxes are combined with holding sockets which embrace said bulbs, and which are so placed within the said concavities as to allow the boxes thus held to play within the sockets in the manner of a universal joint, substantially as specified.

And I also claim combining the box, which is provided with segments of a sphere on its outer surface, substantially as specified, with the hanger, pedestal, or pillow block, by means of adjustable sockets, substantially as specified.

JOSEPH BANCROFT,
Executor of Edward Bancroft, deceased.

No. 464.—*Machine for Drying and Pressing Paper.*—1st. I claim the encasing of the cylinders in part, and attaching of brushes inside of said cases, and the application of sawdust or other proper substance for the purpose of cleaning the outer surface of the pressing cylinders, as specified.

2d. I claim combining two or more hollow steam or heated chests, at proper distances apart, so as to admit of the sheets of paper to pass between said chests free and unobstructed by means of endless belts, or their equivalents, for the purpose specified.

3d. I claim encasing the outer surface of the heated chests, as combined, by non-conducting substances, for the purpose of retaining the heat, as specified.

4th. I claim, in combination with the pressing cylinders, as herein described, the drying apparatus, consisting of heated chests, between which the sheets of paper are passed on tapes, or their equivalents, without touching or dragging thereon, as specified.

JOHN NORTH.

No. 465.—*Improved Cowl or Draught-Accelerator for Steamers.*—I claim their combination constructively, in the manner and for the purposes hereinbefore described and shown.

PETER C. GUION.

No. 466.—*Improvement in Grass Harvesters.*—I claim, 1st. Extending the shoe H G from the heel of the rack or finger-bar upward and forward, and firmly connecting its continuation with the draught, when the finger-bar is located as set forth, so that the power by which the machine is drawn shall, through the shoe, be communicated to and draw forward the heel of the rack or finger-bar, thus relieving the great strain which would otherwise come upon the lateral

nexions of the rack or finger-bar with the wheel frame, while the heel is enabled to slide over obstructions, substantially as shown.

2d. When the main wheel and inner end of the finger-bar or rack D are located relatively, as described, I claim continuing the shoe H G from the heel of the rack or finger-bar upward and forward until the upper end of its extension reaches a part of the machine which always runs above the mown grass, and which will keep the said grass down and prevent its rising over the point of the extended shoe, thus aiding the shoe to ride over the mown grass, even when accumulated before it, substantially as shown.

3d. Supporting the heel of the rack or finger-bar sufficiently near the ground and at a convenient distance laterally from the main wheel by arms extending upwards and forwards and upwards and backwards therefrom, and connected with the frame or strong bars firmly bolted across the frame in front and rear of the said rack or finger-bar, while the said frame and bars are elevated to pass over the cut grass, and the above parts are arranged substantially as shown.

4th. Supporting the rack or finger-bar at the side of and lower than the main frame by means of auxiliary framing in a fixed position at the side thereof, and extending downwards and forwards, so that while the finger-bar is held as near the ground as desired, and lower than the main frame, the main frame may be nearly horizontal in the line of draught and at any convenient height to avoid clogging or accommodate the diameter of the main wheel, as shown; such an auxiliary frame as a whole is shown in the drawings, composed of the bar C, rods E E I, and rack or finger-bar D; but its details may, of course, be varied, while the principle of my invention is retained.

5th. Supporting the rack or finger-bar D in its position at the side of and lower than the main frame by extending a strong bar C behind said rack or finger-bar, firmly supported by said frame, and rigidly connecting said rack or finger-bar to said bar C by a straight brace or braces E E; said frame being elevated and said bar being elevated and placed sufficiently in rear of said rack or finger-bar to avoid clogging or lodging of the mown or falling grass against either, when said parts are arranged in relation to each other substantially as shown.

6th. Supporting the outer end of the rack or finger-bar by a rod extending downwards and forwards from the cross-bar C to the finger-bar, parallel or nearly so to the face of the main wheel, when the frame and bar C are elevated above the rack or finger-bar, in the manner and for the purposes contemplated in the last claim, to avoid the falling or clogging of the cut grass against such rod, as set forth.

WILLIAM M. KETCHUM.

No. 467.—*Improvement in Gas-Burners.*—I claim combining the gas distributer B, or the same and the purifier C, as herein described, with the burner, so as to operate therewith substantially as set forth.

I also claim elevating the top of the orifice *a* for injecting the gas into the chamber of the burner above the base of said chamber by a cone, or its equivalent, and so as to form a channel around said orifice for holding tarry matter, as well as for removing it from the orifice.

And I also claim extending the orifice *a* into the distributor and among its wires, so as to attain advantages as above explained.

CHARLES H. JOHNSON.

No. 468.—*Improvement in Cast Iron Car Wheels.*—I claim the connecting of the rim of the wheel with the hub in cast iron car wheels, by means of two curved plates starting from near the ends of the hub and joining at a part of the distance between it and the rim, thus forming a hollow ring or arch around the hub, and joining said ring with the rim by a single plate, or its equivalent, for the uses and purposes above set forth.

ANSON ATWOOD.

No. 469.—*Improvement in Ships' Blocks.*—We claim passing the straps through grooves in the inner faces of the cheeks of the blocks, as herein described.

ISAAC D. RUSSELL.
CORNELIA WATERMAN,
For STEPHEN WATERMAN.

No. 470.—*Improvement in Locomotive Fire-Box.*—We claim the downward and rearward inclination of the top or roof, in combination with the flat grate surface and the usual feeding hole or door, and with or without the fuel feeding boxes through the roof, as herein described.

ROSS WINANS.
THOMAS WINANS.

No. 471.—*Improvement in Locomotive Tenders.*—We claim the tender, with an upper and lower platform, in combination with and for the purpose of feeding with greater convenience the furnace of a locomotive steam engine having upper and lower feeding holes, substantially as herein described.

ROSS WINANS.
THOMAS WINANS.

No. 472.—*Improvement in Means for Guiding Line Ferry Boats or Flying Bridges.*—I claim adjusting the boat A, relatively with the cable or rope *x x*, by the means herein described, or by any mechanism, when said mechanism is so arranged as not only to effect the adjusting or turning the boat, but also to retain it when adjusted, for the purpose set forth.

WILLIAM A. JORDAN.

No. 473.—*Improvement in Flouring Mills.*—I claim the tapering burr F, when covered with steel plates G, having teeth in disjointed lines and oblique with the axis of the burr, in combination with the steel pieces *h*, having also oblique teeth, but inclined in a contrary direction to those of the burr, and being dovetailed into projections cast to the shield H, the said projections forming longitudinal grooves *i*,

running lengthwise on the cone and crossing the inclined dress, substantially in the manner and for the purposes set forth.

JOSEPH WEIS.

No. 474.—*Improved Portable Field Fence.*—I claim connecting the panels or sections of a fence by the projection of one or more rails, in whole or in part, from one section or panel beyond the slats or battens, and between the slats and battens of the adjoining panel, and supporting and locking the fence by compound triangular braces, substantially as shown and described, and arranged with reference to the projection of the rails or their equivalent keys, for the purpose specified.

JAMES G. HUNT.

No. 475.—*Improvement in Looms for Weaving Piled Fabrics.*—First. I claim the method of transferring the pile wires in series from the cloth to the shed of the warps, substantially as specified.

Second. I also claim the method of successively cutting the rows of loops or pile on the pile wires, substantially as specified.

MERTONN C. BRYANT.

No. 476.—*Improvement in Machines for Manufacturing Hat Bodies.*—What is claimed is, the method of felting hats, by passing them or rolling them between the revolving endless planking table and a series of rollers, as described, or their equivalents, whereby a vibrating, reciprocating, and forward motion is communicated to the hats, thereby working it up in a perfect manner; but this we claim only when the vibrating and reciprocating motion is communicated to the hats in the direction of the revolving motion of the travelling belt, so as to give the hats a rolling motion, alternately forward and back, as they pass through the machine.

JAMES S. TAYLOR.
HIRAM L. STURDEVANT,
Per JAS. S. TAYLOR,
Administrator.
ELIJAH STURDEVANT,
Per JAS. S. TAYLOR,
Attorney.

No. 477.—*Improvement in the Method of Cutting out the "Uppers" of Boots and Shoes.*—We claim the cutting or otherwise making the leather or other material to form the upper of a boot, by folding, without crimping, of the form substantially as shown in figure 4, and having its characteristics herein fully described, whether the said form be produced by a single piece of material or by the union of two or more pieces.

JOHN CHILCOTT.
ROBERT SNELL.

No. 478.—*Improved Bomb for Killing Whales.*—We claim, first, inserting the end of the fuse through a short holding pipe or collar *e*,

and securing it firmly therein by compressing the same; and the driving or forcing this within the end of the fuse pipe having a conical enlargement at its rear end.

Second. Enlarging the end of the fuse cord by winding it with twine, or its equivalent, so that it cannot be drawn through the pipe, and inserting it in the fuse pipe, either with or without the fastening pipe *e*; and putting gypsum, brimstone, or wax, around it within the nut A to hold it securely.

Third. We claim the application of the sliding collar *h* on a projectile carrying a cylindric metallic plate, covering the projectile, and either slit to form wings *k*, or unslit as a cylinder case, and so constructed that the said collar with the case or wings shall slide to the rear after being discharged from the gun, either by the action of the spring or the resistance of the air to guide its direction.

Fourth. We claim so constructing and applying these wings *k* that they may coincide with the cylindric surface of the projectile while in the gun, and that their rear ends may be thrown up therefrom by their elasticity after being discharged, so as to stand in positions diverging from that surface in the rear.

Fifth. The application of helical or spiral springs S on the surface of a projectile, to force to the rear a collar *h*, (either with or without the guides *k*,) after leaving the gun, substantially as described.

NATHAN SCHOLFIELD.
WILLIAM W. WIGHT.

No. 479.—*Machine for Bending the Lips of Wrought Iron Railway Chairs.*—What is claimed is, first, a suitable support for a chair blank, in combination with bending levers or a bending apparatus, and a former, or the equivalents thereof, acting in combination, substantially as specified herein.

Second. A drop hammer, or its equivalent, in combination with bending levers, a former, and a suitable support for the chair blank, or their equivalents, all substantially such, and acting in combination, substantially in the manner hereinbefore set forth.

JACOB ROWE, [L. S.]
President of the Railroad Chair Co.

No. 480.—*Improved Method of Making Wire-Strengthened Spoons.*—I claim casting the spoon handle in a mould of larger dimension than the finished handle is required to be, as herein set forth, and subsequently swaging the handle into the proper shape, and condensing the metal upon the strengthening wire, by means of the drop press and dies, as described.

CHARLES PARKER.

No. 481.—*Improvement in Distributing Apparatus of Flouring Mills.*—I claim the double series of spouts and valves arranged and connected with the bolting chamber, substantially as herein set forth.

I also claim the arrangement of the conveyor A, in combination with a double series of valves and spouts, as set forth.

ALFRED T. CLARK.

No. 482.—*Improvement in Rice Hullers.*—I claim operating the pestle by having it attached to a rod passing through the bottom of the mortar, and receiving motion through a crank, or its equivalent, substantially as and for the purpose and object herein set forth.

PETER MCKINLAY.

No. 483.—*Improvement in Boot Crimps.*—I claim the manner above described of arranging the block A and clasps C, so that the turning up of the straining screw shall at the same time perform the double operation of confining the ends of the leather between the block and clasp, and of stretching the leather over the boot-form, the whole being substantially as above specified.

J. M. READ.

No. 484.—*Improvement in Reed Musical Instruments.*—I claim so connecting the board which contains the reed seats or perforations for the reeds with the exhausting bellows, that it shall form substantially a part of the stationary leaf or cover of the exhaust chamber thereof, while the exhausting or pumping chamber is placed in immediate connexion with the said exhaust chamber without the intervention of tubes; thus improving the tone of the reeds, expediting their speaking, and giving a compact, light, convenient, and graceful form to the instrument, substantially as described.

I also claim the reed cells, in combination with the reed seats or openings, substantially as described.

I also claim the concentrating chamber, in combination with the reed cells and reed seats, substantially as described.

I claim the last two combinations specified, only when they are to be used with a suction or exhaust bellows, capable of producing a continuous current of air through the reed opening, as set forth.

J. CARHART.

No. 485.—*Improvement in Glass Journal Box.*—I claim a journal box, composed of a metal shell or body and anti-friction lining surface of vitreous material, when said vitreous material is combined with its metal back, substantially as and for the purposes set forth.

EDWARD CAMPBELL.

No. 486.—*Improved Automatic Regulator for Wind Wheels.*—1st. I claim the combination and arrangement of the air passages F, with the peculiar devices herein fully described; for the purpose of making a self-regulating wind wheel, as set forth.

2d. I claim the swinging wing *g* and slide *l*, arranged as set forth, and operating in the manner described.

3d. I claim the peculiar arrangement of slats *s*, cord *d*, and weight *c*, when operated in the manner and for the purpose set forth.

JOSEPH DUNKLEY.

No. 487.—*Improvement in Ovens.*—We claim, 1st. The combination of flues and furnaces, substantially such as are hereinbefore specified, with an endless apron, or its equivalent, substantially in the manner

hereinbefore described, whereby the amount of heat imparted to either side of an apron or chain may be regulated independently.

2d. In combination with an endless apron and oven, or their equivalents, discharging and charging apertures, located substantially as hereinbefore set forth, in such manner that dough may be charged and withdrawn in lines perpendicular, or nearly so, to the line of motion of an endless apron.

WILLIAM E. TREADWELL,
WILLIAM HUSTACE,
Executors of Ephraim Treadwell, deceased.

No. 488.—*Improvement in Capstans for Steamboats.*—I claim the drum C on the shaft of the capstan B as arranged, the capstan being steam driven by geared shafting connecting it with the "little nigger," and the whole being combined and made operative through the pulley I, substantially in the manner and for the purpose described.

JOHN SCHAFFER.

No. 489.—*Improvement in Looms.*—1st. We claim employing the positive take-up mechanism or cloth roll, or any mechanism acted on or affected by the strain of the cloth when a positive take-up is used, as the point through which the variable strain and wind of warps is made to act more sensitively than from or by the variable vibratory re-acting motion of the whip rolls or sudden jerking of the beam or movable reed.

2d. Effecting and producing a regular delivery and uniform strain of the warps, by the equalizing strain lever P, or equivalent; said lever being acted upon by the variable strain of the warps or cloth through the positive take-up mechanism or cloth roll, as represented.

3d. The equalizing strain lever P, or analogous device, when operating in connexion with the positive take-up mechanism or cloth roll, or when effected by the strain of the cloth, in combination with any mechanism for producing rotary motion to the beam, and with any device or means for regulating the delivery and strain of the warps as the beam decreases in diameter and as the desired strain requires.

4th. Employing the rod T with the pen X, or equivalent, to act upon the strain lever P as a means of moving the weight K when the balance spring S, or equivalent device, is not sufficient to move it.

5th. In combination with the pulley F and pinion C, we claim the movable weight K, the fixed or yielding sectional friction piece G, and friction lever J, as and for the purpose represented.

6th. In combination with the weight K and friction lever J, we claim the rack N, or its equivalent, to so act upon weight K, through catches L, or analogous devices, as to gradually move this weight K towards the fulcrum of lever J as the beam decreases in diameter and as the desired strain of warp requires.

7th. In combination with the weight K and friction lever J, or equivalent devices, we claim the jointed or stationary sectional friction piece G and set screw H, as and for the purpose represented.

DANIEL W. SNELL.
STEPHEN S. BARTLETT.

No. 490.—*Improvements in Carding Machines.*—What I claim is, suspending the top flats or workers upon pivots in the centre of their ends, by which they can be raised out of the way of the adjoining flats and turned by a rack working into pinions, or the equivalent thereof; the whole being constructed and arranged substantially as herein described, for the purpose set forth.

I also claim stripping the flats or workers by a rotating brush, so arranged that a card may strip the brush and return the strippings to the main cylinder, substantially in the manner and for the purposes described.

I also claim the combination and employment of two or more "lickers-in," acting as "lickers-in" and "workers," by running in contact with each other, or their equivalent, for the purpose of working the fibre before it enters on to the main cylinder, in the manner specified and for the purposes set forth.

W. H. WALTON.

No. 491.—*Improvement in Roofing Compositions.*—I claim the use of lime, in combination with the rubber or gutta percha and shellac solutions in the composition, as set forth and for the purpose specified.

JAMES WEST.

No. 492.—*Improvement in "Elastic Gore Cloth."*—I claim, as an improved manufacture, an elastic band or gore cloth, when made not only of a fabric composed of a cement of India rubber or gutta percha and two pieces of cloth, in which the warp and weft of each piece are made to cross one another diagonally or at acute angles, but with the edges of the cloth cut and overlapped and cemented down in a line or lines out of parallelism with either the warp or weft threads, the line of maximum elasticity in the binding making that angle with the warp as well as the weft which is the complement of half the angle which they make with each other.

CHARLES WINSLOW.

No. 493.—*Improved Abdominal Supporters.*—I claim the bandage *a*, substantially as described, provided with a series of cords *g* and laces *b*, or their equivalents, applied and operated substantially in the manner and for the purposes set forth.

JULIA M. MILLIGAN.

No. 494.—*Improvements in Looms.*—I claim, first, mounting a loom with two distinct sets of harness, each governing all the warp threads, for the weaving of a web on one side of an intended button hole or slit, and capable of being thrown out of action, each by itself, while the other set is in action during the process of weaving button holes, substantially in the manner and for the purposes hereinbefore specified.

Second. I claim connecting each set of harness capable of being thrown in and out of action, and governing all the warp by a cam or catch, or the equivalents thereof, to throw one or the other of the said sets of harness out of action when necessary, substantially as described.

Third. I claim the combination of the mechanism hereinbefore described, for causing one set of harness to cease its action, or any equivalent therefor; with another mechanism substantially such as is hereinbefore described, for determining the periods during which one set of harness shall remain out of action or lie dormant, or the time or moment at which such harness shall cease to act, or any equivalent therefor, the combination acting substantially as and for the purposes set forth.

Fourth. I claim the combination of a slow-moving cam or cams, or its or their equivalent, for determining the time and period, or time or period, during which a set of harness shall be out of action, as hereinbefore set forth; with harness substantially such as is hereinbefore described, mounted in sets, each set governing all the warp threads on one side of a button hole, so that different sets of harness may be in action or lying dormant at proper times and for proper periods, for purposes substantially such as are described.

Fifth. I claim a contrivance, substantially such as is herein specified, for throwing the take-up motion out of gear, or any equivalent therefor, for stopping the take-up, in combination with two sets of harness, each governing warp-threads, substantially as hereinbefore set forth, the combination acting substantially in the manner and for the purposes described.

And, lastly, I claim the combination of a slow-moving cam, substantially such as is specified, or any equivalent thereof, with a mechanism for stopping or starting a take-up motion, substantially such as is herein described, or any equivalent therefor, whereby the time and period, or time or period, of the stoppage or cessation from action of a take-up motion may be determined automatically, for the purposes substantially as set forth.

W. V. Gee.

No. 495.—*Improvement in Apparatus for Stencilling Window Shades.* What I claim is, first, producing patterns on window shades, in which long or continuous lines form a prominent feature, by means of a pair or pairs of stencils, of the full size of the design, prepared substantially in the manner herein set forth.

Second. The mode of registering the stencils by the use of the plates *e* and pins *c*, for the purpose of adjusting and readily adapting the stencils to shades, as herein specified.

Daniel Lloyd,
For Gibbons L. Kelly.
Dudley M. Ferguson,
Assignees of entire right.

No. 496.—*Improvement in Coating Water Pipes.*—What I claim is, lining metallic pipes with hydraulic cement, by means of a cone, or its equivalent, guided through the pipe so as to lay on the cement of equal thickness and with great certainty and economy, substantially as described.

Jonathan Bail.

No. 497, B.—*Improvement in Cast Iron Car Wheels.*—What I claim is, connecting the rim of a wheel cast in one piece with a solid hub by means of a single waved plate, in combination with the dished flanch or flanches of the hub, forming a ring concentric with the rim of the wheel, substantially as described, whereby the several parts can yield to the unequal contraction in all directions without strain of the metal.

ANSON ATWOOD.

No. 498, C.—*Improvement in Cast Iron Car Wheels.*—What I claim is, a cast iron disk, corrugated in the manner substantially as and for the purposes described, when used in connexion with the chilled rim of a cast iron wheel.

ANSON ATWOOD.

No. 499.—*Improvement in Seed Planters.*—What I claim is, first, in combination with a machine that drops its seed automatically, a hand lever and clutching apparatus, that enables the operator to quicken or retard the dropping, so as to bring it to the exact spot, substantially as herein described, and without disarranging or injuriously affecting the automatic movement.

I also claim, in combination with the wheel S, having its centre of motion at *e*, and furnished with openings *i*, the lever *m*, with its plate *p*, and hung or pivoted at a point eccentric to the point *e*, so that the plate *p* can cover or be drawn within the range of the openings *q* at stated intervals, substantially as set forth.

I also claim the employment or use of the indicator b^1, connected with the valve U, and arranged and operated as shown, and for the purpose herein set forth.

SOLOMON T. HOLLY.

No. 500.—*Process for Removing Photographs from Glass to Paper.*—What I claim is, the herein described use of beeswax, or its equivalent, laid upon the surface of the glass plate previous to applying the collodion film, chemicals, and colors, as herein described, for the purpose of facilitating the removal of the picture; together with the manner of causing the backing paper to adhere to the finished picture, thus giving it strength to overcome the adhesion of the wax, or its equivalent, to the plate of glass, in the manner specified.

EDWARD HOWELL.

No. 501.—*Improvement in Ladies' Skirts.*—What I claim is, constructing hoops intended for ladies' dresses, substantially as and for the purposes set forth, consisting of a spiral formed of any proper material, metallic or vegetable, as described, either with or without a core to support the same, which can be bent into the form of a hoop, and inserted into ladies' skirts, as herein fully made known.

EDWARD F. WOODWARD.

No. 502.—*Improvement in the Manufacture of Sulphuric Acid.*—I claim the process of preparing native metallic sulphurets by pulver-

izing them and mixing them with the substances above described, in order to extract all, or nearly all, the sulphur from them, for the purpose of making sulphuric acid.

ALFRED MONNIER.

No. 503.—*Improved Locomotive Lamp.*—What I claim is, first, constructing the can B with several compartments in communication with each other, substantially as and for the purpose specified.

Second. The combination of the perforated inverted cone *b*, cap F, funnel *d*, and perforated tube *c*, constructed, arranged, and operating as hereinbefore set forth, for admitting air to the can and preventing the slopping of oil from the vent.

J. A. WILLIAMS.

No. 504.—*Improvement in Cordage Machinery.*—What I claim is, first, the method herein described of equalizing the paying out of the strands from the bobbins, for the purposes set forth.

Second. The arrangement of a friction or rubbing collar *m*, operated by a plunger *o*, passing upward within the supporting stem *b* and the weighted lever *p*, as described, or equivalent devices, for regulating the degree of facility of the rotation of the bobbin spindles.

HENRY PEARCE.

No. 505.—*Improvement in the Manufacture of Iron.*—What I claim is, blowing blasts of air, either hot or cold, up and through a mass of liquid iron, (the oxygen in the air combining with the carbon in the iron, causing a greatly increased heat and ebullition in the fluid mass,) and decarbonizing and refining said iron without the use of fuel.

WILLIAM KELLY.

No. 506.—*Improvement in Ploughs.*—What I claim is, the curved standard, with its front or concave side rounded off, and its curved surface extended to intersect the mould board along its upper edge *x x x*, substantially as and for the purposes set forth.

GEO. WATT.

No. 507.—*Improvement in Diaper Pins.*—What I claim as the invention of the said Joshua Heilmann is, the combination of the sliding curved pin C with the shield or case A, substantially in the manner and for the purposes herein described.

IGNATIUS STURN.

No. 508.—*Improvement in Seed Planters.*—What I claim is, in combination with the hinged frames or hinge joint, the locating of the conductor's or driver's seat in rear of the supporting axle, so that, as he moves forward or back on his seat, the rear frame may act as a lever for lowering or raising the seeding part of the machine, and thus throw it into or out of the ground, as circumstances may require, in turning around or for passing over any obstruction, substantially as set forth.

GEO. W. BROWN.

No. 509.—*Improvement in Carding Machines.*—What we claim is, the application of two or more sets or pairs of feeding rollers to the working cylinders of carding engines, substantially in the manner and for the purpose set forth; and this we claim whether said feed rollers deliver the material directly on to the main cylinder or to lickers-in, when said lickers-in are so arranged as to work in connexion with each other and with the main cylinder, for the purpose and in the manner substantially as set forth.

We also claim the reversing of the relative velocities of the peripheries of the main working cylinder and stripper M at intervals by an automatic movement for the purpose of cleansing or preventing the clogging of the main cylinder, substantially as described.

HORATIO N. GAMBRILL.
SINGLETON F. BURGEE.

No. 510.—*Improvement in Watches.*—What I claim is, the arrangement of the barrel in respect to the pillar plate, so that it shall extend through the plate and be fastened to the dial side of it.

I also claim arranging the main gear wheel with the retaining power and barrel arbor, so that the said wheel shall serve the purpose of a barrel head or cover to the barrel.

I also claim the application of the retaining power directly to the fixed barrel, substantially as specified.

GEO. P. REED.

No. 511, A.—*Improvement in Grain and Grass Harvesters.*—What I claim is, the combination of the platform, the driving gear, the space between the platform and driving gear for the discharge of the gavel, the draught pole, and the stand or rest on the platform for the forker, when the same are arranged substantially as described.

WM. H. SEYMOUR.

No. 512, B.—*Improvement in Grain and Grass Harvesters.*—What I claim is, the combination with the stand or rest W, upon the rear side of the platform, for the person who rakes off the grain, and with the platform of a strong rail V firmly secured to the outer side of the main frame, and extending thence along the rear side of the platform to support it, and the stand for the forker, substantially as herein set forth.

WM. H. SEYMOUR.

No. 513, C.—*Improvement in Grain and Grass Harvesters.*—What I claim is, the method herein described of protecting the gearing from being injured by the working and twisting of the main frame, by mounting the said gearing in an auxiliary metallic frame, constructed and firmly attached to the main frame, as herein described.

WM. H. SEYMOUR.

No. 514.—*Improvement in Cleaning Top Cards of Carding Machines.*—I claim, first, the application and adaptation of the grooved cam, arranged with a sliding bar, substantially as specified, or the

equivalent therefor, as a means of producing the reciprocating motions by which the raising and depressing of a top card, or the reciprocating movements of the brush bar in cleansing a top card, may be effected.

Second. I claim the combining of lifter cams T T and a brush bar V with one rotary shaft R, so that, by the movements of such shaft in the manner specified, the operations of raising and depressing a top card and cleansing it may be effected in the manner set forth.

HORACE WOODMAN.

No. 515.—*Improvement in Wheels for Carriages.*—What I claim is, the rim of the hub, which is made in sections, which, being constructed in this manner, will press on all the spokes and hold them all firm in the hub; and their on plate which covers these sections, which will bend and let the sections fit the spokes, with the pressure of the screws, and holds the sections to their places; and the nuts on the spokes, which holds the fellies and the tire to their proper places.

THOMAS BROWNFIELD.

No. 516.—*Improvement in Automatic Grain Weighing Machines.*—What I claim is, first, the combination of the tripping rods *s* with the valve plate N and knuckle braces *i* and *j*, whereby the movement of the valve gate L (which is operated by means of scale beams F) causes the contents of the buckets E to be discharged alternately, as set forth.

Second. The knuckle braces *i* and *j*, in combination with the trapdoor *m*, whereby the latter is spontaneously closed and fastened immediately after the grain is discharged, as set forth.

Third. The balance beams F, with horns I, in combination with valve plate N and catch levers T, so arranged that the weight of grain in one bucket changes the position of the valve gate so as to turn a portion of the current of the grain into the other bucket; before the first bucket receives the quantity, the second horn trips the catch, and thereby turns the balance of the current of the grain into the other bucket, as set forth.

RUFUS PORTER.

CLAIMS OF ADDITIONAL IMPROVEMENTS GRANTED DURING THE YEAR 1857.

[ILLUSTRATED BY ENGRAVINGS.]

No. 158, to original Letters Patent No. 16,244.—*For Improvement in Harvesting Machines.*—I claim allowing the roller *c* to come against an elastic or yielding stop, when the machine returns to its position, after passing any inequality in the ground, for the purpose of saving the machine from sudden jars, as set forth.

ROBERT J. MORRISON.

No. 159, to original Letters Patent No. 13,724.—*For Improvement in Looms.*—I claim the change in the relative position of cams 2 and

4—6 and 8, in the manner and for the purposes substantially as set forth in the above specification.

JAMES O. LEACH.

No. 161, to original Letters Patent No. 15,521.—*For Improved Fire-Arm.*—I claim the employment of a permanent cone, combined with a ring lying between it and the chamber of the barrel with a disk fitted upon the ring, the ring being divided on one of its sides by a cut, into which is fitted a pin or wedge; the cone and wedge being so shaped in reference to the ring as to expand it against the charge chamber upon the least reaction of the charge when fired.

FREDERICK D. NEWBURY.

No. 162, to original Letters Patent No. 15,646.—*For Improved Filter.*—I claim, 1st. So constructing that part of the filter to which the filtering medium is attached, and providing it with a seat in the case, that it may be raised from said seat or turned upon it, so that the water shall be free to pass in from the faucet, through and around the filtering diaphragm, in such manner as to wash away the impurities from the surface of the diaphragm, substantially as described, also to relieve the force of the stream of water when drawn without filtering.

2d. I also claim, in combination with the ring *i*, the flange *n*, for holding in their place the additional layers, substantially as set forth.

3d. I claim the grooves on the outer surface of J, in combination with the ring, whether separate or continuous, like the thread of a screw, with or without a corresponding inside screw formed in the ring for greater certainty in holding the diaphragm, also the rebate shown in fig. 10, so that the ring may reach a little below the largest part of J, at *f* and *h*, for the same purpose.

DAVID N. B. COFFIN, Jr.

No. 163, to original Letters Patent No. 15,201.—*For Improvement in Safety Hatches for Warehouses.*—We claim the opening and closing of vertical doors attached to the tube or box of an elevator, by means of the action of the traversing car or platform and its attachments, as herein fully set forth.

WM. H. THOMPSON.
EUSTIS P. MORGAN.

No. 164, to original Letters Patent No. 14,851.—*For Improved Farm Gate.*—I claim the arrangement and combination of the levers B and C with the ropes or chains F F and platforms A A, they forming a self-acting or balance gate, as fully set forth in the foregoing specification.

CHARLES N. COLE.

No. 165, to original Letters Patent No. 13,188.—*For Improvement in Spring Bed Bottoms.*—I claim arranging and combining with such bars and springs, substantially as specified, flexible bands or strips *g g*, or analogous devices, so that the several bars and springs may be connected and made to operate together substantially as specified.

HIRAM TUCKER.

No. 166, to original Letters Patent No. 10,087.—*For Improved Cutter for Boring Wheel Hubs.*—1st. I claim an additional reamer, in connexion with the shaft *c*, for the purposes set forth.

2d. I claim a serrated, notched, sickled, or ragged edge of reamers or cutters, as at *y y* and *w w*, for the purposes set forth.

LEONARD S. MARING.

No. 167, to original Letters Patent No. 13,731.—*For Spoke and Axe-helve Machine.*—I claim the jointed guides having slots *c d e*, in combination with the slots *f g h* of the bed, and bolts securing said guides to the bed; the aforesaid slots having the relative position hereinbefore set forth.

OWEN REDMOND.

No. 168, to original Letters Patent, No. 14,339.—*For Improved Sawing Machine.*—I claim the vertical guides D and guide rollers *m* and *n*, in combination with the swivel link saw bearings I, arranged and operating in the manner set forth.

WILLIAM P. WOOD.

No. 169, to original Letters Patent, No. 11,069.—*For Improvement in Winnowing Machines.*—We claim the arrangement of the inclined perforated diaphragm S^2 within the removable blast trunk C, as and for the purposes set forth.

JOSEPH KEECH.
STEPHEN STILWELL.

No. 170, to original Letters Patent, No. 16,402.—*For Improved Box Fitting Apparatus.*—I claim, in combination with the boring shank or shaft, the collar A with its double flanges *o o*, one above and the other below the frame C; the holes *c* and the stop E; the whole being arranged to operate in the manner and for the purpose specified.

JOHN SHAERER.

No. 171, to original Letters Patent, No. 15,521.—*For Improved Fire-Arm.*—I claim the placing of the tape priming within the chamber of the arm D, and operating the priming by the movement of the arm, through and in combination with the ratched rod and spring *x*, and pawl spring *u*, or their equivalents, substantially as set forth in this specification.

F. D. NEWBURY.

No. 172, to original Letters Patent No. 12,217.—*For Improvement in Machine for Kneading Dough.*—I claim so forming the kneading wings that they shall in their revolution present alternate concave and convex surfaces to the dough, substantially as and for the purpose specified; and this I claim, whether these concave and convex surfaces are obtained by revolving blades alone, or by a revolving blade or blades in connexion with a pressing roller, as herein set forth.

J. L. ROLLAND.

No. 173, to original Letters Patent No. 17,422.—*For Improvement in Packing Pistons and Stuffing Boxes of Steam Engines.*—I claim the above described foil packing with cloth cemented or otherwise fastened on one or both sides of it, in the manner described and for the purpose named.

PATRICK CLARK.

No. 174, to original Letters Patent No. 9,870.—*For Improvement in Gutta Percha Stereotype Compositions.*—I claim the compound of gutta percha, gums, and metallic powders, herein described, combined as herein set forth, and for the purposes herein mentioned.

LEONARDO WESTBROOK.

No. 175, to original Letters Patent No. 16,965.—*For Improvement in Hoisting Winches for Ship-Board.*—I claim the invention and use of winches (or compound winches) for hoisting, constructed and operating substantially as described and set forth in the original and in this additional description and specification of new and additional improvements in winches.

JOEL BRYANT.

No. 176, to original Letters Patent No. 16,405.—*Improved Mechanism in Looms for Weaving Cloth.*—We claim, first, the application of the worm gear F, in combination with the pinion shaft E and pinion C, as and for the purpose represented.

Second. The spring H, acting as shown, for the purpose of giving a yielding motion to the beam at the change of harnesses and beating up of the reed.

DANIEL W. SNELL.
STEPHEN S. BARTLETT.

No. 177, to original Letters Patent No. 17,436.—*For Improvements in the Consumption of Smoke in Locomotive Engines.*—What I claim is, the fire-box extended into the barrel of the boiler, in combination with transverse fire-brick bridges, and with water-bridges or chambers fitted with tubular stays, through which a fresh supply of air is admitted to the combustion chamber, or extended portion of the fire-box, for the purpose of assisting the combustion, and of preventing the formation of smoke, substantially as set forth.

J. E. MCCONNELL.

No. 178, to original Letters Patent No. 13,807.—*Improvement in Straw Cutting Machines.*—What I claim is, the arm K K and adjustable cross piece *c*, and hinged plate *s*, or, severally, their equivalents, when vibrating or oscillating in connexion with the knife, substantially in the manner and for the purpose set forth. I also claim the hinged or jointed knife-bed G, in combination with the arms K K and crank shaft J, by which means the knife is made to reciprocate in a line parallel with the arms K K, for the purpose of preventing the edge of the knife from picking or scraping on the bed against which it cuts.

LOREN J. WICKS.

No. 179, to original Letters Patent No. 17,147.—*Improvement in Inkstands.*—What I claim is, the straight tube *d*, in combination with a simple cup or receptable E, substantially as and for the purposes described.

KINGSTON GODDARD.

No. 180, to original Letters Patent No. 14,877.—*Improvement in Portable Chairs.*—What I claim is, the jointed braces I and the strap P, so constructed and operated on the chair or other article that, by opening it, the legs will be swung outward and firmly held by the straightening and holding and setting the joints of these braces, essentially in the manner and for the purposes fully set forth.

I claim the peculiar arrangement and operation of the springs Q, to start or commence folding the braces I, or for unsetting the joints, substantially in the manner and for the purposes fully set forth.

ZEBULON LYFORD.

No. 181, to original Letters Patent No. 8,884.—*Improvement in Winnowers.*—What I claim is, the employment of an extended or elongated uppermost riddle No. 1½, diagram L, formed as set forth, and combined with the double sloping top screen No. 1, diagram M, said screen No. 1 being provided with the longitudinal central strip or supporting ridge rail d^2 a^2: the whole of said devices arranged, combined, and operated substantially in the manner as set forth and described.

THOMAS J. DOYLE.

No. 182, to original Letters Patent No. 14,586.—*Improvement in Skates.*—What I claim is, casting in one piece the bar A, heel plate B, and loop e^1, having a point *g* which assists to support the bar A.

2d. I claim forming the obtuse angles *a b c*, and a^1 b^1 c^1 of the bar A, to prevent the stock or wood of the skate from separating, substantially as described and shown in the drawings.

FERDINAND KLEIN.

No. 183, to original Letters Patent No. 17,176.—*Improvement in Bag or Sock Holder.*—What I claim is, the cast iron clamp or clasp and its adjustment, substantially as set forth.

AUGUSTUS STONER.

DISCLAIMERS ENTERED DURING THE YEAR 1857.

Letters Patent No. 491, dated November 25, 1837.—Re-issue No. 247, dated September 13, 1853.—*Improvement in the Figure Power Loom.*—Your petitioners, therefore, hereby enter their disclaimer to that part of the aforementioned specification which commences: "The position I [illegible] ends "principle of my invention," being [illegible] to the last paragraph thereof, and

also to the *fifth*, *seventh*, and *eighth* claims of said patent; which disclaimer is to operate to the extent of the interest in said letters patent vested in your petitioners, who have paid ten dollars into the treasury of the United States, agreeably to the requirements of the act of Congress in that case made and provided.

M. A. FORBUSH.
GEORGE CROMPTON.

Letters Patent No. 3,895, dated August 31, 1845.—*Improvement in Reaping Machines.*—Your petitioner, therefore, prays that he may be permitted to, and does hereby, enter his disclaimer to that part of the claim in the said specification which is in the following words to wit: "I claim the reversed angle of the teeth of the blade in manner described;" which disclaimer is to operate to the extent of the entire interest in the said patent, no assignment having been made at any time of any portion of the exclusive right granted thereby; your petitioner having paid ten dollars into the treasury of the United States, agreeably to the requirements of the act of Congress in such case made and provided.

C. H. MCCORMICK.

Letters Patent No. 17,096, dated April 21, 1857.—*Improvement in Illuminating Vault Covers.*—Your petitioner, therefore, hereby enters his disclaimer to the feature covered by the aforesaid claim, save when it shall be qualified by the following explanation, viz: But this I only claim when the said glasses and the illuminating with which they are combined are of such a shape that the inclined surfaces of the pyramidal or polygonal portion of the glasses descend partially or entirely below the under surface of the sash or metallic portion of said frame, for the purpose of enabling said glasses to widely diffuse the light which may pass through them, substantially as herein set forth.

The above disclaimer is to operate to the extent of the entire interest in the aforesaid letters patent vested in your petitioner, who has paid ten dollars into the treasury of the United States, agreeably to the requirements of the act of Congress in that case made and provided.

G. R. JACKSON.

CLAIMS OF EXTENSIONS GRANTED DURING THE YEAR 1857.

Letters Patent No. 3,016, March 21, 1843.—*Improvement in Burning Bricks.*—What I claim is, the particular arrangement and combination of the flues, dampers, and fire compartments therein; there being a double flue along the centre, from which lateral flues branch off in a curved or angular manner, so as to admit of the employment of dampers in each, in the manner herein represented and made known.

JOEL W. ANDREWS.

Letters Patent No. 3,092, dated May 19, 1843.—Re-issue No. 438, dated March 17, 1857.—*Improvement in the Machine for Sawing off Logs.*—We claim revolving a log or block, while being sawed, in order that the pieces sawed off may be of a uniform thickness on all sides; and the mechanism herein described, or its equivalent, for raising and lowering said block, that it may be sawed into pieces of any desired thickness without being removed from the machine, said block being centred but once in sawing up the entire log, substantially as herein set forth.

CORNELIA WATERMAN,
For WATERMAN & RUSSELL.

Letters Patent No. 3,114, dated June 1, 1843.—*Improvement in Corn Shellers.*—I claim the arrangement of the inclined concave and toothed cylinder, as described, and in combination therewith the angular piece *a*, the whole being constructed and operating as above described.

FRANCIS N. SMITH.

Letters Patent No. 3,117, dated June 1, 1843.—*Improvement in Fire-Proof Chests and Safes.*—I therefore claim the application and use of plaster of paris, or gypsum in its raw state, or prepared as above, either alone or with mica, in the construction of all iron chests or safes, in the manner above described, or in any other manner substantially the same.

DANIEL FITZGERALD.

Letters Patent No. 3,168, dated July 12, 1843.—*Improvement in Cast Iron Pavement for Streets.*—I claim the manner of using iron in the pavement of streets by means of boxes connected by flanges or keys and commissures, and divided into small sections which leave openings or interstices, as above described and shown in the drawings annexed, to be filled inside and between the rims with any composition which may be best adapted to the purpose—using for that purpose boxes of any form divided into sections in any manner which will produce the intended effect.

W. D. TERRY.

Letters Patent No. 3,237, dated August 26, 1843.—Re-issue No. 439, dated March 17, 1857.—*Improvement in Sugar Works.*—I claim, first, the employment of a vacuum pan or pans, in combination with an evaporating pan or pans or boiler, in which the saccharine juice or other fluid is evaporated under a pressure lower, equal to, or greater than the atmosphere; which last mentioned pan or pans or boiler prepares the saccharine juice, &c., from the vacuum pan or pans, and at the same time supplies the necessary vapor from the saccharine juice, &c., to complete the evaporation or concentration of the syrup, &c., in the vacuum pan or pans, as fully described above.

Second. The employment of a weighted throttle, or other regulating valve, in the main steam pipe, arranged and operating in the manner and for the purpose as herein before described.

Letters Patent, No. 3,275, dated September 23, 1843.—*Improvement in the Machine for Knitting Stockings, &c.*—I claim the mechanism for "narrowing and widening," the same consisting of the movable stops a^2 a^2, combined with a rack of teeth, or other suitable contrivance, formed upon the shifting bar, and acting upon the carriage O of the yarn guide, as set forth; or, of a pattern cylinder v^3, combined with the shifting bar and the carriage O, and operating therewith substantially as described.

Also, the stop rack k^1, combined with the tube S of the yarn guide, and actuated in the manner and for the purpose as set forth.

Also, the mechanism which effects the changes of the clutches, the same consisting of the shifting bar, the arbor u^2, having a circular depression and radial recesses in its heads and levers, and other parts connected to the same, and connecting the same with the clutches, the whole being arranged and operating substantially as herein before specified.

Also, the stationary roller y^1, and the projections t^3 u^3, and their intervening curve, (formed upon the shifting bar,) in combination with the spring S^3 of the sliding toggle bars, and also in combination with the rail t^1 and its depressions, the whole being for the object as described.

Also, the cloth bar c^1, arranged and operating in the manner and for the purpose as set forth.

Also, the particular method by which the depressing bar c is carried and forced down upon the pointed ends of the needles, in order to press them into the grooves in their shanks, viz: by a combination of bent levers f^2, g^2, h^2, and arms i^2, the same being actuated substantially as described.

Also, the manner of raising the stitch hooks, viz: by an elevating plate y, through which they extend, and which is combined with and operates them, as set forth.

Also, the method of clearing the point or lower end of the yarn guide from the depressing bar when the latter descends upon the needles, viz: by a ledge b on the latter, in combination with a roller a applied to the T-piece of the yarn guide, the whole being as specified.

Also, the method of clearing the point of the yarn guide from the stitch hooks when the roll r passes by the thread guide, or as soon as the lateral motion of the thread guide is stopped, viz: by the bevelled edge plate k^4 (applied to the cross piece n) in combination with the screw or other contrivance of similar character projecting from the T-piece of the yarn guide.

Also, the mode of adjusting or regulating the distance to which the points of the needles shall retreat, viz: by the movable curved pieces o^2 p^2 making part of the cam m^2, the same being arranged and operating substantially as explained.

Also, the combination with the mechanism (the arm q and shaft o, supported by pivots p p) which sustains and carries the roller r of the depressing and elevating bar v raised and depressed by machinery, substantially as described.

HENRY BURT.

Letters Patent No. 3,292, dated October 6, 1843.—Re-issue No. 142, dated September 4, 1849.—*Improvement in the Machine for Breaking and Screening Coal.*—I claim the arrangement of the teeth on the two rollers, substantially as herein described, so that, in their rotation, the teeth of one shall come opposite the spaces between the teeth of the other, with sufficient space between to hold lumps of the required size, the rollers being so combined by gearing as to make them rotate in opposite directions and with the required velocities to retain the relative position of the teeth of the two rollers, as described.

JOSEPH BATTIN.

Letters Patent No. 3,354, dated November 24, 1843.—Re-issue No. 196, dated March 25, 1851.—*Improvement in Washing Machine for Cleaning Rags.*—I claim an adjustable rotating water-elevator and strainer, arranged, substantially as herein set forth, in such manner that it can be raised or lowered in the vat of the washing or beating engine, to vary the quantity of water discharged therefrom, or can be raised entirely from the vat, to stop the discharge of water, or for other purposes, as herein set forth.

I also claim a rotating prismatic screen or strainer, for straining the water from the paper stock in the vat of a washing or beating engine, in combination with devices for discharging the strained water, the prismatic screen being not only more efficient than a cylindrical screen, but also admitting of more ready repair.

JAMES PHELPS.

Letters Patent No. 3,375, dated September 15, 1843.—Re-issue No. 496, dated September 15, 1857.—*Improvement in Coating Water Pipes.*—I claim lining metallic pipes with hydraulic cement by means of a cone, or its equivalent, guided through the pipe, so as to lay on the cement of equal thickness, and with great certainty and economy, substantially as described.

JONATHAN BALL.

Letters Patent No. 3,380, dated December 15, 1843.—Re-issue No. 399, dated October 7, 1856.—*Improvement in the Buff for Polishing Spoons and other articles.*—I claim a cylindrical buff, composed of soft leather disks or rings, when the outer portions of said disks are left perfectly free from each other, so as to admit of the yielding necessary to their proper action, substantially as herein described.

LUTHER BOARDMAN.

Letters Patent No. 3,394, dated December 30, 1843.—*Improvement in Hay Presses.*—I claim filling the box with the substance to be pressed into bale by means of a driver raised by machinery, and made to descend upon the substance in the box successfully by gravity as the follower descends, whether effected in the manner above described or in any other mode analogous thereto.

SAMUEL HEWITT.

CLAIMS OF PATENTS FOR DESIGNS GRANTED DURING THE YEAR 1857.

No. 860.—*Design for Upright Stoves*—I claim the design of the base or pedestal, the rings, door, and cap plate connected, as shown and described.

ABNER J. BLANCHARD.

No. 861.—*Design for Ever-pointed Pencil Cases.*—I claim making the case A in the form of a cannon, provided with the beads as shown and described, the whole forming a new and original design for a pencil case.

JOHN H. KNAPP.

No. 862.—*Design for Clock-Case Fronts.*—I claim the configuration of the wreath and projecting scrolls, as described, the whole forming a new and ornamental design for a clock-case front.

CHARLES CHINNOCK.

No. 863.—*Design for Printing-Types.*—I claim the design of the said type, as described and shown.

GEORGE BRUCE.

No. 864.—*Design for Parlor Stove.*—I claim the combination and arrangement of ornamental figures and forms represented in the accompanying drawings forming the plates, being part of the above described stove.

SAMUEL F. PRATT.

No. 865.—*Design for Cooking Stove.*—I claim ornamenting the panels and feet of cooking stoves having elevated ovens, in the manner herein specified and shown in the annexed drawings.

N. S. VEDDER.

No. 866.—*Design for Cook Stoves.*—I claim the ornamental design and configuration of cook stove plates, such as herein described and shown in the annexed drawing.

N. S. VEDDER.

No. 867.—*Design for Parlor Cook Stoves.*—I claim the ornamental design and configuration of parlor cook stove plates, such as herein described and shown in the annexed drawing.

N. S. VEDDER.

No. 868.—*Design for Railroad Car Stoves.*—I claim the ornamental design and configuration of the top plate, of the bottom plate, and of the door herein described and represented in the annexed drawings.

JAMES L. HOWARD.

No. 869.—*Design for Cooking Ranges.*—I claim the ornamental design of the front plate doors and edge of the top plate, as described and represented in the drawing.

CHARLES J. SHEPARD.

No. 870.—*Design for Cooking Stoves.*—I claim the combination and arrangement of the ornamental design herein described and shown.

JAMES E. STEVENSON.

No. 871.—*Design for Parlor Cooking Stoves.*—I claim the design, configuration, and arrangement in bas relief on the front and top of the stove, as described, forming a new and original design for stove, called a parlor cooking stove.

DANIEL WILSON.

No. 872.—*Design for Wood Stoves.*—I claim the new design for a stove, consisting of the ornamental configurations herein above described and represented in the drawings.

A. C. BARSTOW.

No. 873.—*Design for Cooking Stoves.*—I claim the design and configuration of the several parts of the stove, in combination with the projecting pilasters, mouldings, and ornaments in relief, substantially as specified and represented in the drawings.

ALLEN COMSTOCK.

No. 874.—*Design for Stove Doors.*—I claim the central ornament within the annular bead *e*, the angular corrugations *f* on the face or panel of the door, and the beads *d* around the edges of the panel, and the bevelled or inclined edges of the door, having the ovolo beads *b* upon them, and the obtuse quirks *c c*, when the above parts are arranged and combined, as herein shown and described, to form a new and ornamental design for a door or panel of a cooking stove.

M. C. BURLEIGH.

No. 875.—*Design for Floor Oil-Cloths.*—I claim the arrangement of ornamental figures forming a design for floor cloths, as shown in the aforesaid drawing.

JAMES HUTCHISON.

No. 876.—*Design for Soda Water Apparatus.*—I claim the design and configuration of the parts A B H H of the self-cooling draught apparatus, as herein shown and described.

JOSEPH BERNHARD.

No. 877.—*Design for Radiator Stoves.*—I claim the ornamental design and configuration of the end plate with its fire door, hearth, and feet, of the illuminated side door with its frame, and of the pot-hole frame with its cover; all as herein described and represented in the annexed drawing.

N. S. VEDDER.

No. 878.—*Design for Cooking Stoves.*—I claim the general design and configuration of said stove.

N. S. VEDDER.

No. 879.—*Design for Legs and Posts of Bedsteads.*—I claim the posts B with scroll bars *l* and vines *c*, the panels *j* with ornaments *k*, and the legs A having the leaf scrolls *a a*, leaf edging *f f*, and the tulip and fluted ornaments *g h*, the whole being arranged as described, to form a new and ornamental design for the legs and posts of a cast metal bedstead.

WILLIAM MAURER.

No. 880.—*Design for Iron Railings.*—I claim the form of all the parts of the railing, as above described—that is, the design as above set forth, reference being had to the accompanying drawing, which is an accurate representation of the same, at a scale of three-quarters of an inch to the foot.

ROBERT WOOD.

No. 881.—*Design for the Plates of Stoves.*—I claim the new design for stove plates, consisting of the mouldings and ornamental raised figures, as herein above described and represented in the drawings.

A. C. BARSTOW.

No. 882.—*Design for Clock Cases.*—I claim the design for a clock case, as herein described, with a wood circular sash C to the dial, in combination with the square top case; also, the carved enrichment E on the glass of the tablet, substantially in the manner as herein set forth and described.

ELIAS INGRAHAM.

No. 883.—*Design for Clock-Case Fronts.*—I claim the base A, pilasters C C on the jamb posts B B, cap plate D, panel H, pilasters I I, and door G, when the whole are arranged specifically, as herein shown and described, to form a new and original design for a clock-case front.

CHAUNCEY JEROME.

No. 884.—*Design for Plates of a Cooking Stove.*—I claim the ornamental design for the lower front plate, foot, and doors of a cooking stove, herein described and fully represented in the annnexed drawings.

N. S. VEDDER.

No. 885.—*Design for Stoves.*—We claim the design, configuration, nd arrangement of the ornaments upon the several plates and castings,

as herein described and set forth in the accompanying drawings, constituting the design of cook stove, "Union Complete."

JACOB STEFFE.
JAMES HORTON.
JOHN CURRIE.

No. 886.—*Design for Cooking Stoves.*—We claim the design for cooking stove, as herein above illustrated and set forth.

JACOB BEESLEY.
E. J. DELANY.

No. 887.—*Design for Stoves.*—We claim the design involved in the ornamenting of a stove by the external configuration thereof, substantially as herein set forth.

RUSSEL WHEELER.
STEPHEN A. BAILEY.

No. 888.—*Design for Churns, Egg-beaters, &c.*—I claim the general configuration of the vessel, as shown in figure 1, with the ornamental standard or bearings *h i j*, substantially as shown, described, and for the purposes set forth.

JOHN S. GALLAHER, Jr.

No. 889.—*Design for Picture Frames.*—I claim the combination and arrangement of the ornamental forms, as specified and represented in the accompanying drawings, as a design for a picture frame.

A. P. C. BONTE.

No. 890.—*Design for Furnaces.*—I claim the shape and configuration of the several parts of the said furnace, as herein above described and shown in the drawings.

WILLIS S. BRONSON.

No. 891.—*Design for Stoves.*—We claim the design, configuration, and arrangement of the several ornaments in bas relief upon the plates of the stove, as herein described and shown in the accompanying drawings, constituting the design of stove "Noble Cook."

GARRETTSON SMITH.
HENRY BROWN.
S. H. SAILOR.

No. 892.—*Design for Cooking Stoves.*—We claim the general design and configuration.

THOMAS H. WOOD.
HENRY S. HUBBELL.
JOHN E. ROBERTS.

No. 893.—*Design for Cooks Stoves.*—I claim the bead work on the sides, and the ornaments on the two doors and back, as herein described, when combined to produce an ornamental design for a cooking stove.

JOHN D. MARSHBANK.

No. 894.—*Design for Busts of Napoleon Bonaparte.*—I claim the new design for a bust of Napoleon Bonaparte, as herein above described and represented in the drawing.

THOMAS BALL.

No. 895.—*Design for Stoves.*—I claim the combination of ornaments, as herein described, the whole forming an original design for an elevated oven cook stove.

S. W. GIBBS.

No. 896.—*Design for Coal Cooking Stoves.*—We claim the configuration and arrangement of the several ornaments, as set forth in the annexed drawings, forming a new and original design for coal cooking stoves, to be known and called the "Tropic."

CONRAD HARRIS.
PAUL W. ZOINER.

No. 897.—*Design for Wood Parlor Stoves.*—We claim the combination and arrangement of the several ornaments, as set forth in the annexed drawings, forming a new and original design for wood parlor stoves, to be known and called the "Magic."

CONRAD HARRIS.
PAUL W. ZOINER.

No. 898.—*Design for Dining Room Stoves.*—We claim the combinations and arrangements of the figures, scrolls, and foliage, as set forth in the annexed drawings, forming a new and original design for dining room or oven parlor stoves, to be known and called the "Black Swan."

CONRAD HARRIS.
PAUL W. ZOINER.

No. 899.—*Design for Cooking Stoves.*—I claim the design and configuration of the mouldings and ornaments, as herein described, forming an ornamental design for stoves.

S. W. GIBBS.

No. 900.—*Design for Stoves.*—I claim the design and configuration of the mouldings and ornaments, as herein described, forming an ornamental design for stoves.

N. S. VEDDER.

No. 901.—*Design for Stoves.*—We claim the design of parlor cooking stove, as herein above illustrated and set forth.

JACOB BEESLEY.
E. J. DELANY.

No. 902.—*Design for Stove Ornaments.*—I claim the arrangement and combination of the various figures and mouldings, the whole forming an ornamental design for stoves, as herein described.

SAMUEL D. VOSE.

No. 903.—*Design for Stove Ornaments.*—I claim the arrangement and combination of the various figures and mouldings, the whole forming an ornamental design for stoves, as herein described.

SAMUEL D. VOSE.

No. 904.—*Design for Stove Ornaments.*—I claim the arrangement and combination of the various figures and mouldings, the whole forming an ornamental design for stoves, as herein described.

SAMUEL D. VOSE.

No. 905.—*Design for Stoves.*—I claim the ornamental design herein specified and fully shown in the annexed photographic drawing, for the upper and the lower front plates with their respective doors, and the top plate of the lower section of a parlor stove.

JOHN C. SMITH.

No. 906.—*Design for Stoves.*—I claim the combination and arrangement of ornamental figures and forms, represented in the accompanying drawings, forming together the ornamental design for the plates of a cooking stove.

S. W. GIBBS.

No. 907.—*Design for Stoves.*—I claim the combination and arrangement of ornamental figures and forms, represented in the accompanying drawings, forming together the ornamental design for the plates of a cooking stove.

SAMUEL W. GIBBS.

No. 908.—*Design for Stoves.*—I claim the combination and arrangement of ornamental figures and forms, represented in the accompanying drawings, forming together the ornamental design for the plates of a cooking stove.

SAMUEL W. GIBBS.

No. 909.—*Design for Grate or Stove Fronts.*—I claim the design, configuration, and arrangement of the several ornaments in bas relief, as herein described and set forth in the annexed drawing.

JOHN E. BENDIX.

No. 910.—*Design for Cooking Stoves.*—We claim the design for star cooking stove, as herein above illustrated and set forth.

J. MAGUIRE.
JOSEPH A. READ.
DN. WRIGHT.

No. 911.—*Design for Stoves.*—I claim the design and configuration of the mouldings and ornaments, as herein described, forming an ornamental design for stoves.

N. S. VEDDER.

No. 912.—*Design for Stoves.*—I claim the combination and arrangement of ornamental figures and forms represented in the accom-

panying drawings, forming together the ornamental design for the plates of a cooking stove.

S. W. GIBBS.

No. 913.—*Design for Stoves.*—I claim the combination and arrangement of ornamental figures and forms represented in the accompanying drawings, forming together the ornamental design for the plates of a cooking stove.

S. W. GIBBS.

No. 914.—*Design for Parlor Stoves.*—I claim the ornamental design and configuration of stove, such as herein described and shown in the annexed drawings. E. J. CRIDGE.

No. 915.—*Design for Cooking Stoves.*—I claim the ornamental design and configuration of the several plates of castings of a cooking stove, herein described, and fully represented in the annexed drawings.

JAMES R. HYDE.

No. 916.—*Design for Clock Cases.*—I claim the figure dressed in the military costume, as herein shown and described, and forming a new and original design for a clock case.

PIETRO CINQUINNI.

No. 917.—*Design for Iron Railings.*—I claim the design of the ornamental iron railing, composed of the arch-shaped bars *b* and ornaments *c d* and *f*, and bars *a* and *e*, as described and represented in the drawing. HENRY JENKINS.

No. 918.—*Design for Medallions of Franklin to Mark Pens and Pen-Holders.*—I claim the device above described, viz: A head or profile likeness of Franklin within a medallion, for stamping or marking steel pens or pen-holders.

WILLIAM BALL.

No. 919.—*Design for Statues of General Warren.*—I claim the design as represented.

HENRY DEXTER.

No. 920.—*Design for Stoves.*—We claim the ornamental design of the lower section of the stove, consisting of the parts A B and C, as herein described and shown in the annexed drawing.

And we also claim the external form or configuration of the upper section of the stove, consisting of the parts D and E, shaped as herein specified and shown in the drawing.

JAMES J. DULLEY.
RUSSELL MANN.

No. 921.—*Design for Stoves.*—I claim the combination and arrangement of figures and forms as represented, forming the ornamental *design* of a *toy parlor stove.*

S. W. GIBBS.

No. 922.—*Design for Cooking Stoves.*—I claim the design as represented.

ELIAS YOUNG.

No. 923.—*Design for Stoves.*—I claim the combination and arrangement of ornamental figures and forms represented in the accompanying drawings, forming together the ornamental design for the plates of a parlor stove.

THOMAS BARRY.

No. 924.—*Design for Stoves.*—I claim the combination and arrangement of ornamental figures and forms represented in the accompanying drawings, forming together the ornamental design for the plates of a stove.

THOMAS BARRY.

No. 925.—*Design for Stoves.*—I claim the combination and arrangement of ornamental figures and forms represented in the accompanying drawings, forming together the ornamental design for the plates of a stove.

THOMAS BARRY.

No. 926.—*Design for Stoves.*—I claim the combination and arrangement of ornamental figures and forms represented in the accompanying drawings, forming together the ornamental design for the plates of a stove.

THOMAS BARRY.

No. 927.—*Design for Stoves.*—I claim the combination and arrangement of ornamental figures and forms represented in the accompanying drawings, forming together the ornamental design for the plates of a stove.

THOMAS BARRY.

No. 928.—*Design for Stoves.*—I claim the combination and arrangement of ornamental figures and forms represented in the accompanying drawings, forming together the ornamental design for the plates of a stove.

THOMAS BARRY.

No. 929.—*Design for Stoves.*—I claim the combination and arrangement of ornamental figures and forms represented in the acccompanying delineations, forming together the ornamental design for the plates of a stove.

S. H. RANSOM.

No. 930.—*Design for Stoves.*—I claim the combination and arrangement of ornamental figures and forms represented in the accompanying delineations, forming together the ornamental design for the plates of a stove.

S. H. RANSOM.

No. 931.—*Design for Stoves.*—I claim the combination and arrangement of ornamental figures and forms represented in the accompanying delineations, forming together the ornamental design for the plates of a parlor stove.

S. H. RANSOM.

No. 932.—*Design for Stoves.*—I claim the combination and arrangement of ornamental figures and forms represented in the accompanying delineations, forming together the ornamental design for the plates of a stove.

S. H. RANSOM.

No. 933.—*Design for Stoves.*—I claim the combination and arrangement of ornamental figures and forms represented in the accompanying delineations, forming together the ornamental design for the plates of a stove.

S. H. RANSOM.

No. 934.—*Design for Stoves.*—I claim the combination and arrangement of ornamental figures and forms represented in the accompanying delineations, forming together the ornamental design for the plates of a stove.

S. H. RANSOM.

No. 935.—*Design for Clock-Case Front.*—I claim the scrolls, vines, and basket, combined and arranged as shown, to form an ornamental design for a clock-case front.

PIETRO CINQUINNI.

No. 936.—*Ornamental Design for Brick.*—We claim the combination of the ornamental design and configuration for a building brick, as represented in the accompanying drawings.

G. W. SHOLL.
CHARLES STEWART.

No. 937.—*Design for Stoves.*—I claim the design or combination of elephant, base, and stove extension, as shown in the drawing.

THOMAS D. WORRALL.

No. 938.—*Design for Stoves.*—I claim the design and configuration of the mouldings and ornaments as herein described, forming an ornamental design for stoves.

N. S. VEDDER.

No. 939.—*Design for Stoves.*—I claim the combination and arrangement of ornamental figures and forms represented in the accompanying drawings, forming together the ornamental design for the plates of a stove.

THOMAS BARRY.

No. 940.—*Design for Type.*—I claim the design of the said type, as described and shown.

GEORGE BRUCE.

No. 941.—*Design for Sad-Iron Stove.*—I claim the configuration of ornaments and mouldings as herein described, forming an ornamental design for a sad-iron stove.

S. W. GIBBS.

No. 942.—*Design for Stoves.*—We claim the ornamental design of the several castings before stated, as herein described and delineated in the accompanying drawing, forming a design for a stove.

GARRETTSON SMITH.
HENRY BROWN.
S. H. SAILOR.

No. 943.—*Design for Gas-Burner Shades.*—I claim the new design for shades for gas-burners, &c., which consists of the circular rims or borders ornamented, as herein described and represented in the drawings.

GEORGE B. FOSTER.

No. 944.—*Design for Stands to Hold Shovels and Tongs.*—I claim the new design for a shovel and tongs stand, consisting in the ornamental figures of the base or dish, the upright, the arms or hook, and the handle, as set forth in the accompanying drawing.

JULIUS MEYER.

No. 945.—*Design for Stands to Hold Shovels and Tongs.*—I claim the new design for a shovel and tongs stand, consisting in the ornamental figures set forth in the accompanying drawings.

JULIUS MEYER.

No. 946.—*Design for Clock Cases.*—I claim the figure, its general configuration and arrangement of parts, as shown and described, to form a new and original design for a clock case, termed the Santa Claus.

PIETRO CINQUINNI.

No. 947.—*Design for Coal Scuttles.*—I claim the general configuration of the parts, as herein shown and described, the whole forming a new and original design for a coal scuttle.

GOTTFRIED THULEMEYER.

No. 948.—*Design for Shelf Brackets.*—I claim the open relief paneled border at the side and top of the bracket, and the peculiar configuration of the griffin-head, in connexion with the scroll work, as shown in the drawing.

IRA CHASE, JR.

No. 949.—*Design for Shelf Brackets.*—I claim the peculiar configuration of the griffin-head and scroll work, as shown in the drawing.

IRA CHASE, Jr.

No. 950.—*Design for Clock Fronts.*—I claim the design of the two dolphins, and the design of the figure of the female with the child holding the lyre, combined to form a design for clock-case fronts.

NICHOLAS MULLER.

No. 951.—*Design for Clock Fronts.*—I *claim* the ornamental pedestal, the two figures *d* and *e* resting on its sides, the wreath surrounding the frame of the dial hole, and the top ornament *f*, all as represented in the drawing, the whole forming a design for a clock-case front.

NICHOLAS MULLER.

No. 952.—*Design for Metal Kegs.*—We claim the combination of the curved hoops in relief on a foundation forming a regular bulge with the beading and ornamental configuration of the bottom and top of the keg, in the manner described and shown in the drawing, the whole forming a new ornamental design for a metal keg.

C. L. REHN.
H. EVERETT.

No. 953.—*Design for Six plate Stoves.*—We claim the ornamental design of the stove, as shown in the drawings.

NATHANIEL PUTNAM RICHARDSON.
WILLIAM WALLACE STEPHENS.

No. 954.—*Design for Stoves.*—We claim the configurations and ornaments above described and shown in the drawings as a design for stoves.

NATHANIEL PUTNAM RICHARDSON.
WILLIAM WALLACE STEVENS.

No. 955.—*Design for Stoves.*—We claim the combination of the various ornamented plates, as shown in the drawing, the whole forming a design for a hall or parlor stove.

GARRETTSON SMITH.
HENRY BROWN.
JOSEPH A. READ.

No. 956.—*Design for a Cooking Stove.*—We claim the ornamented plates and doors, as combining to form an ornamental cook stove.

GARRETTSON SMITH.
HENRY BROWN.
JOSEPH A. READ.

No. 957.—*Design for Grave Borders.*—I claim the ornaments and configurations combined as above described and shown, for a grave border.

IRA CHASE, Jr.

No. 958.—*Design for Shelf Brackets.*—I claim the ornamental configuration of the said bracket, above described.

IRA CHASE, Jr.

No. 959.—*Design for Clock Cases.*—I claim the combination and arrangement of various architectural mouldings, so as to produce, by their relative position and their combined artistical effect, the design for clock cases herein before set forth.

SAMUEL B. JEROME.

No. 960.—*Design for Cooking Stoves.*—We claim the combination and arrangement of ornamental figures and forms represented, forming together an ornamental design for a cooking stove.

GARRETTSON SMITH.
HENRY BROWN.

No. 961.—*Design for Parlor Stoves.*—We claim the combination and arrangement of ornamental figures and forms represented, forming together an ornamental design for a parlor stove.

GARRETTSON SMITH.
HENRY BROWN.

No. 962 —*Design for Stoves.*—We claim the combination and arrangement of ornamental figures and forms represented, forming together an ornamental design for parlor stoves.

GARRETTSON SMITH.
HENRY BROWN.

No. 963.—*Design for Stoves.*—I claim the design of the base plate, each of the doors, door frame, the cap plate, constituting a design for stoves, as shown in the drawings.

WM. T. COGGESHALL.

No. 964.—*Design for Barometer Cases.*—I claim the design of barometer case, as herein set forth.

T. R. TIMBY.

No. 965.—*Design for Match Boxes.*—I claim the peculiar external shape or configuration of the box, as herein described and shown by the annexed drawings, and to such shape or configuration I confine my claim.

ELISHA WATERS.

No. 966.—*Design for a Cooks' Stove.*—I claim the ornamental design of cooking stove, substantially as herein exhibited.

ELIAS YOUNG.

No. 967.—*Design for Cooks' Stoves.*—We claim the design, configuration, and arrangement of the several ornaments in bas relief upon

the stove castings, as heretofore described and set forth in the annexed drawing, constituting the ornamental design of cook stove "National."

GARRETTSON SMITH.
HENRY BROWN.

No. 968.—*Design for Laundry Stoves.*—I claim the new design for the front and bottom plates of a laundry stove, consisting of the ornamental configuration, as herein above described and represented in the drawings.

A. C. BARSTOW.

No. 969.—*Design for Stoves.*—I claim the design substantially as represented in the aforesaid drawings.

B. W. DUNKLEE.

No. 970.—*Design for Clock Fronts.*—What I claim is, the design for clock or time piece front sashes, with two circular parts A and B, and the rosettes D and E, in the manner and for the purpose substantially as herein set forth and described.

ELIAS INGRAHAM.

No. 971.—*Design for Trade Marks on Plough Springs, &c.*—What I claim is, the design herein represented to be stamped, painted, moulded, or in any manner affixed on vulcanized India rubber, or its substitute, when used for the purpose of spring clevises for ploughs, or any other similar purpose.

J. D. WILLOUGHBY.

No. 972.—*Design for a Cooking Stove.*—We claim the combination and arrangement of figures and forms represented in the accompanying drawing, forming together the ornamental design for the plates of a cooking stove.

JACOB STEFFE.
JAMES HORTON.
JOHN CURRIE.

ILLUSTRATIONS.

18523

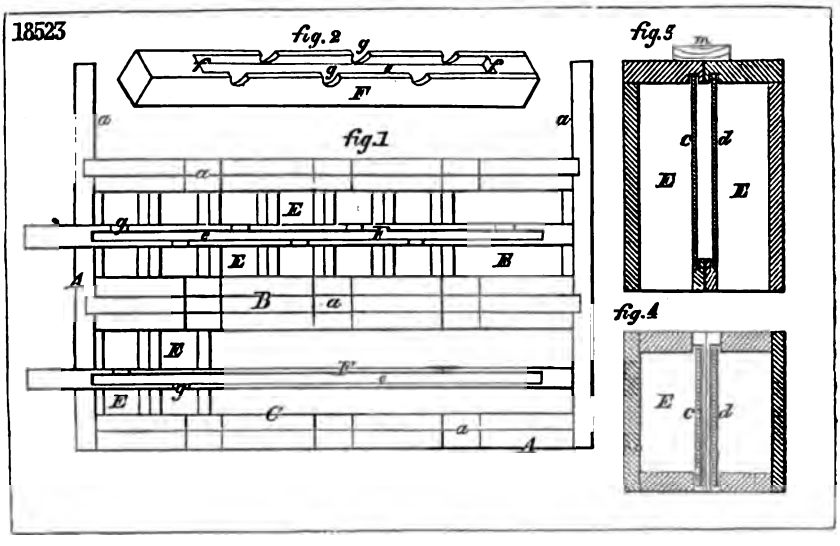

18815

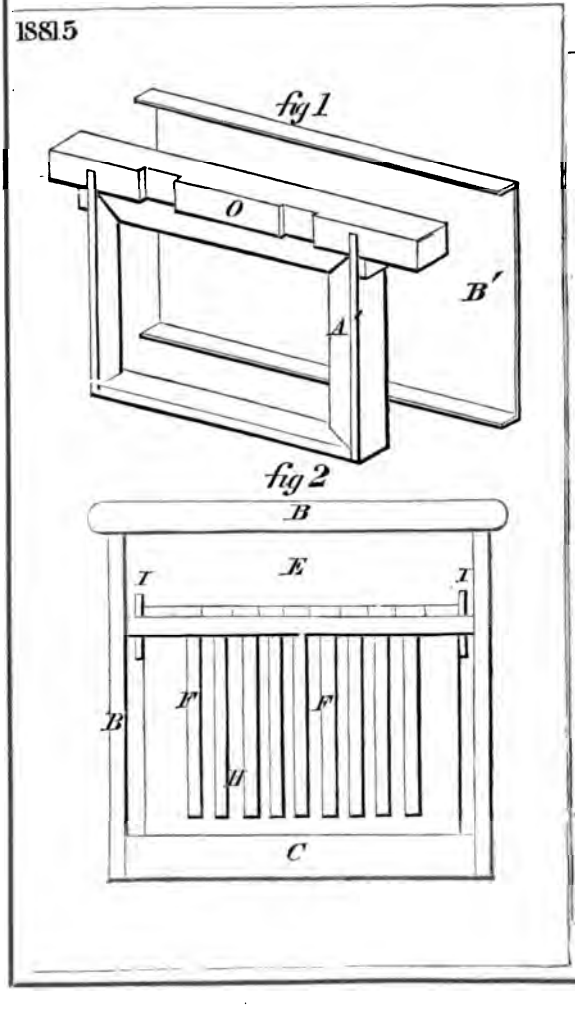

18827

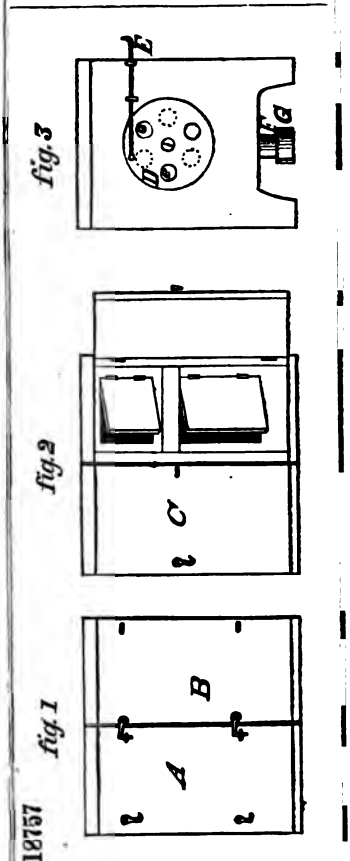

18576

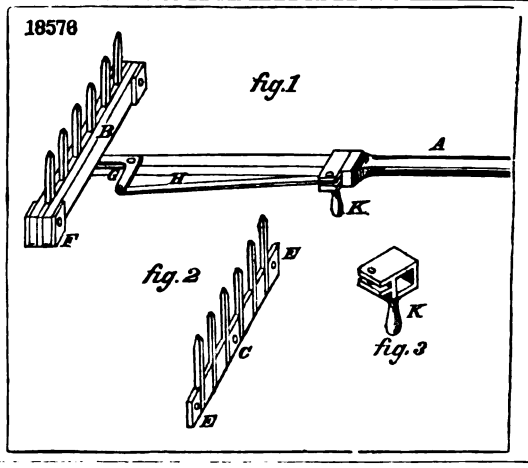

16474

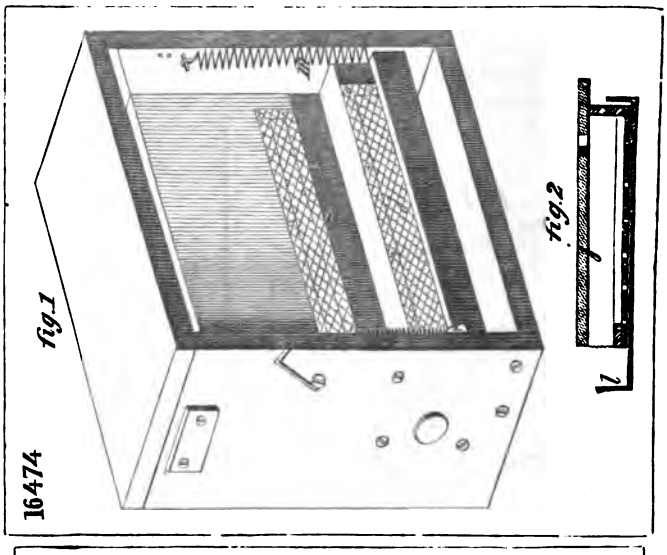

17781

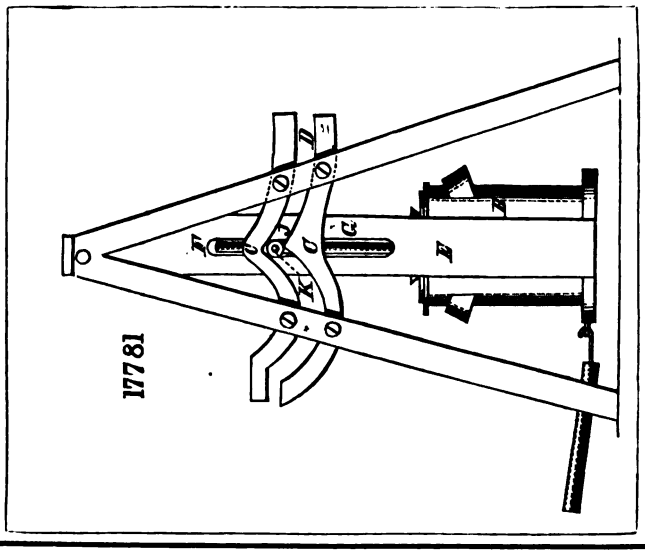

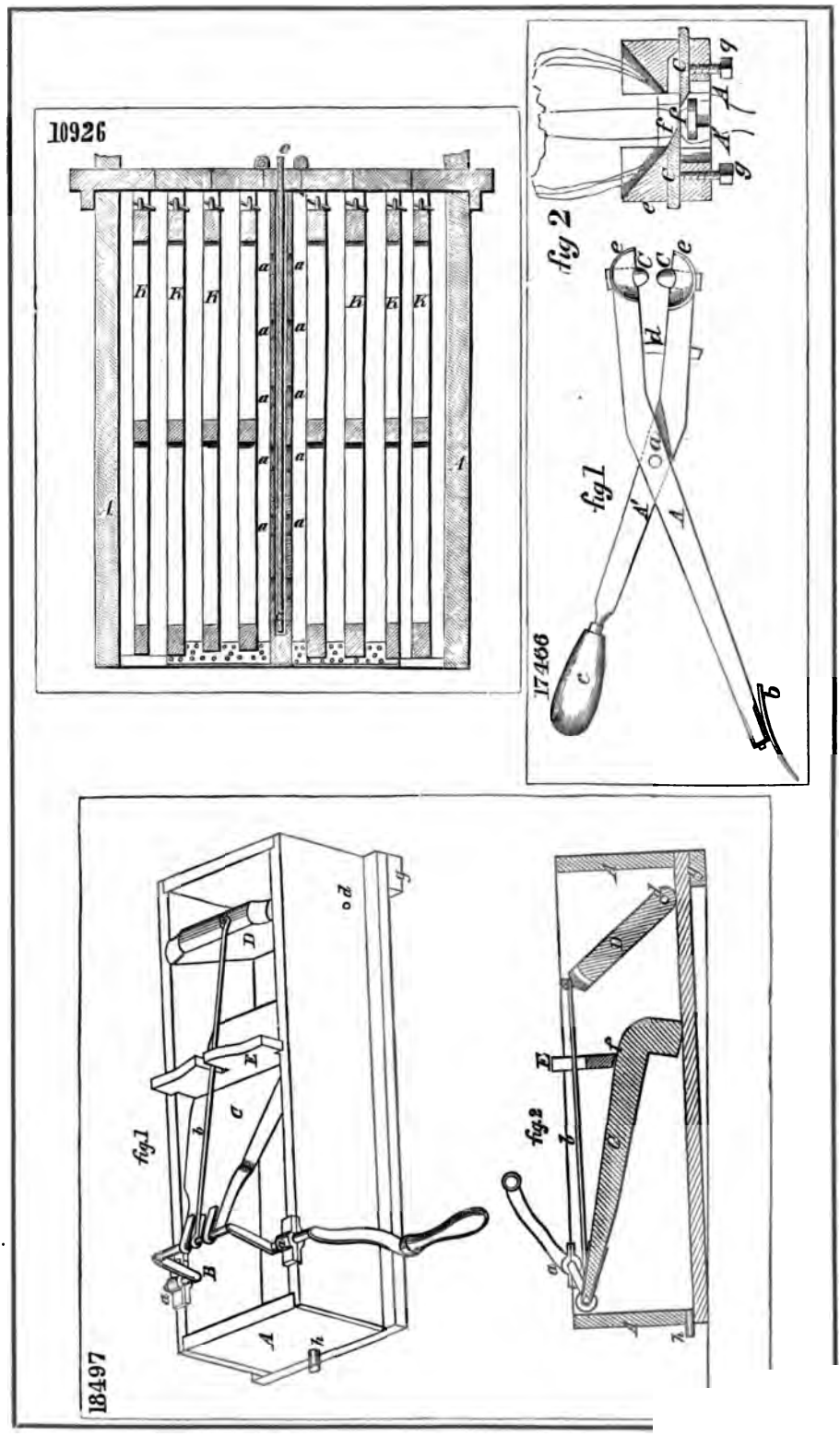
10926
17466
fig 1
fig 2
18497
fig 1
fig 2

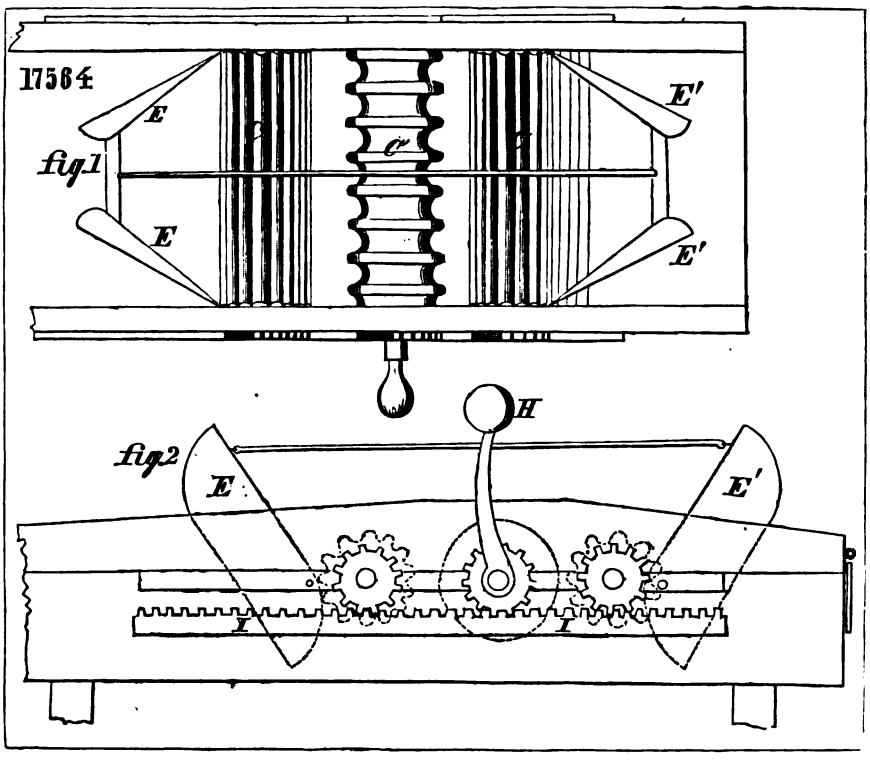
17564
fig.1
E
E'
E
E'
C
C'
C
fig.2
H
E
E'
I
I

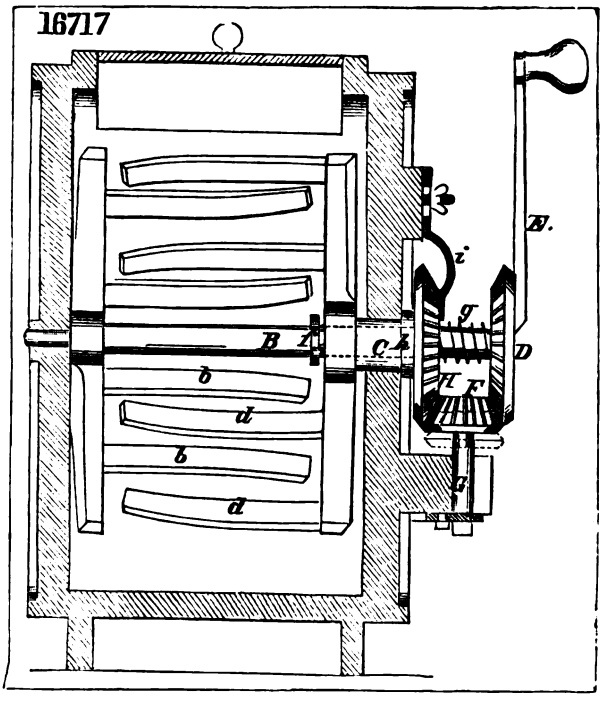
16717
B
C
D
E
F
G
H
I
b
d
b
d

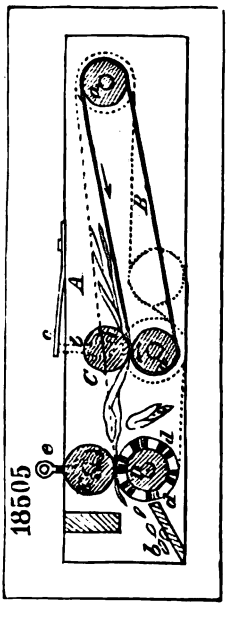
18505
A
B
C
c
e
d

18649

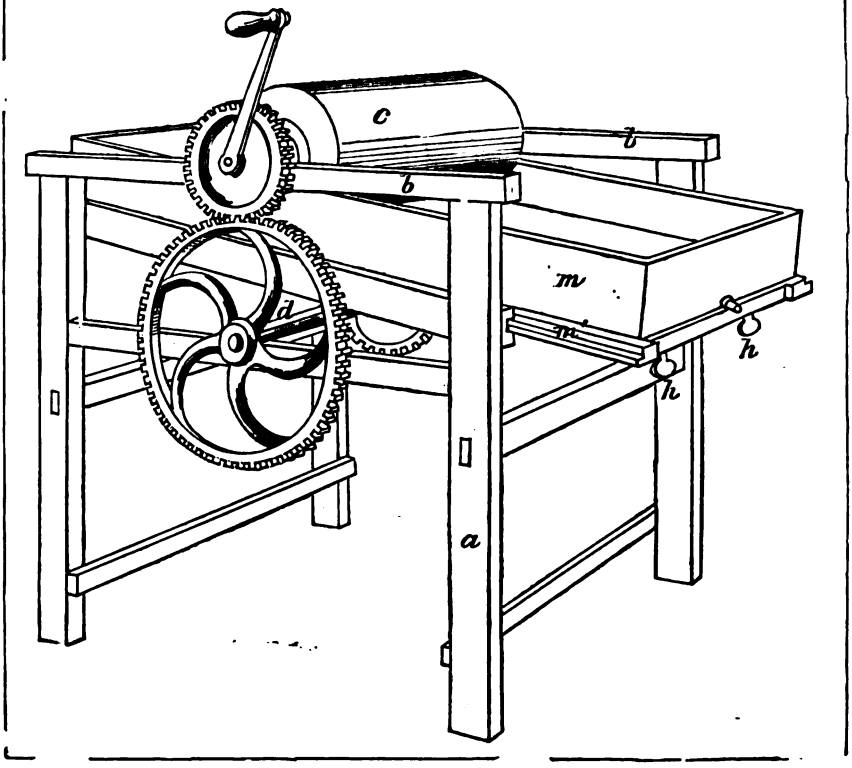

18702

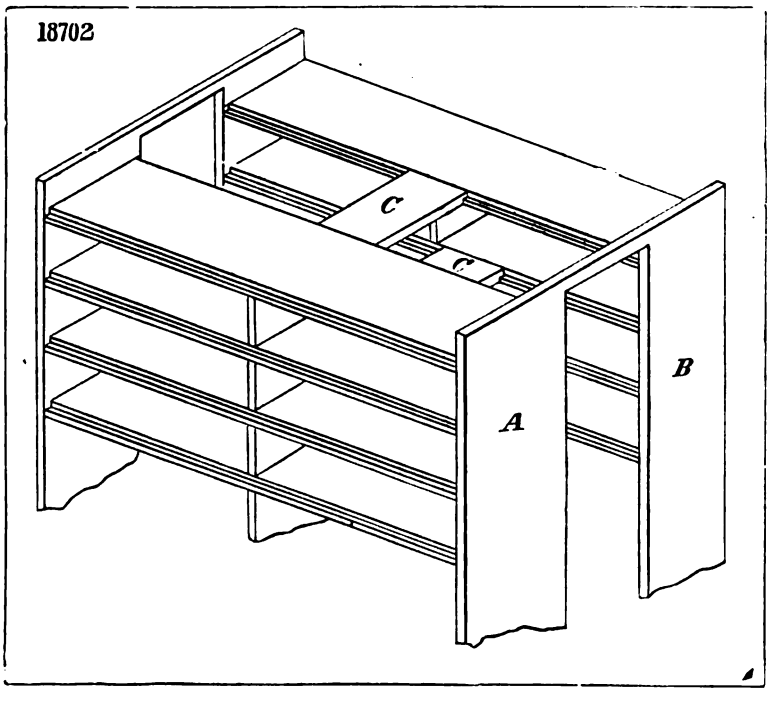

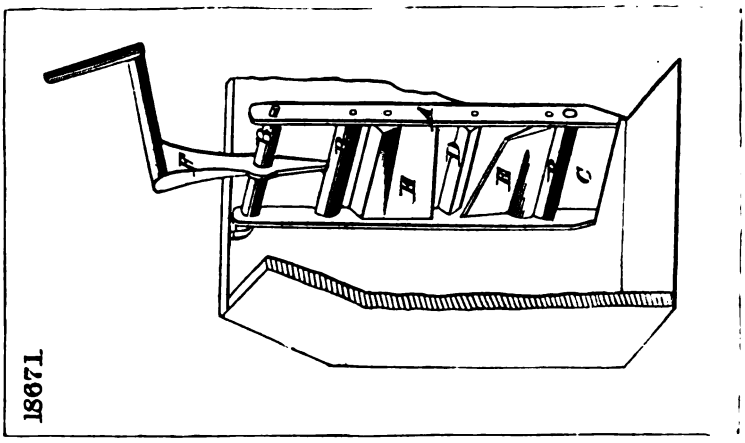
18671
A
B
C
D
E
F
G
H

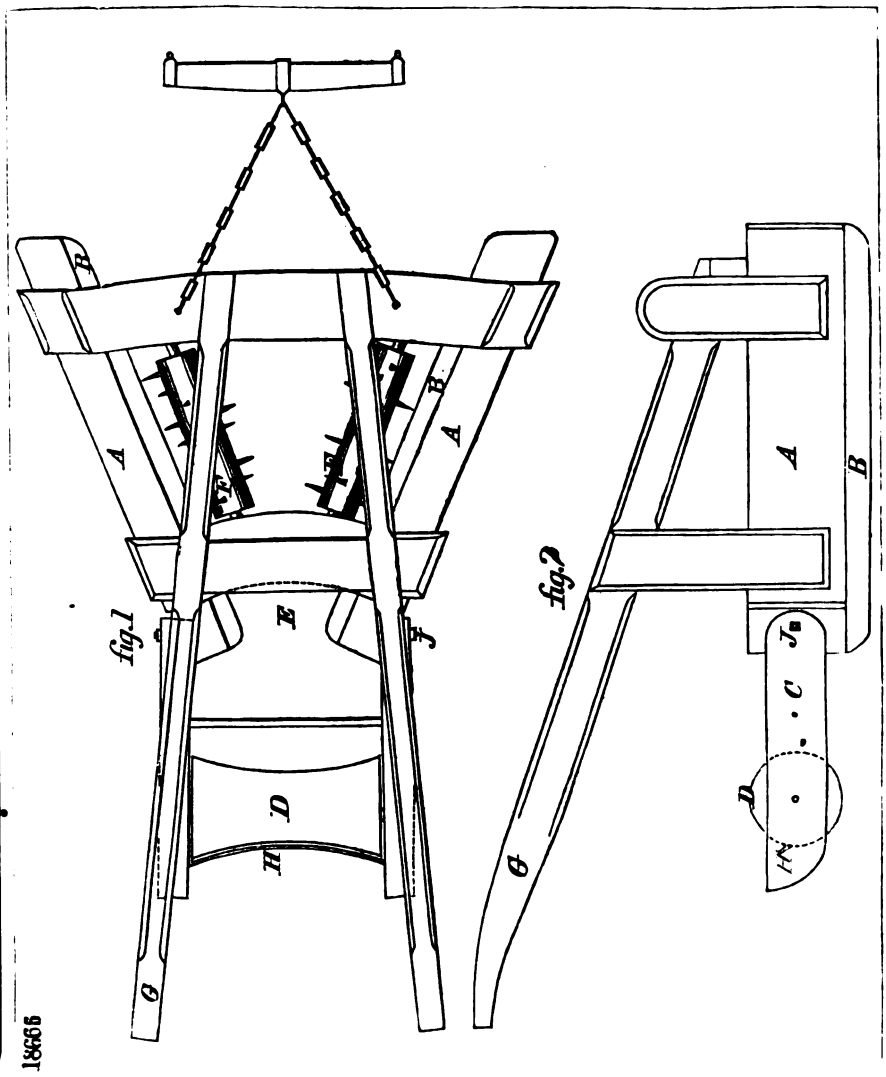
18665
fig.1
A
B
C
D
E
F
G
H
fig.2
A
B
C
D
G
J

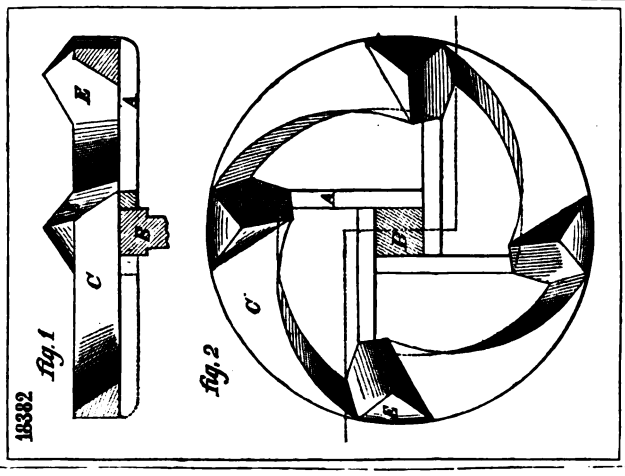
18382
fig. 1
fig. 2

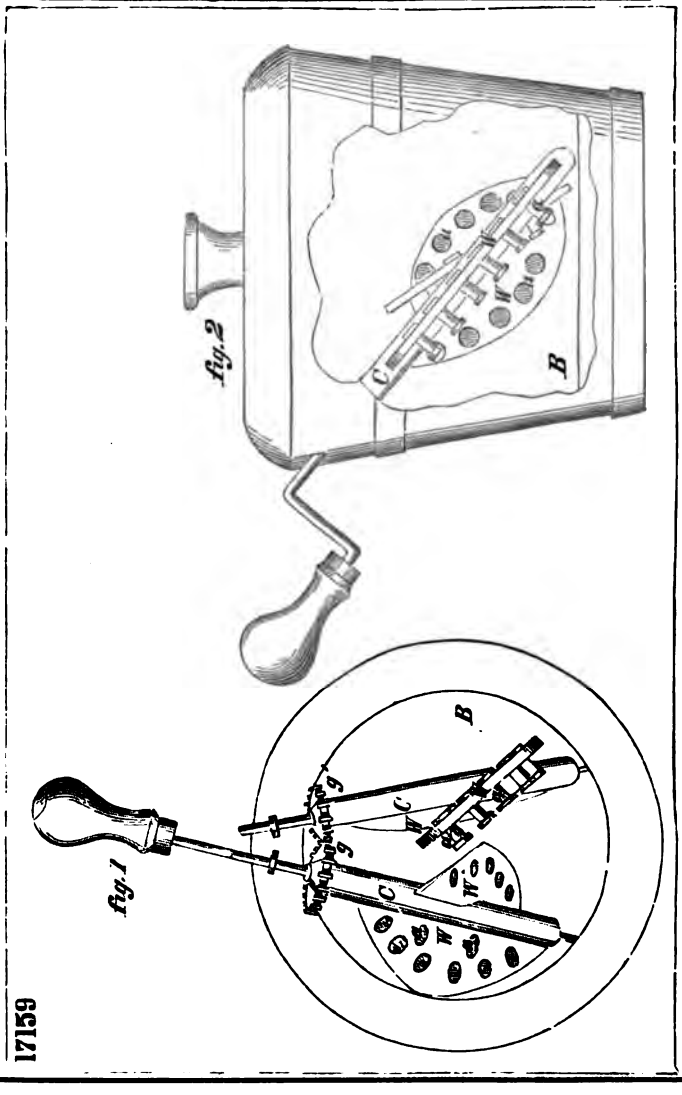
17159
fig. 1
fig. 2

18797

fig. 1

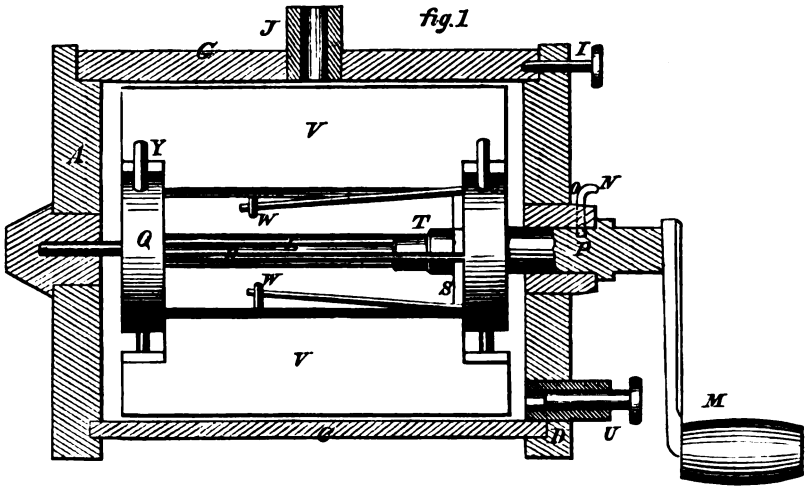

d18797

fig 2

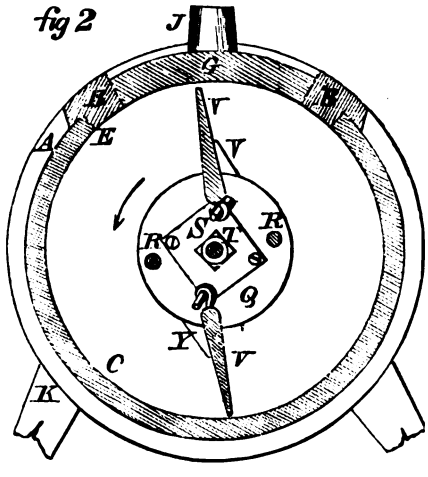

18384

fig. 1

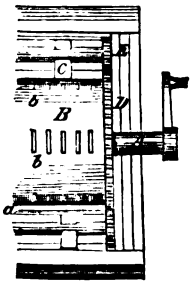

fig. 2

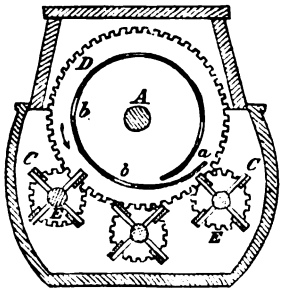

17790

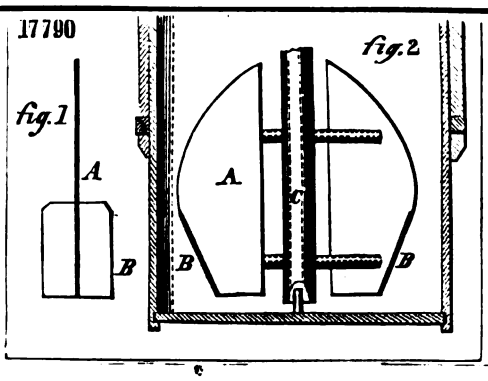

18937

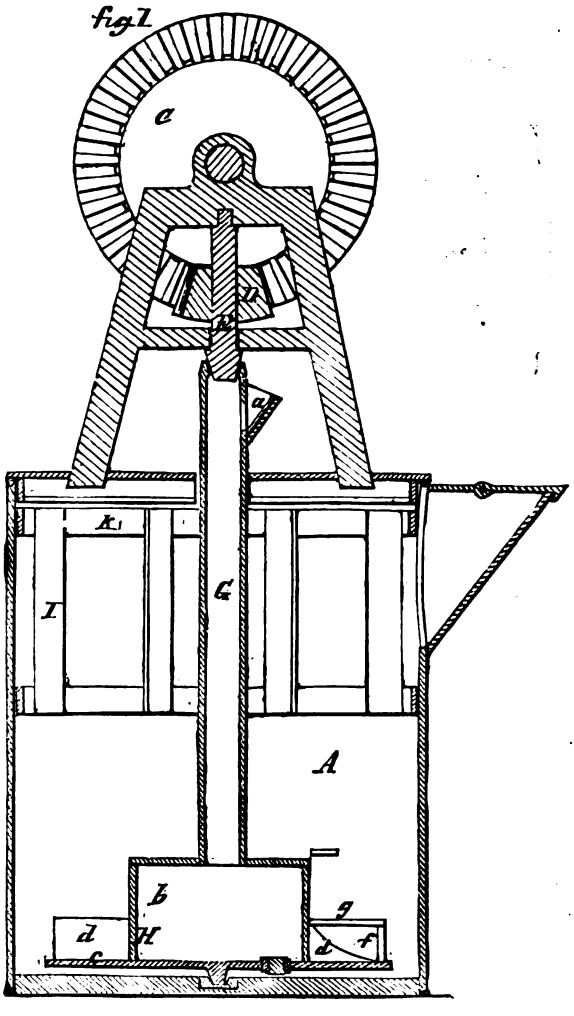

18165

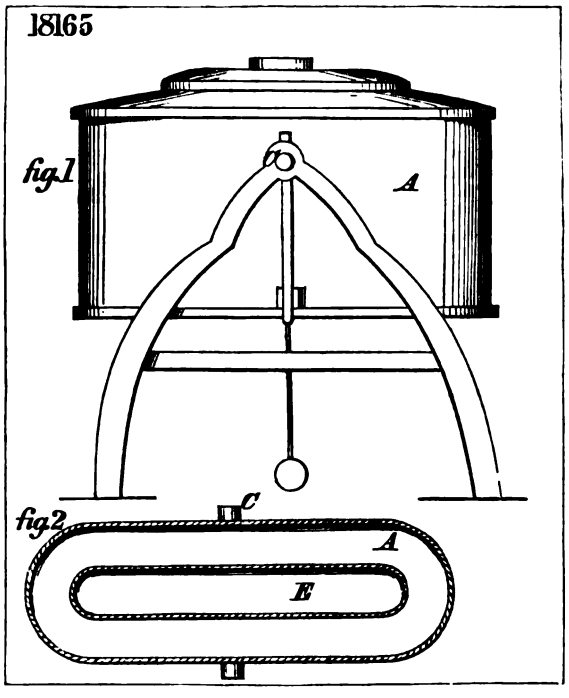

ad18937

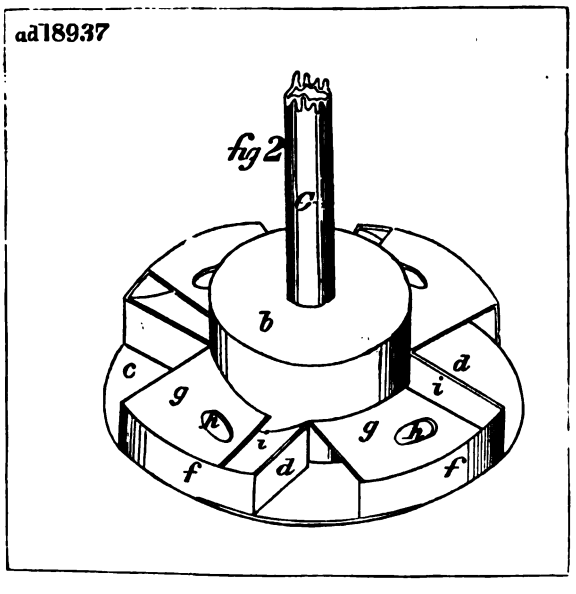

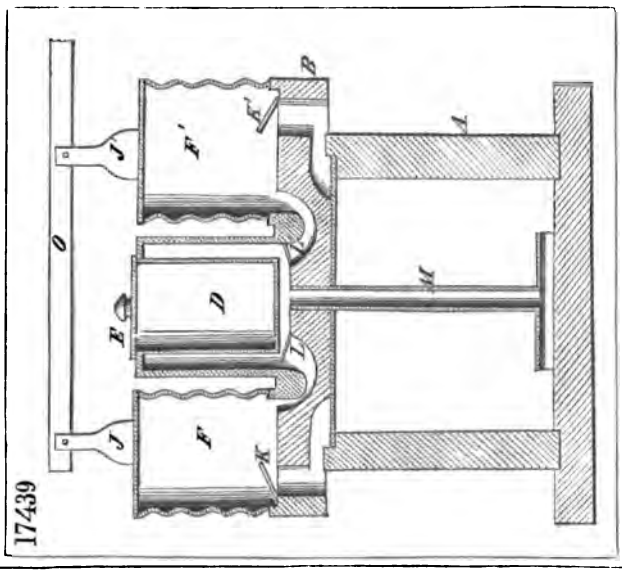
17439
O
J
J
E
D
F
F'
E'
K
L
M
A
B

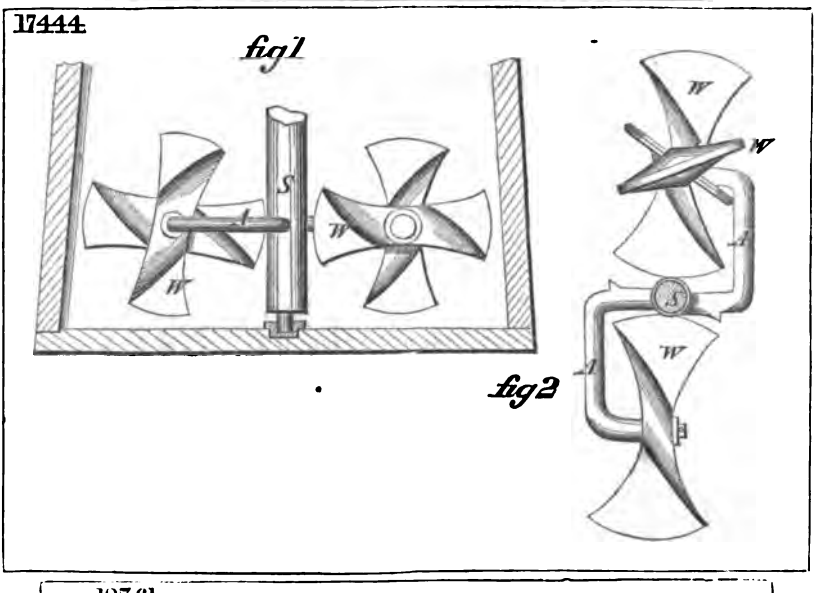
17444
fig1
fig2
S
W
W
W
W
W
S

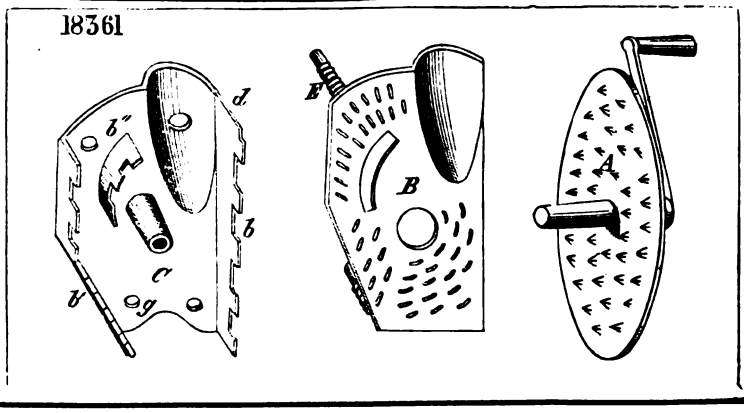
18361
d
b
b'
C
a
g
E
B
A

18936

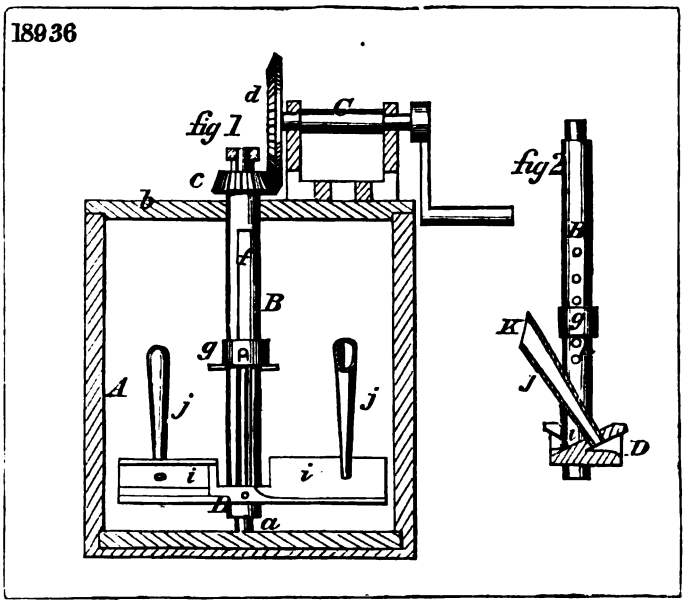

18700

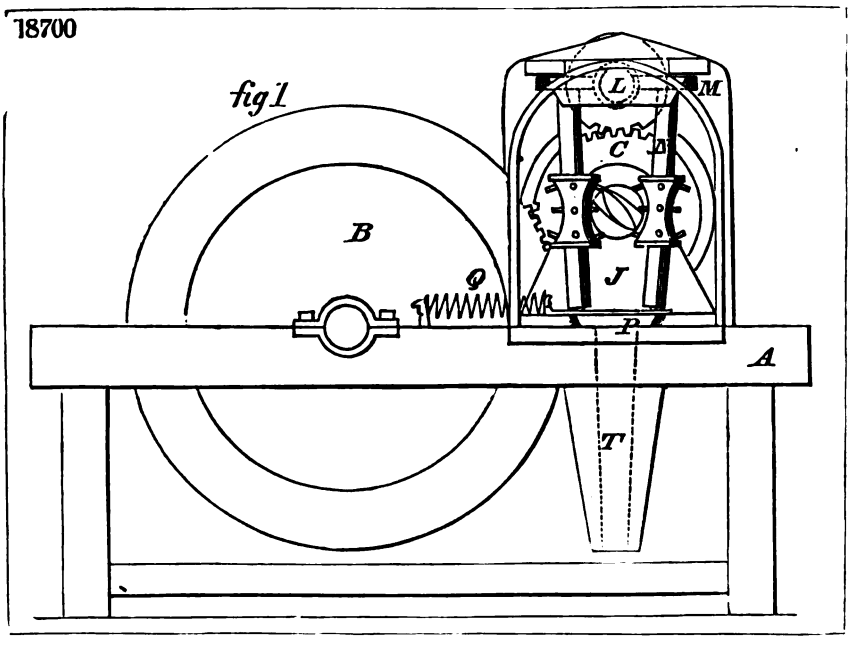

18325

fig.1

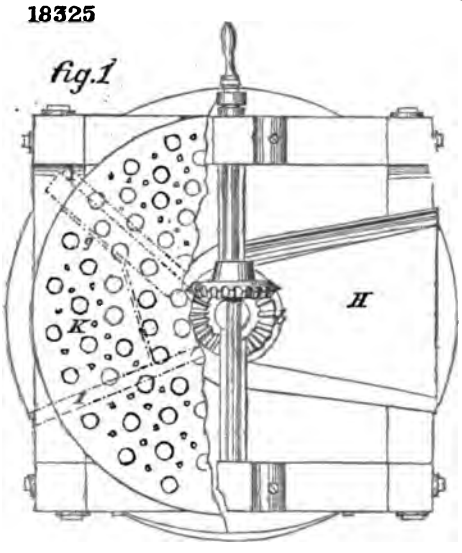

fig.2

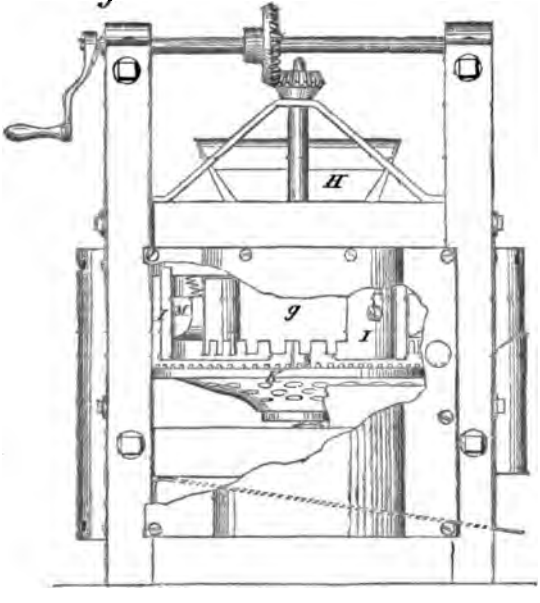

17909

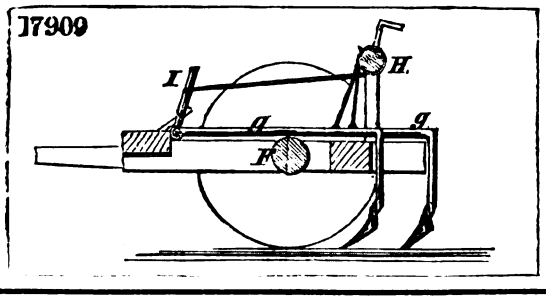

18342

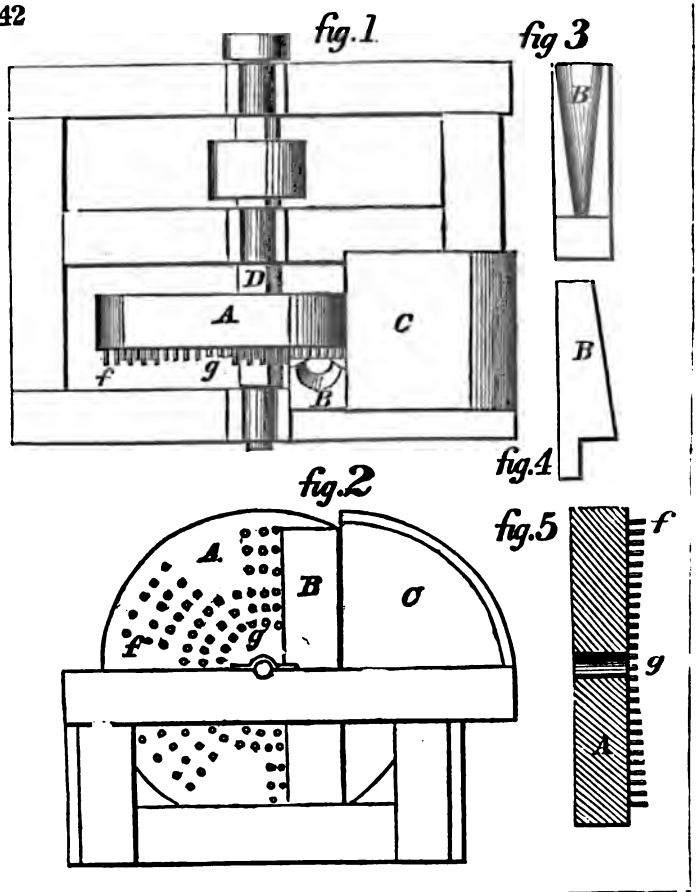

18139

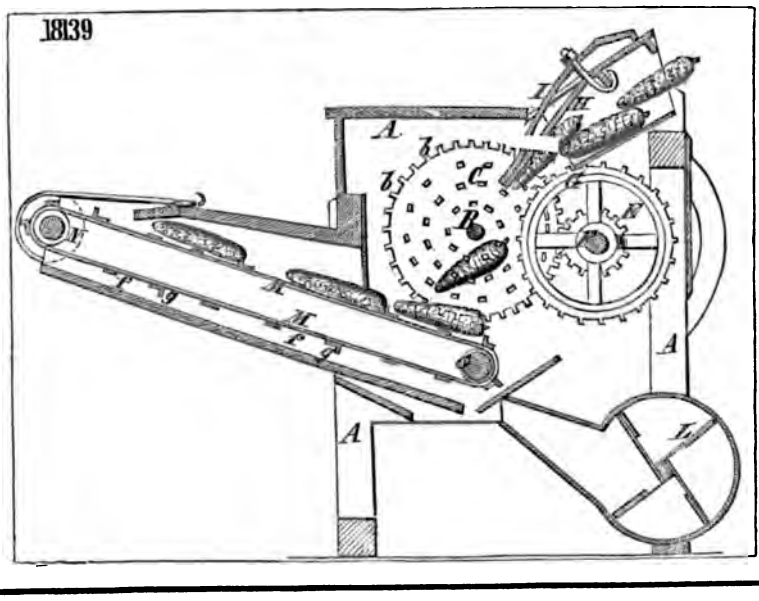

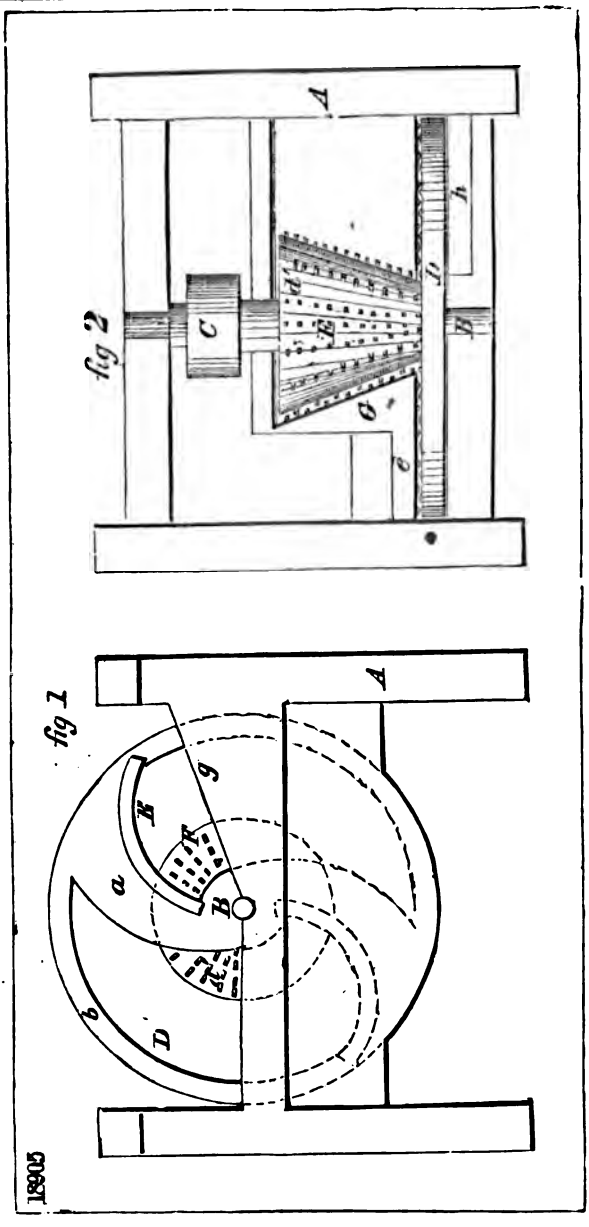
fig 1
fig 2
A
B
C
D
E
F
G
a
b
c
d
e
g
h
18905

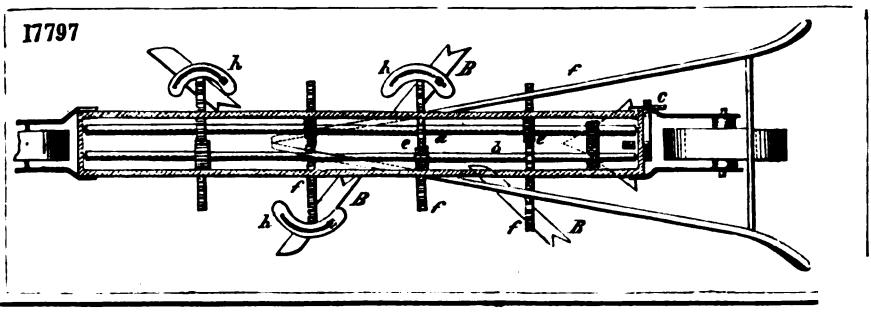
17797
A
B
C
f

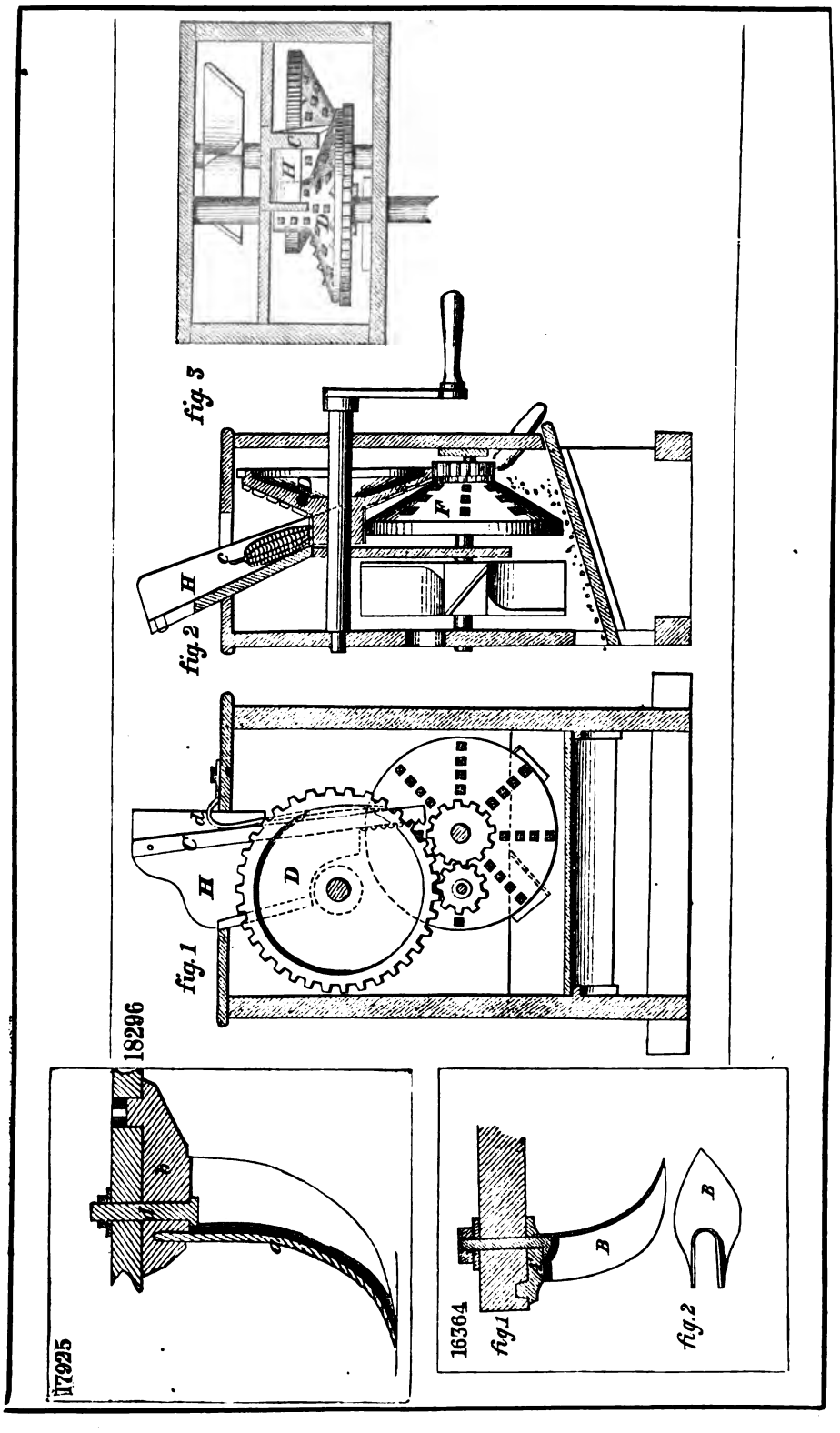
17925
18296
fig. 1
fig. 2
fig. 3
16364
fig. 1
fig. 2

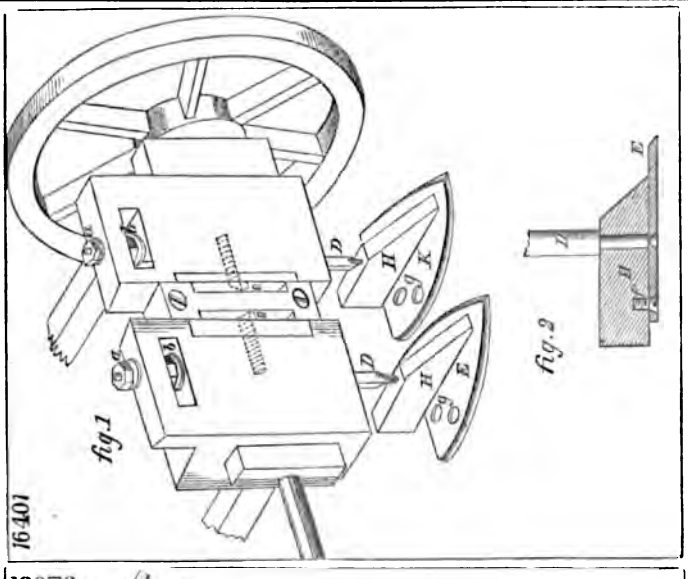
16401
fig.1
fig.2

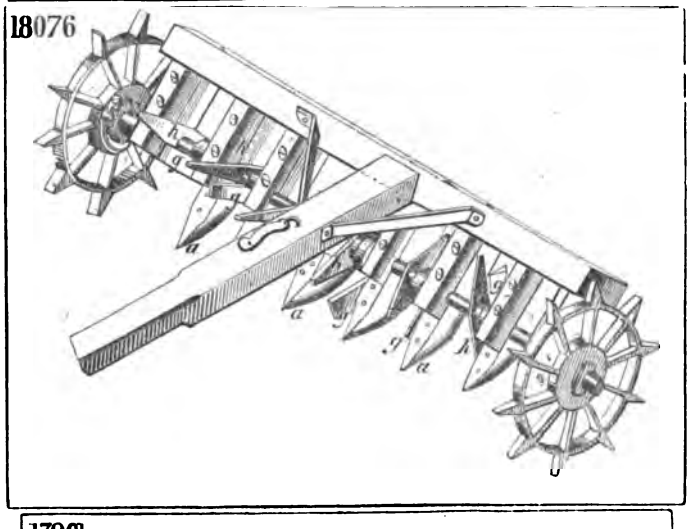
18076

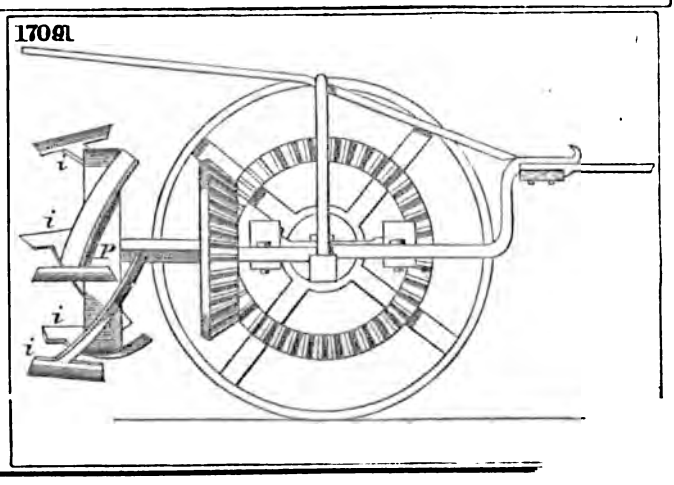
17091

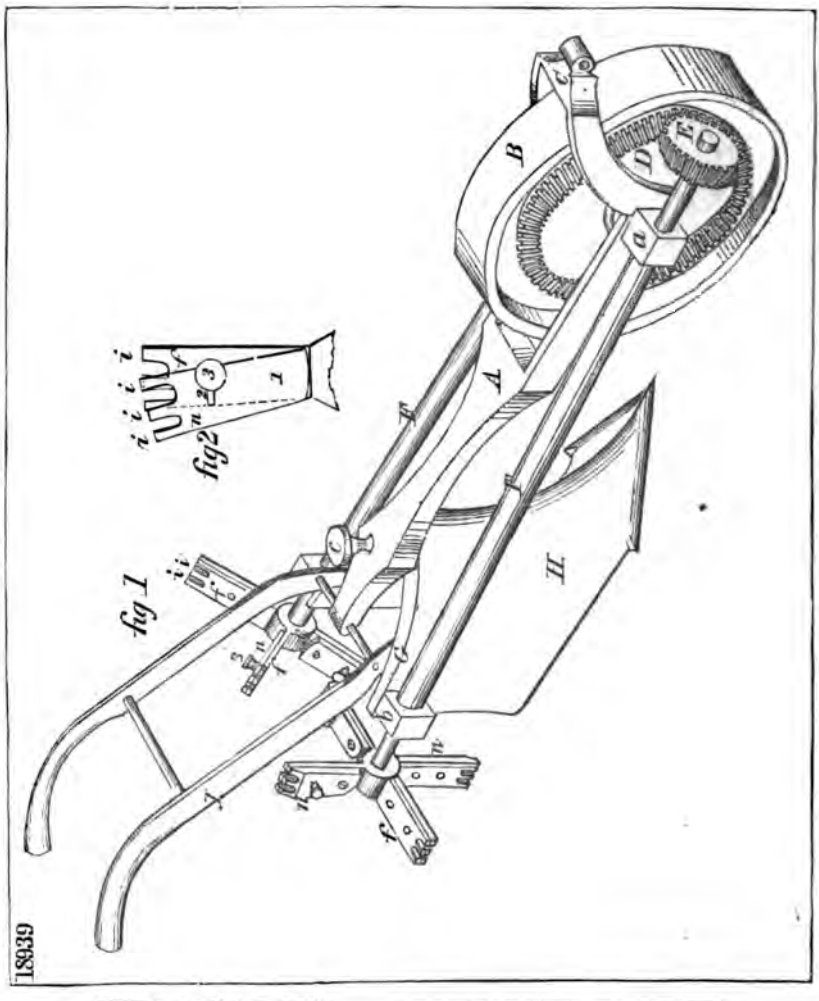
18939
fig 1
fig 2

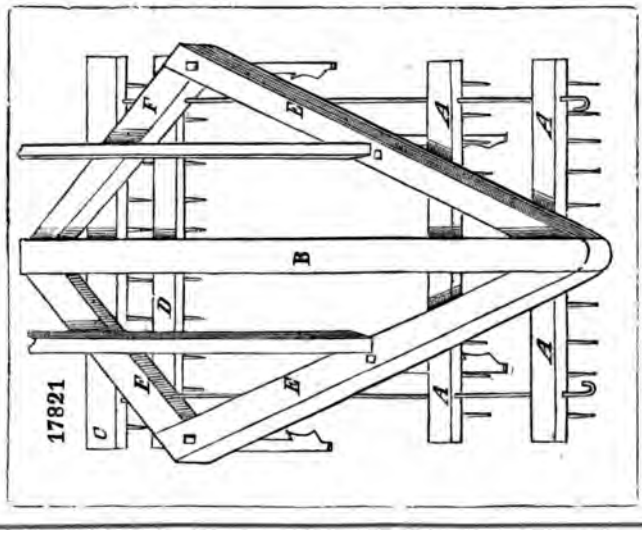
17821

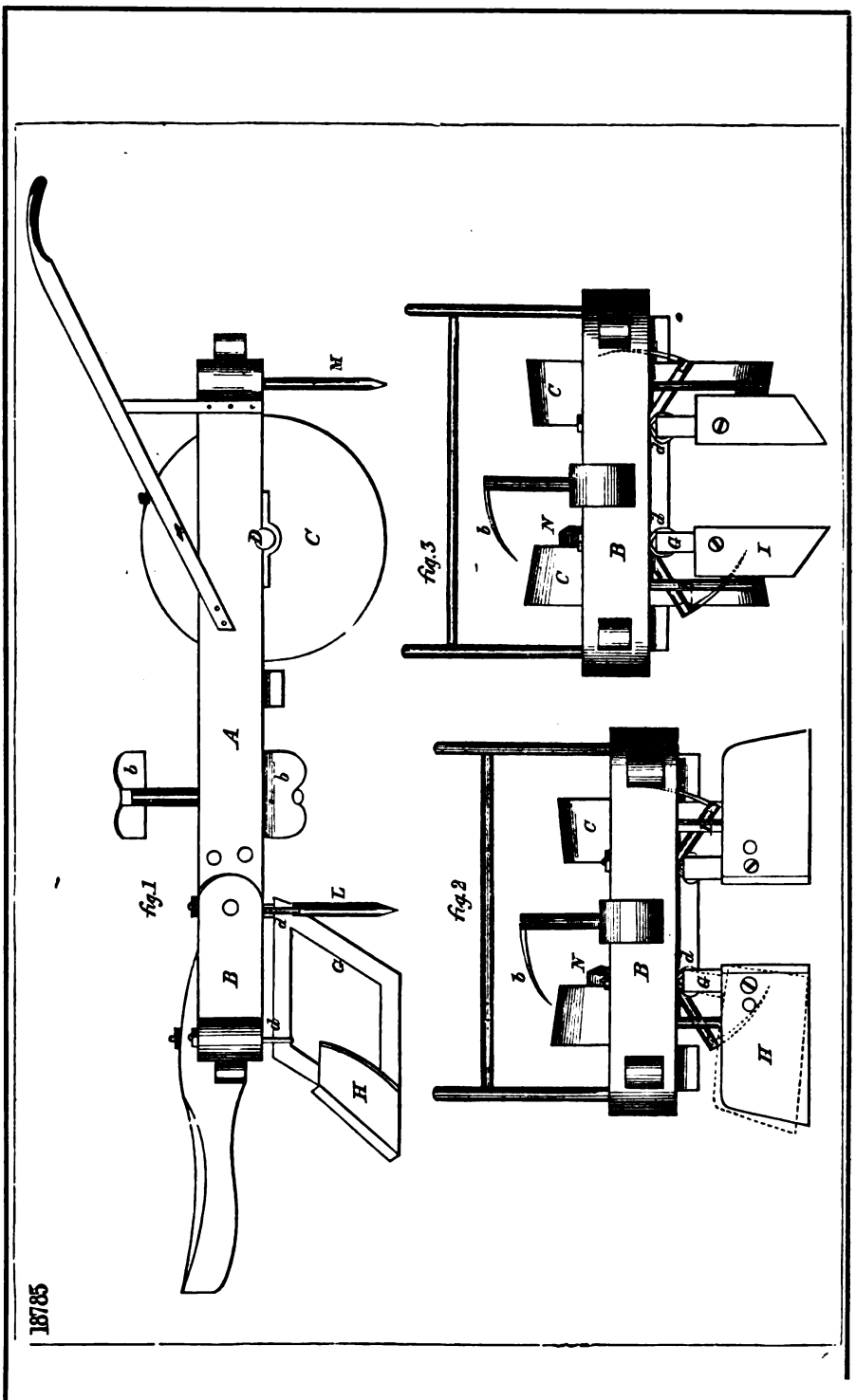
18785
fig.1
fig.2
fig.3
A
B
C
D
G
H
I
L
M
N
b
d

18520

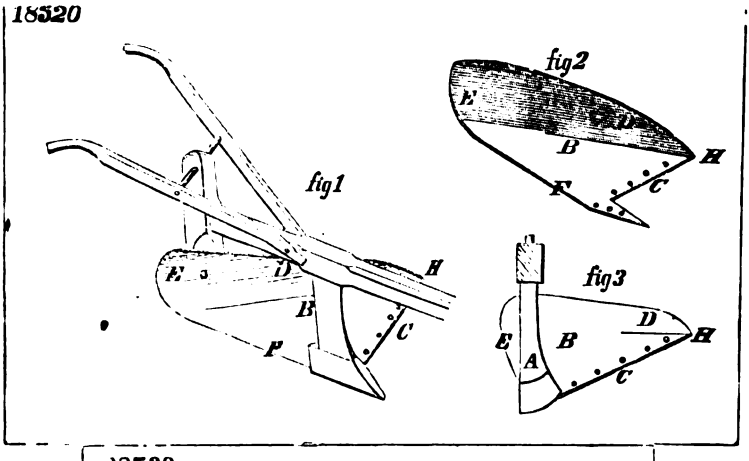

18530

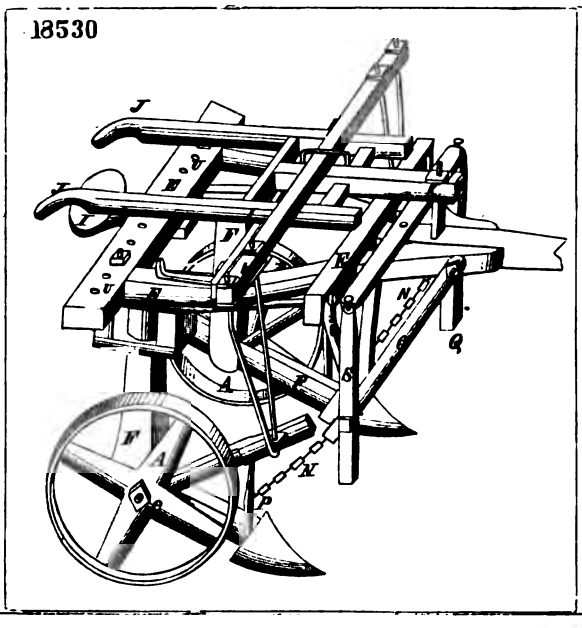

18073

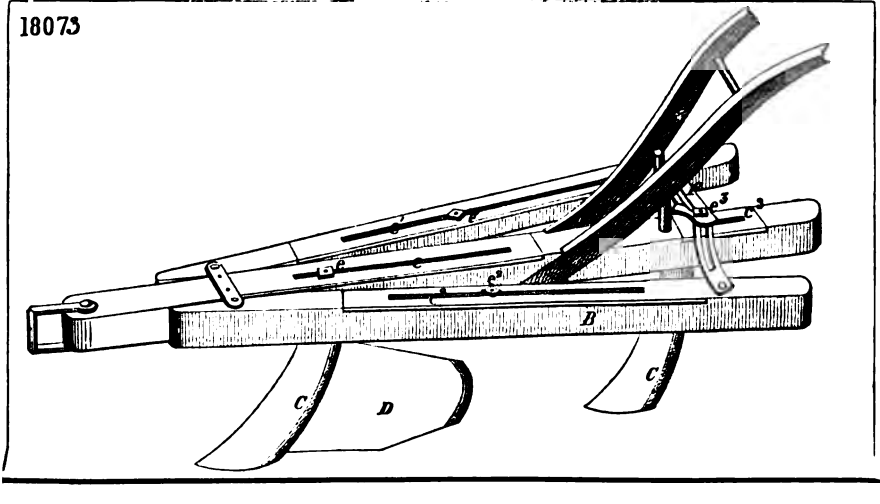

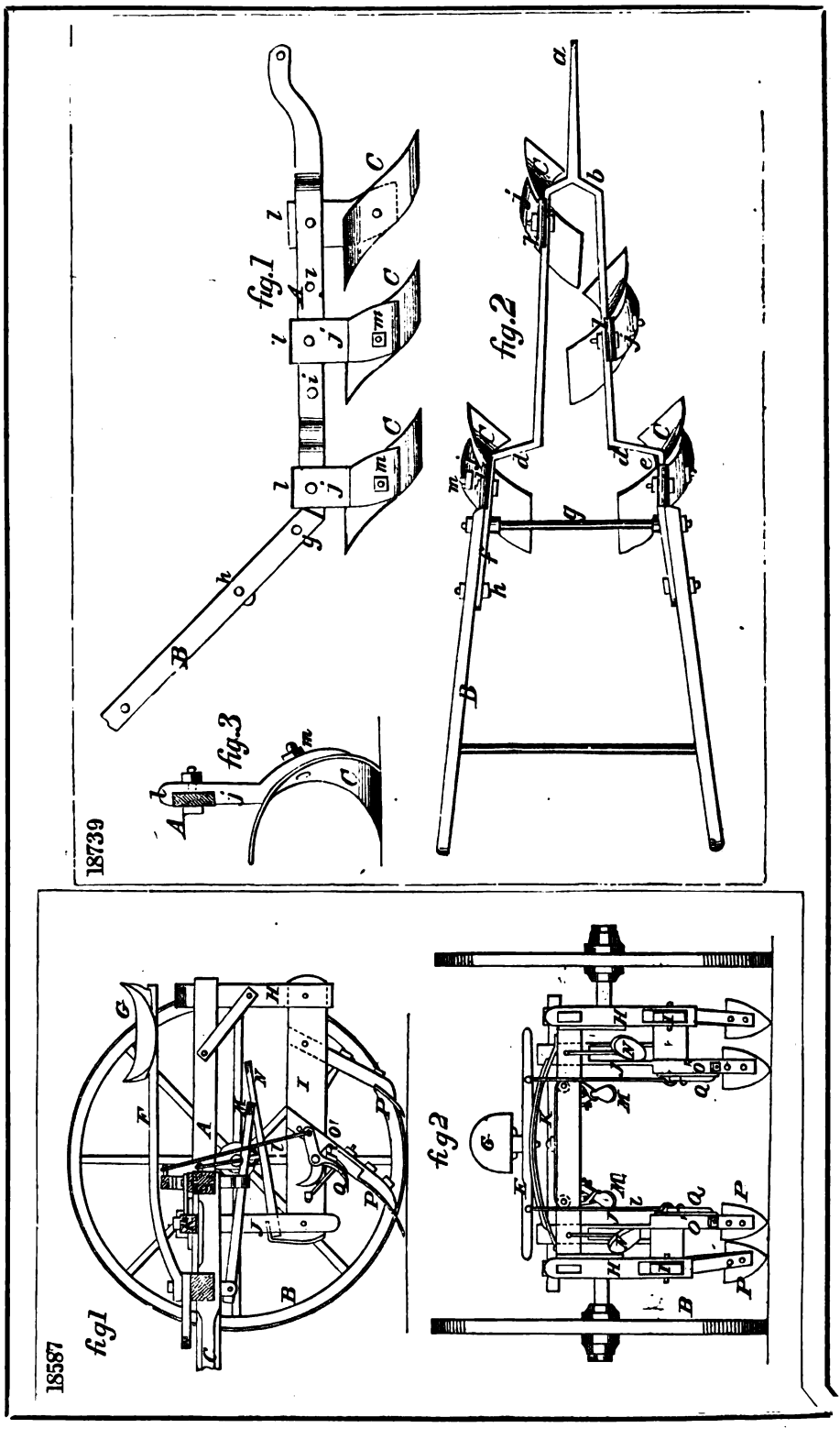
18739
fig.1
fig.2
fig.3
18587
fig1
fig2

18330

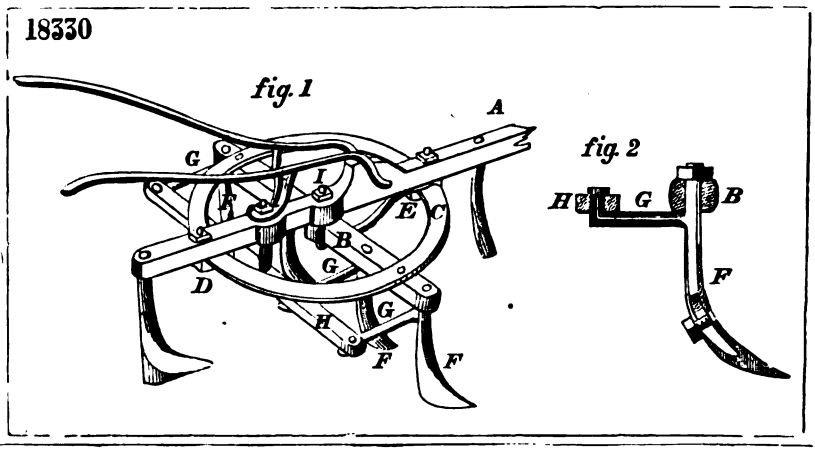
fig. 1
A
G
I
F
E
C
B
G
D
H
G
F
F
fig. 2
H
G
B
F

18840

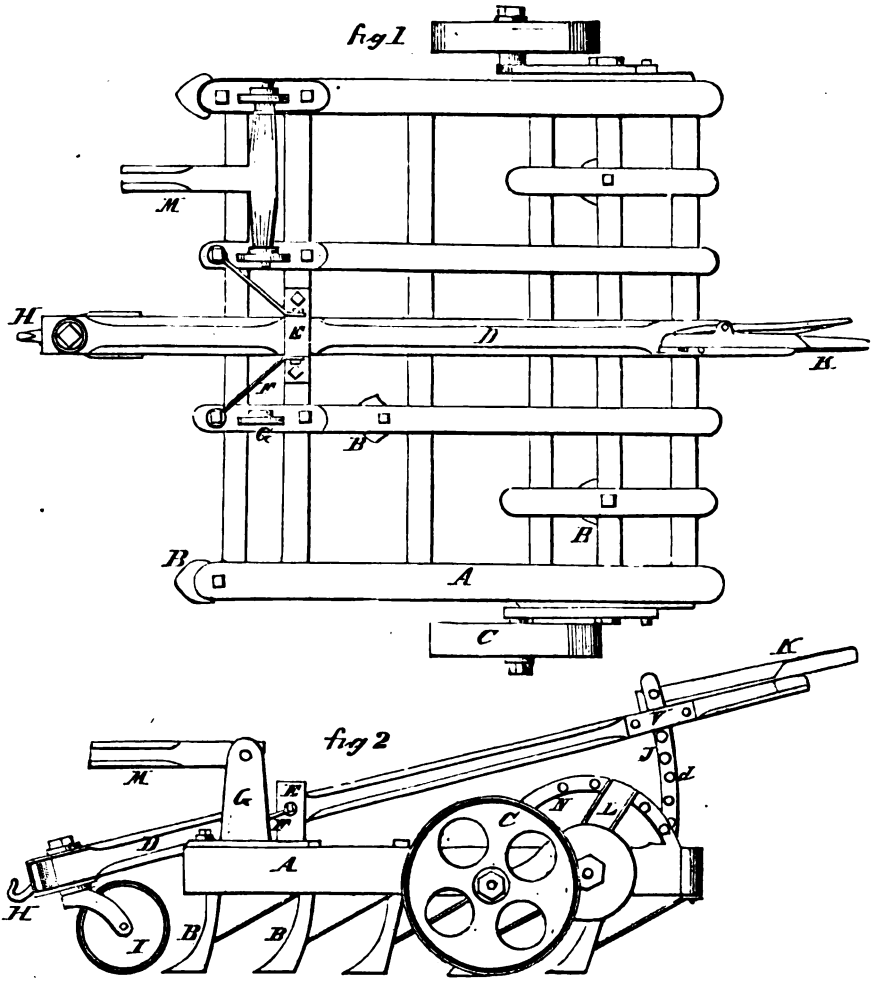
fig. 1
M
H
E
D
K
M
G
B
B
B
A
C
K
fig 2
M
G
E
F
D
H
I
B
B
A
C
N
L
J
d

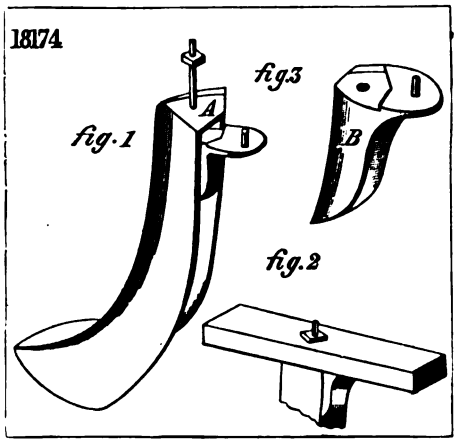
18174
fig.1
fig.3
fig.2
A
B

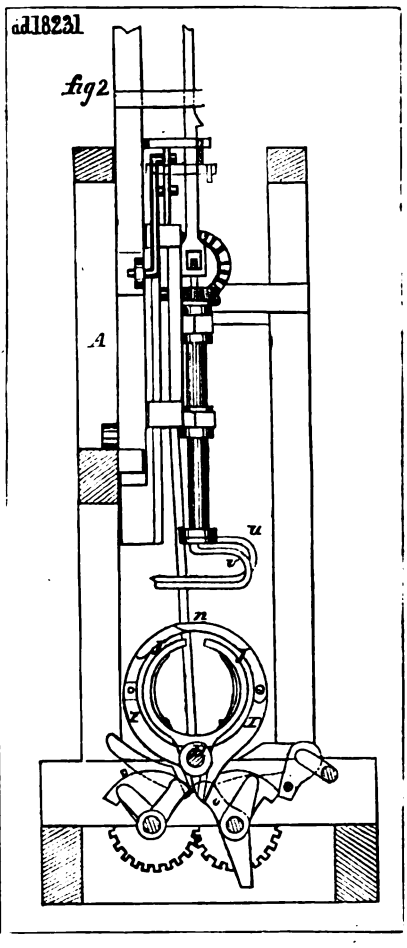
ad18231
fig2
A
u
v
n

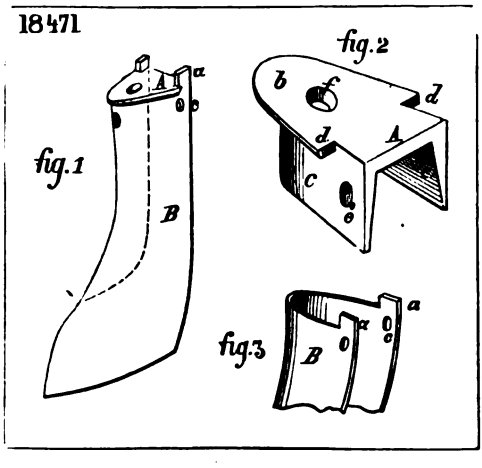
18471
fig.1
fig.2
fig.3
A
a
B
b
f
d
C

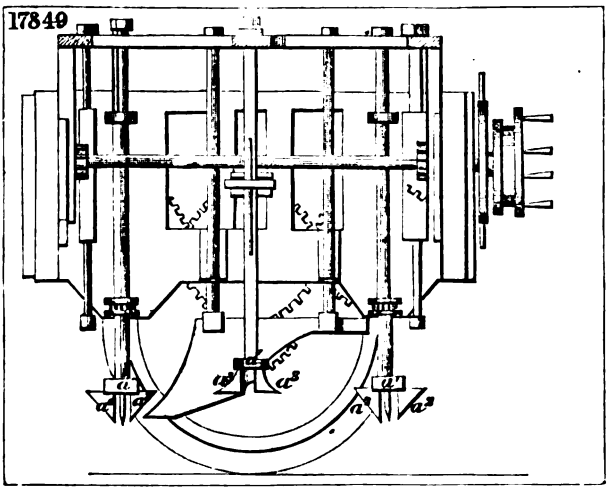
17849

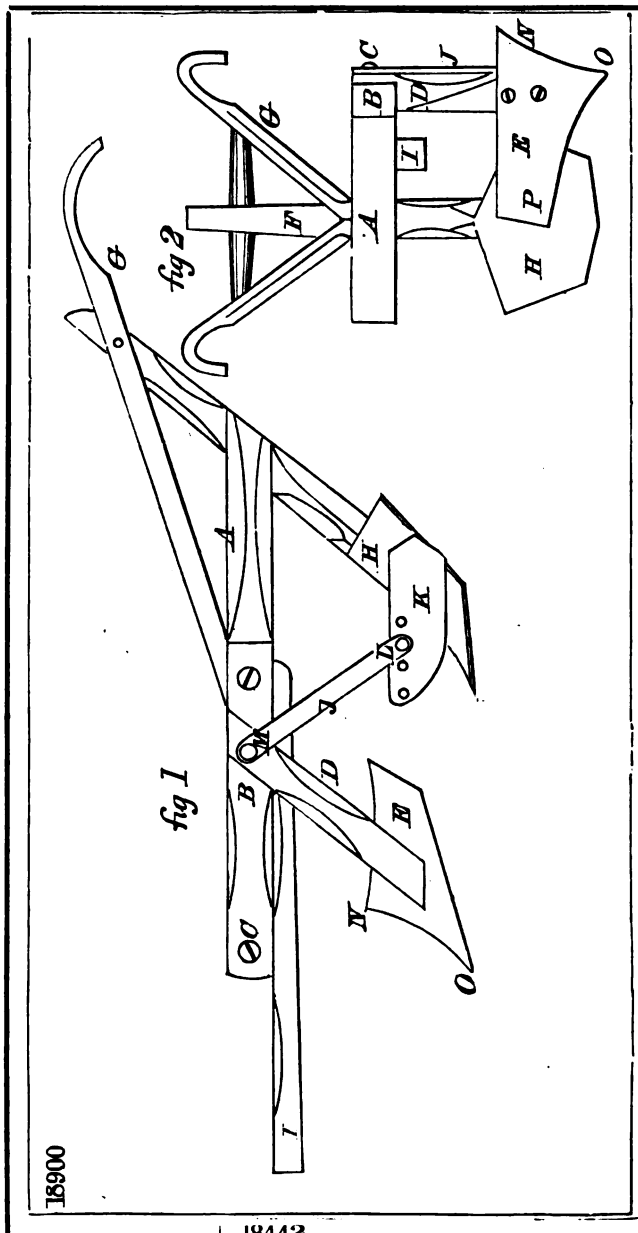
fig 1
fig 2
18900

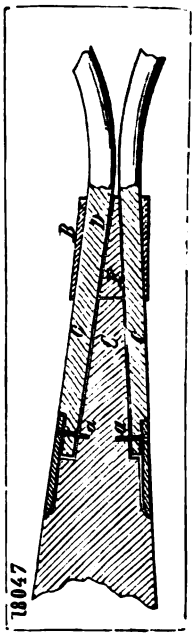
18047

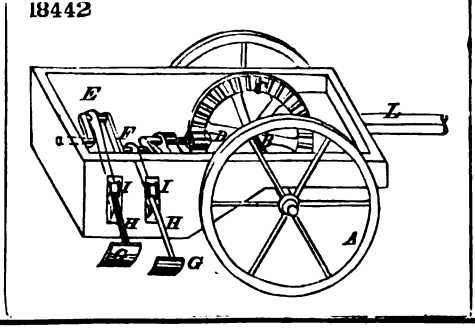
18442

18928

fig 1

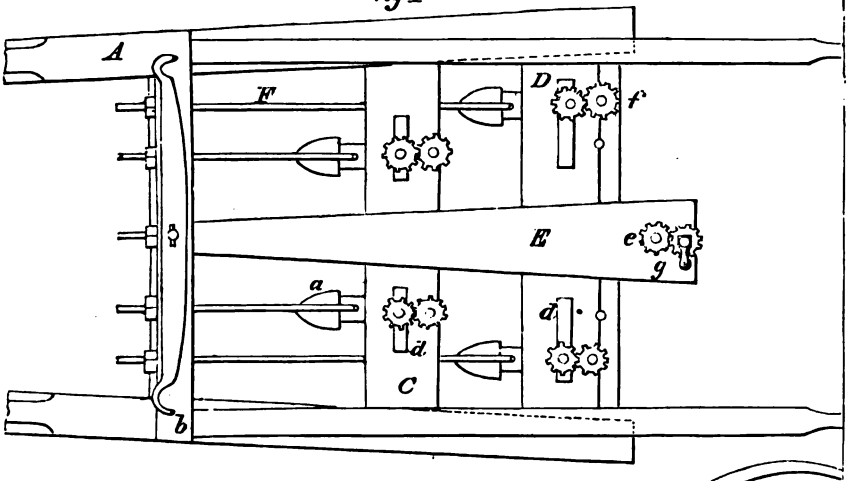

fig 2

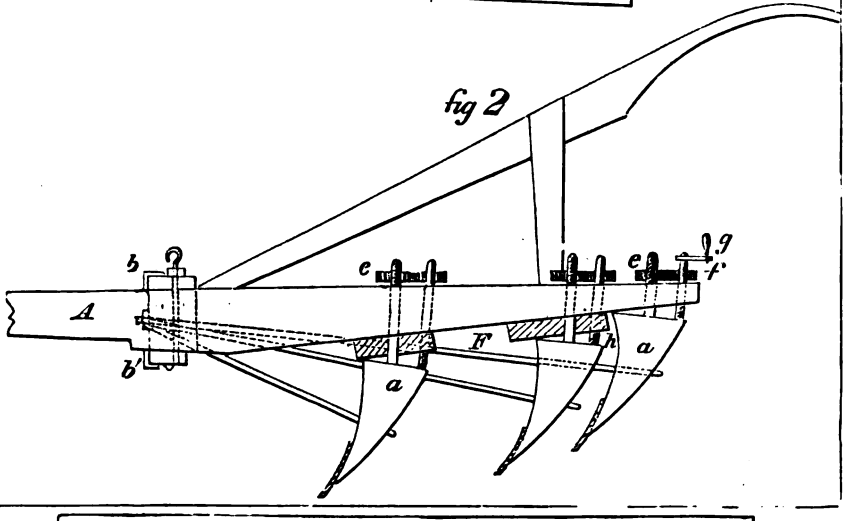

18714

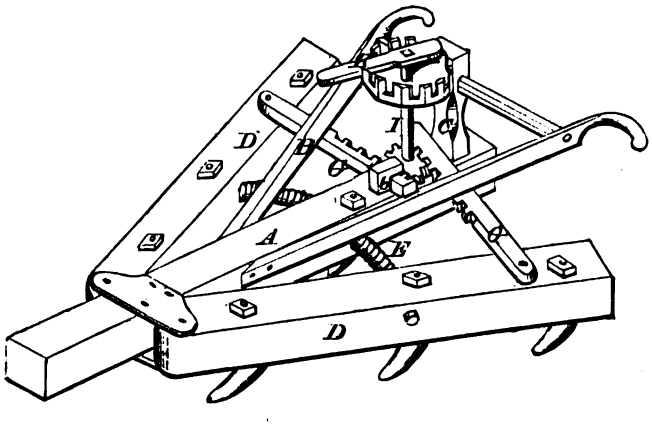

16540

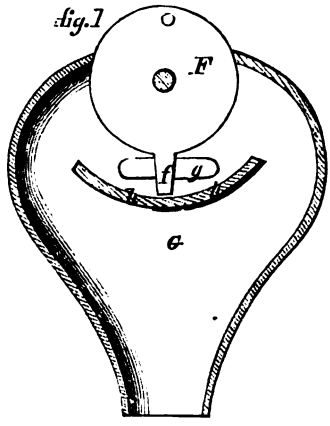

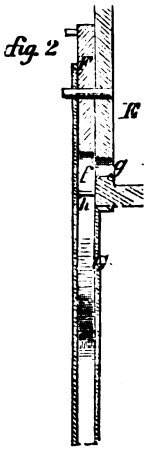

18317

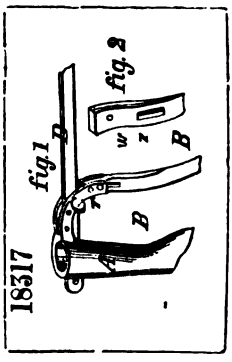

18503

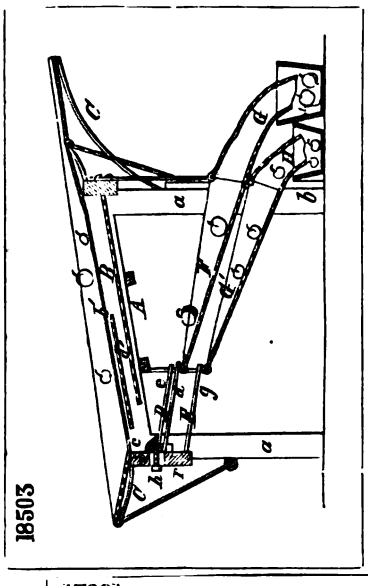

18476

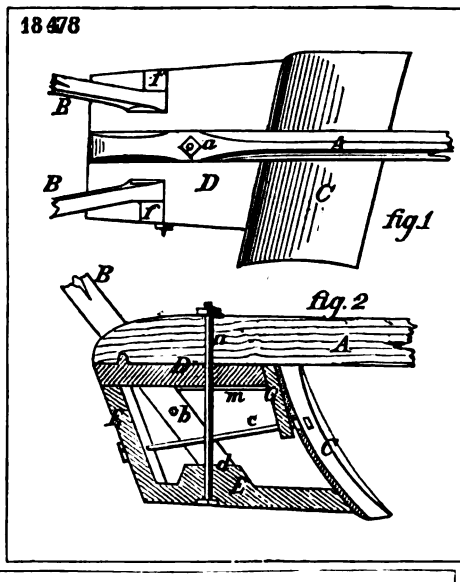

17391

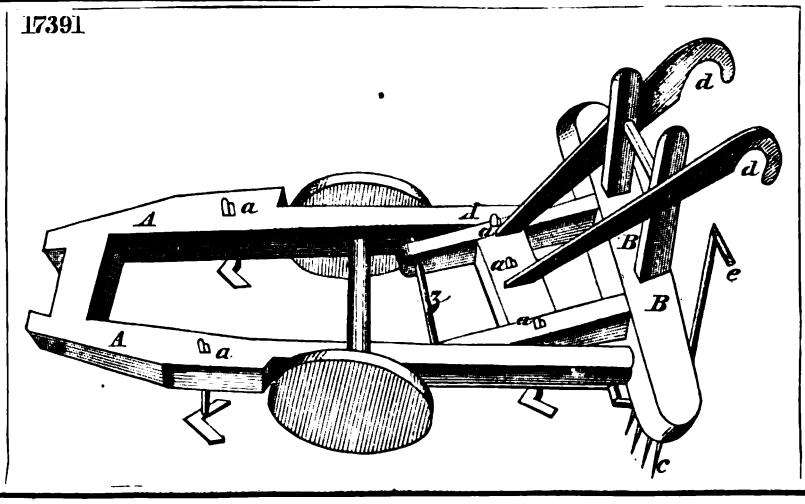

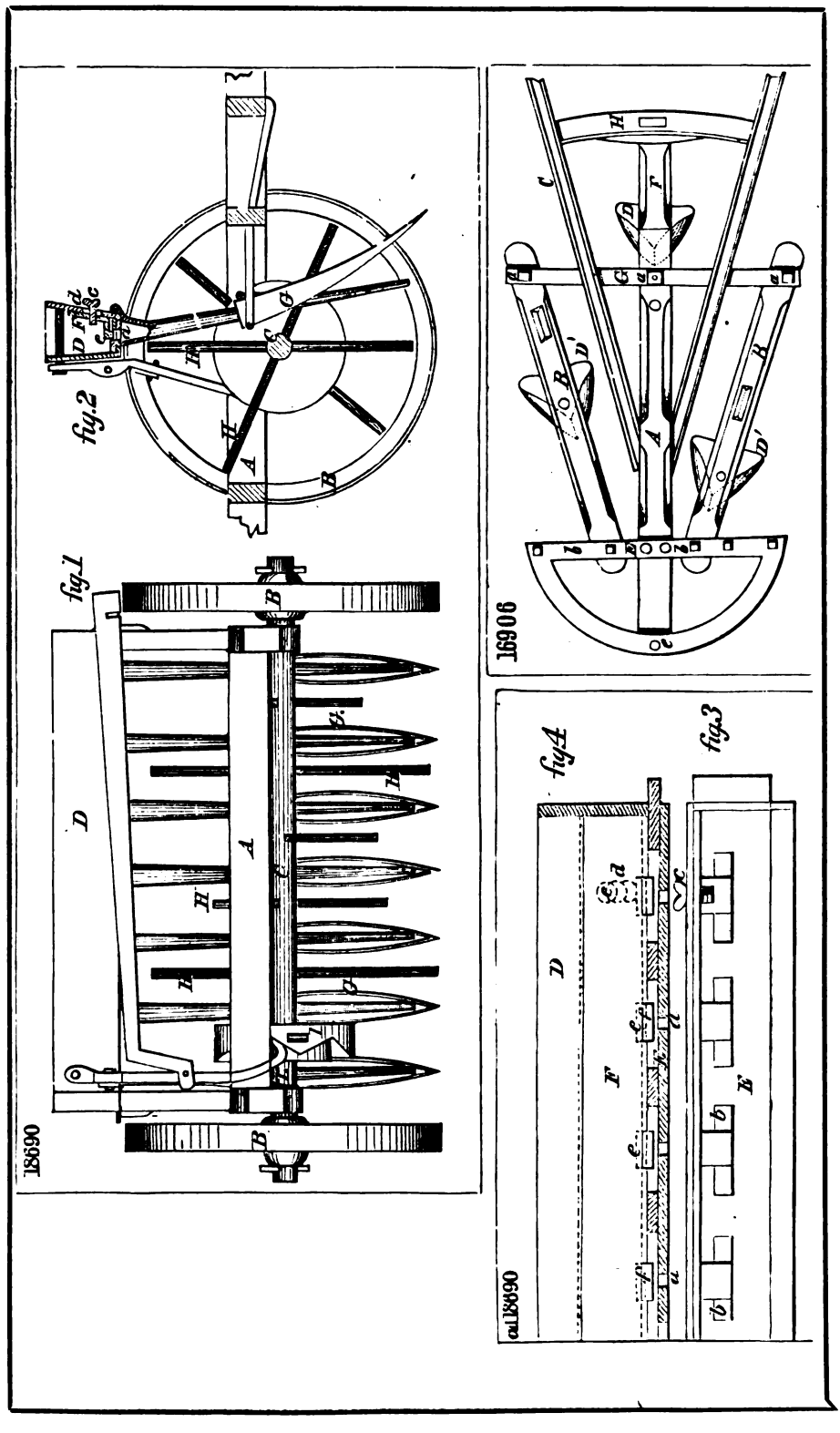
fig.1
fig.2
fig.3
fig.4
18690
16906
ad18690

18590

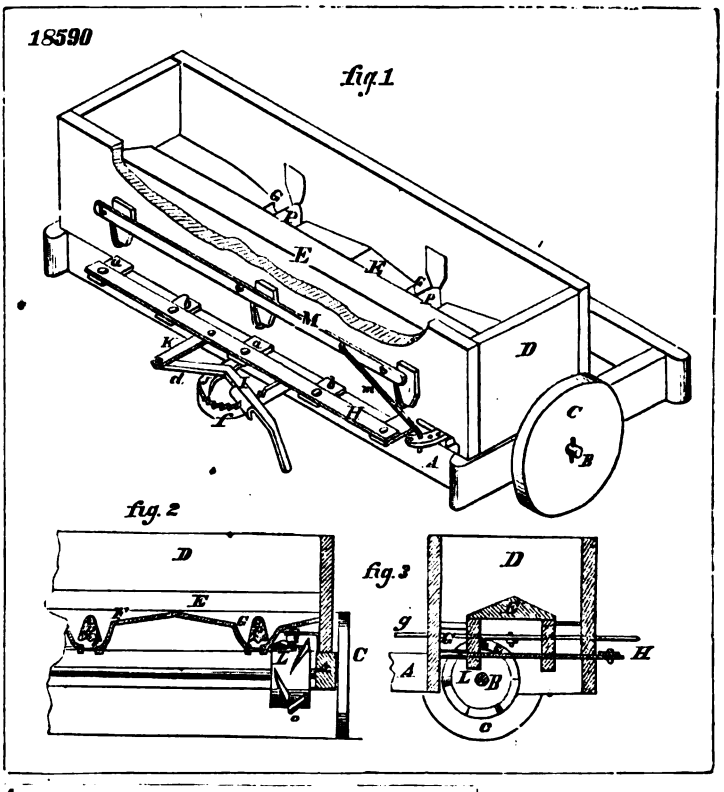

17144

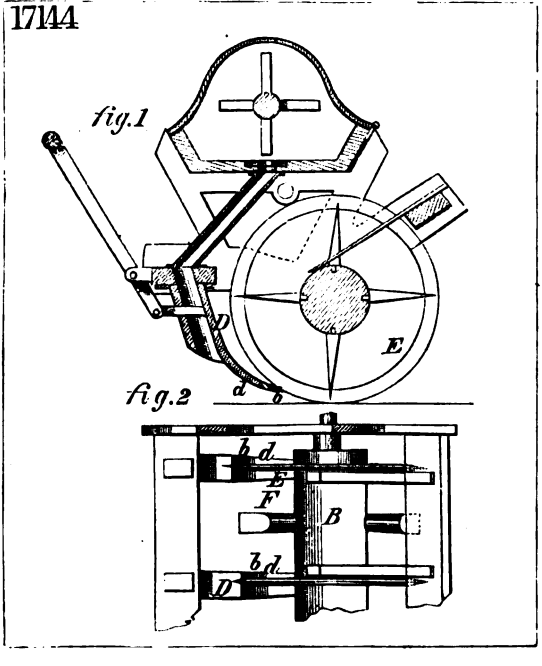

16547

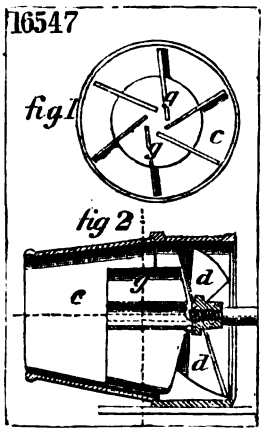

16476

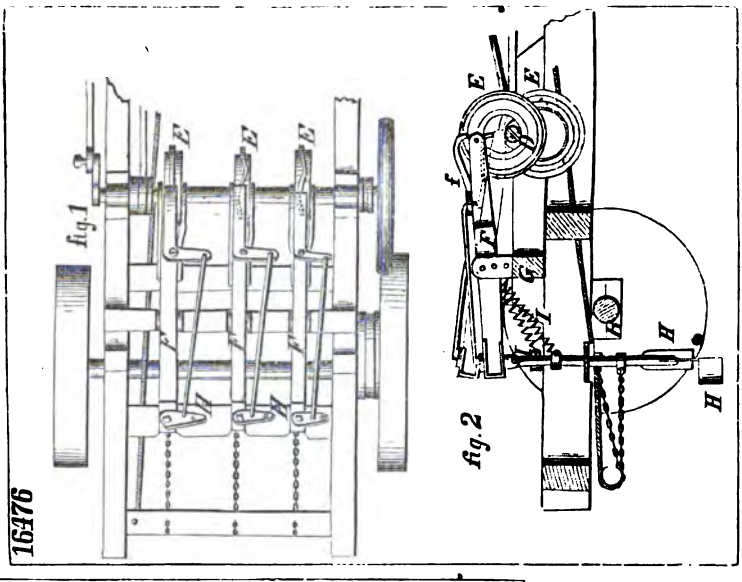

18804

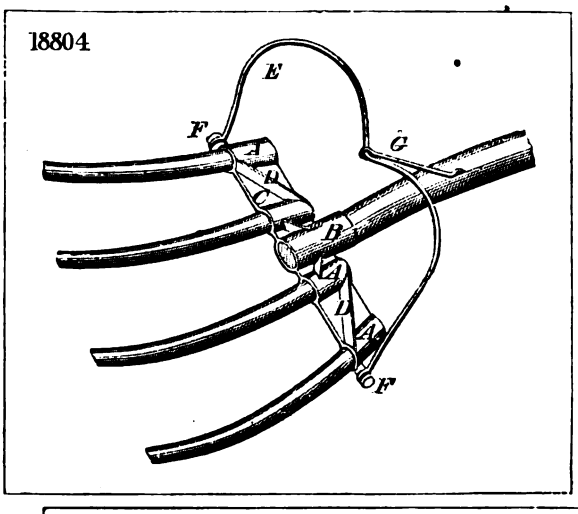

16588

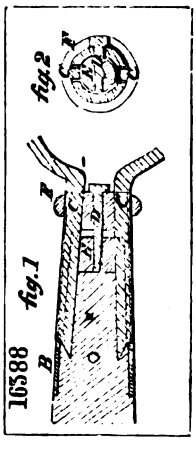

18670

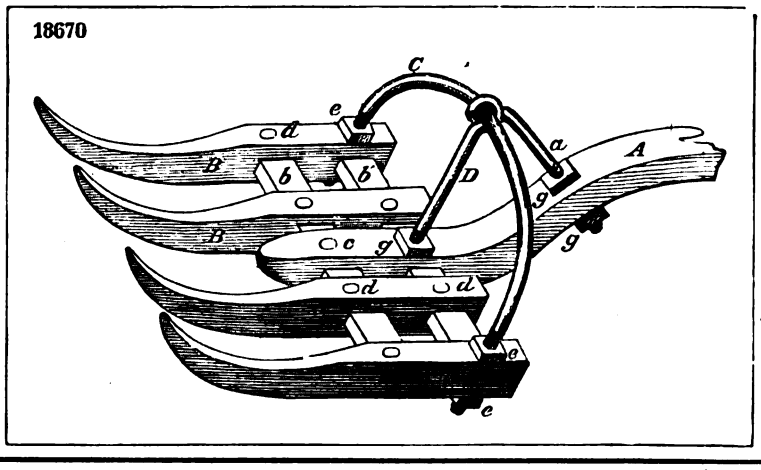

18688

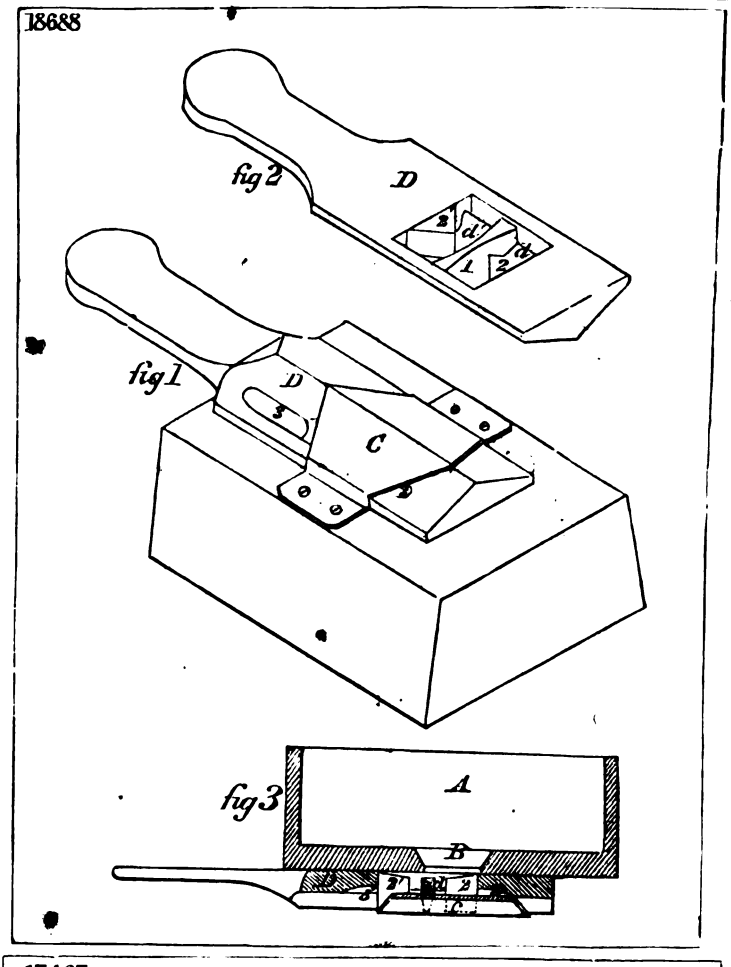

17467

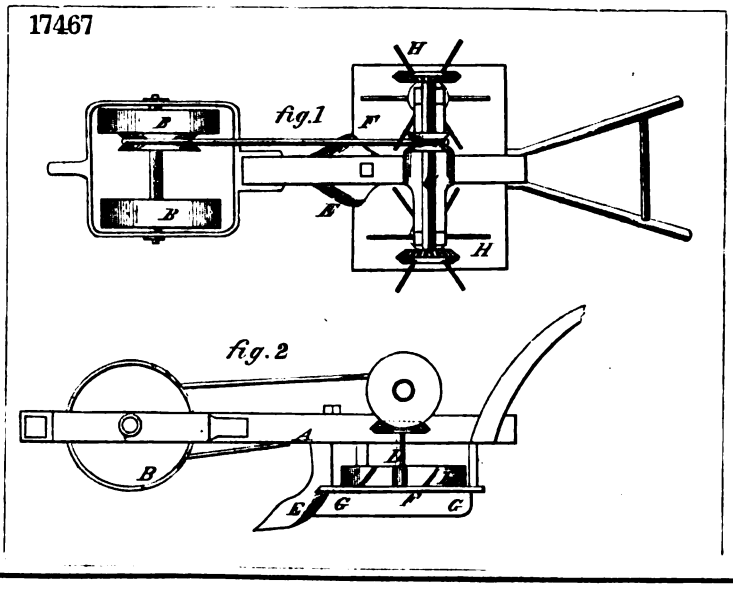

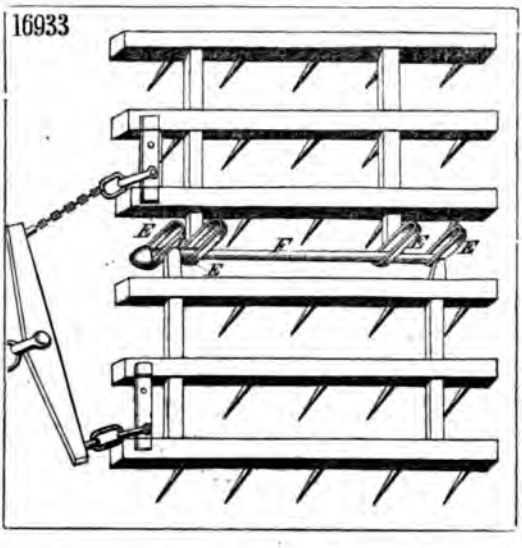
16933
E
F
E
E
E

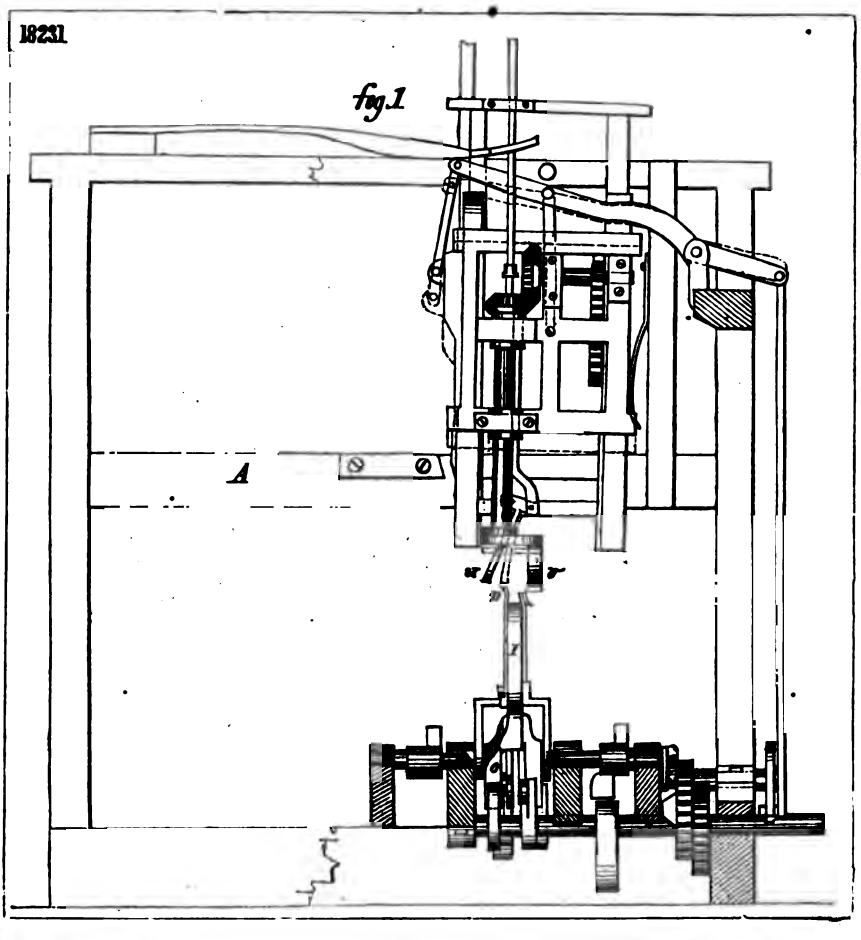
18231
fig.1
A

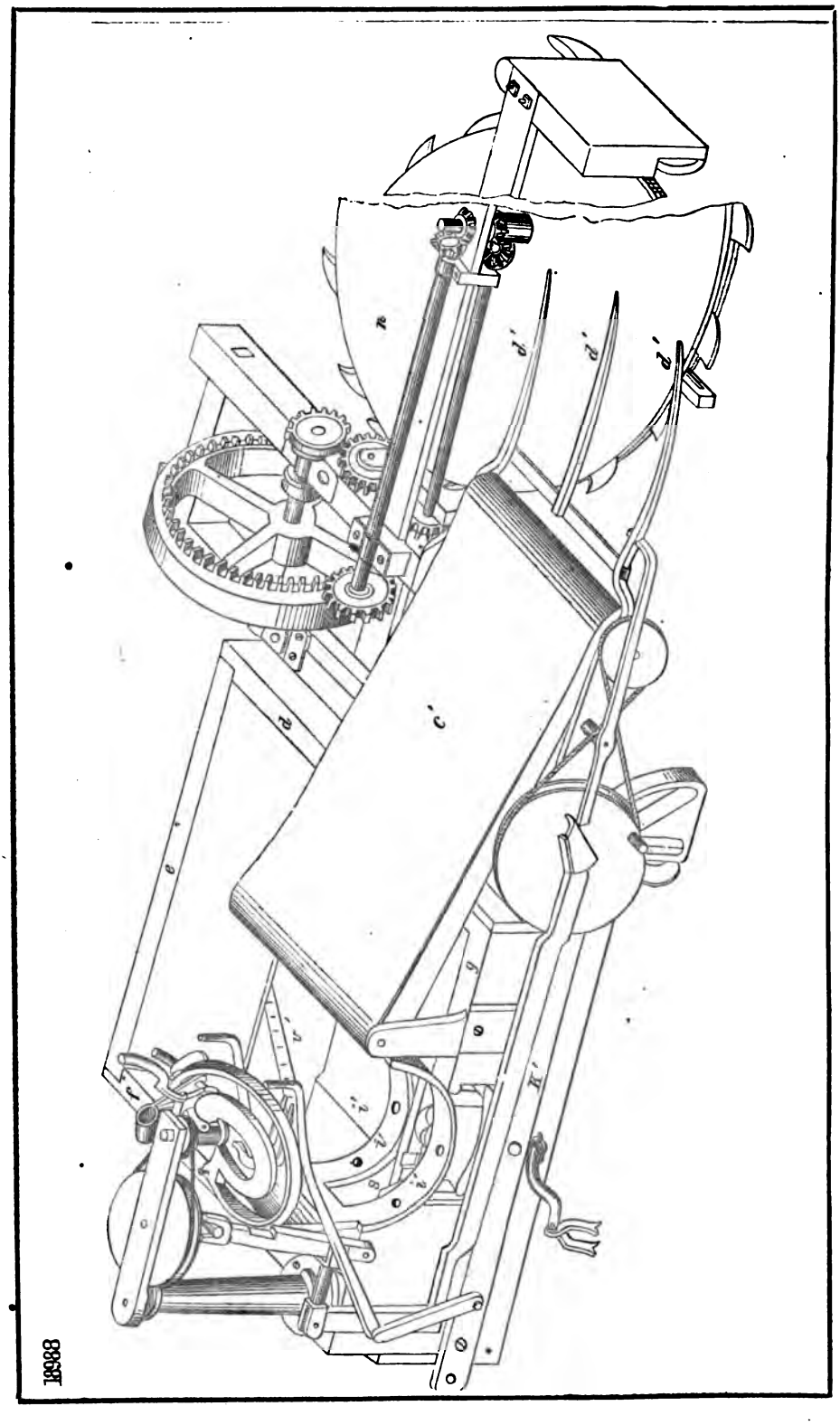

18888

18464

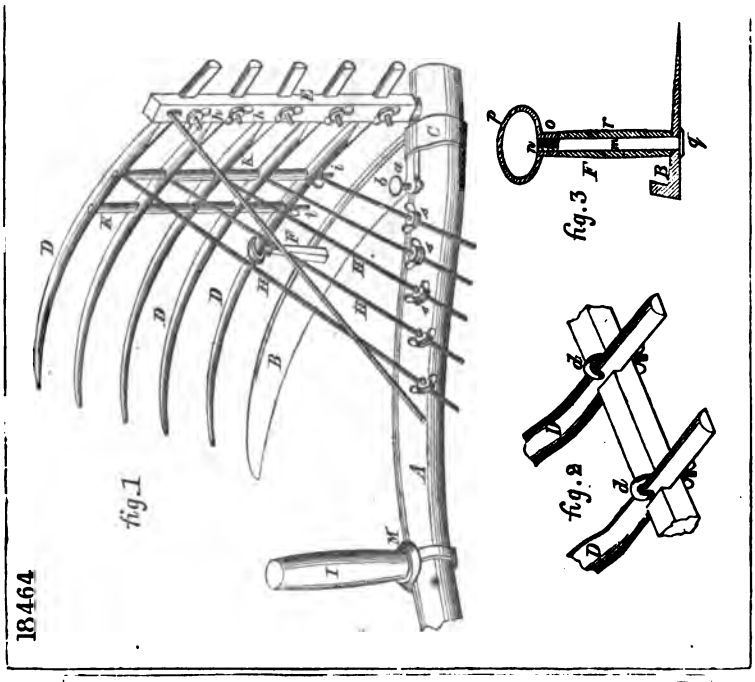

16815

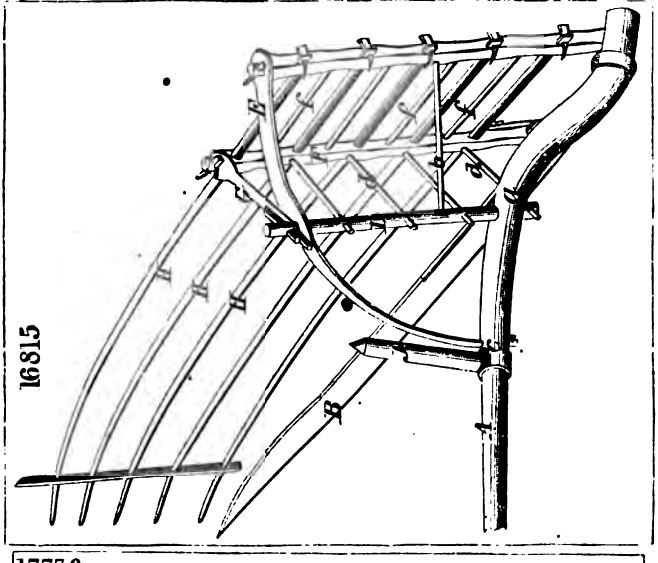

17739

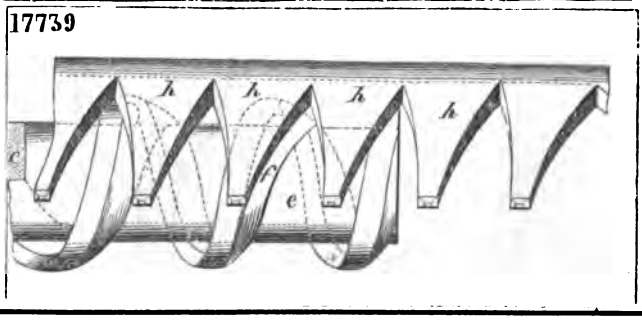

17223

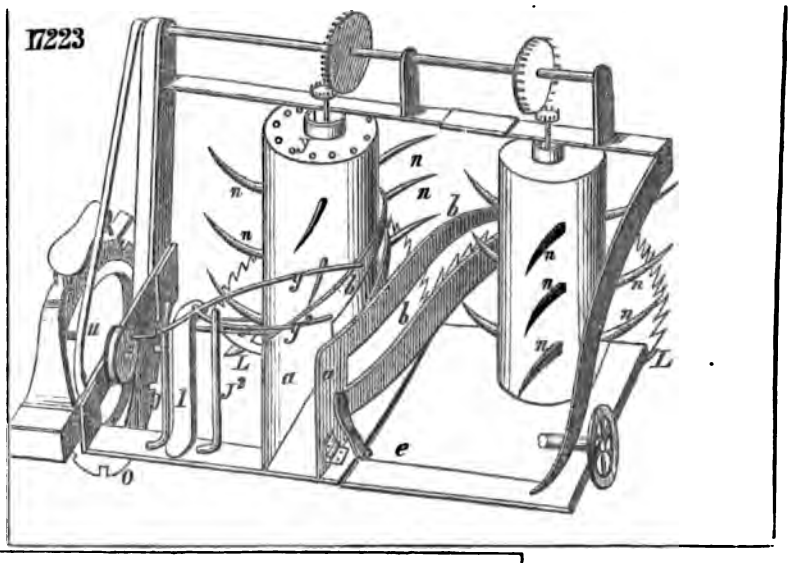

16866

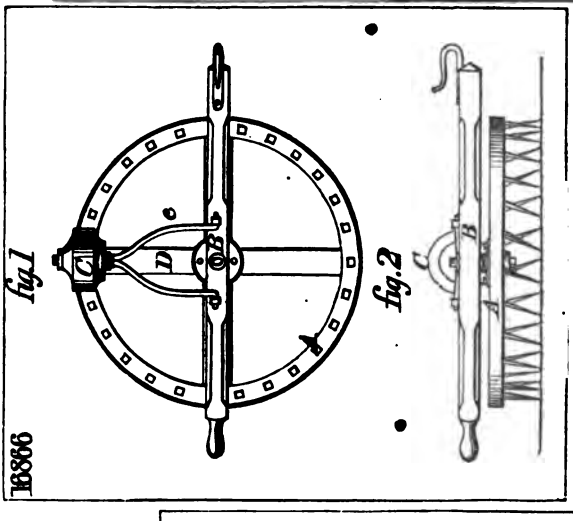

17894

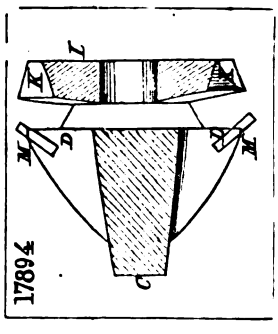

18582

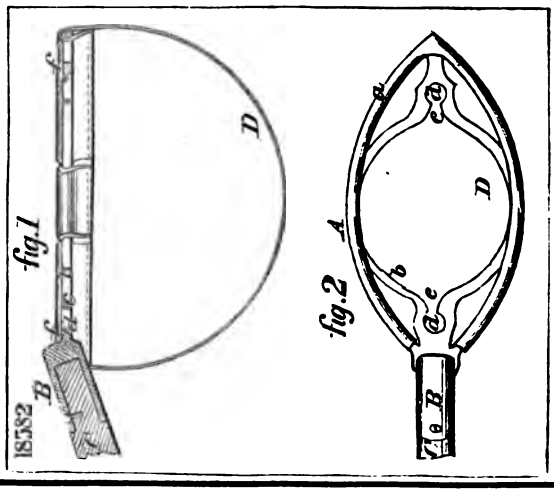

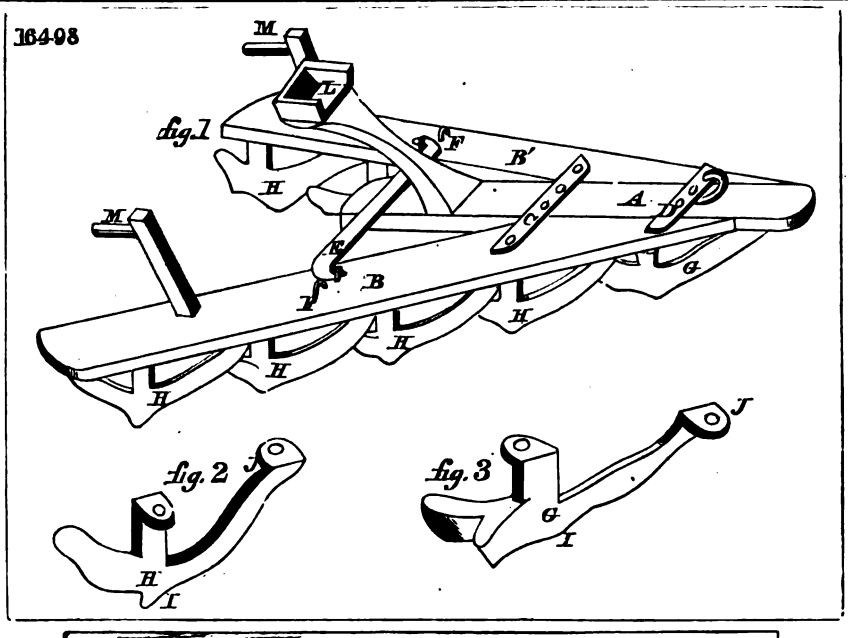
16498
fig. 1
fig. 2
fig. 3

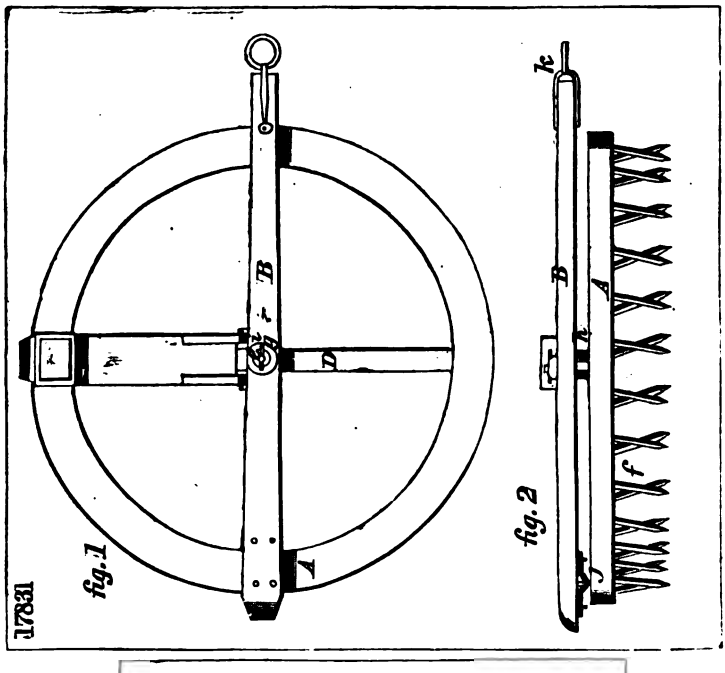
17831
fig. 1
fig. 2

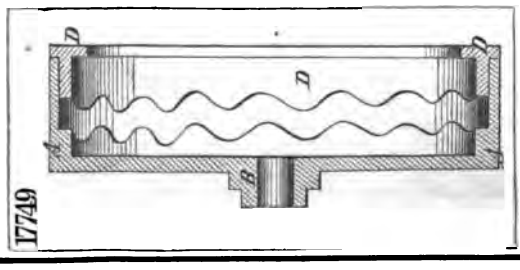
17749

17135

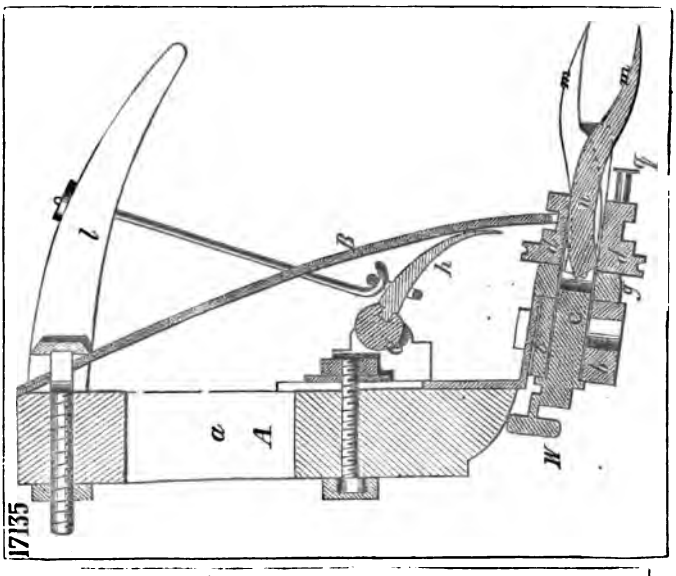

17121

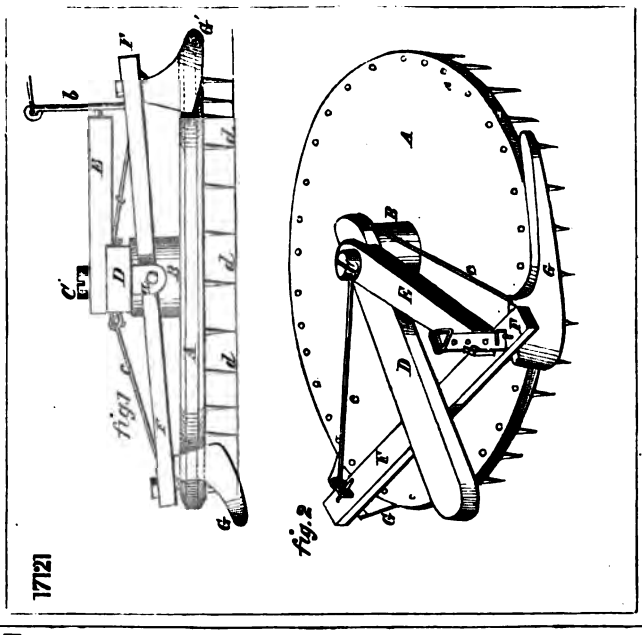

17151

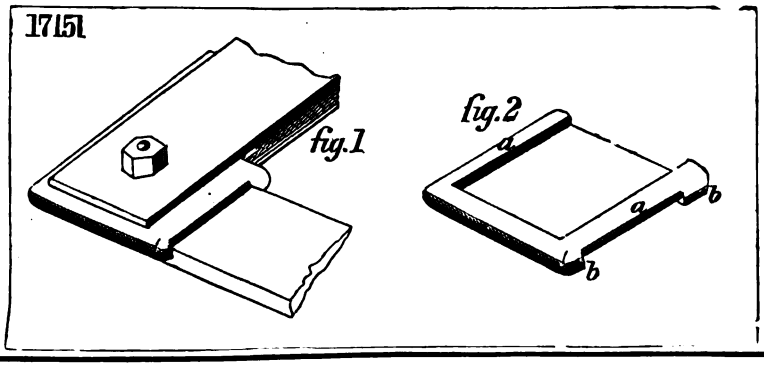

18462

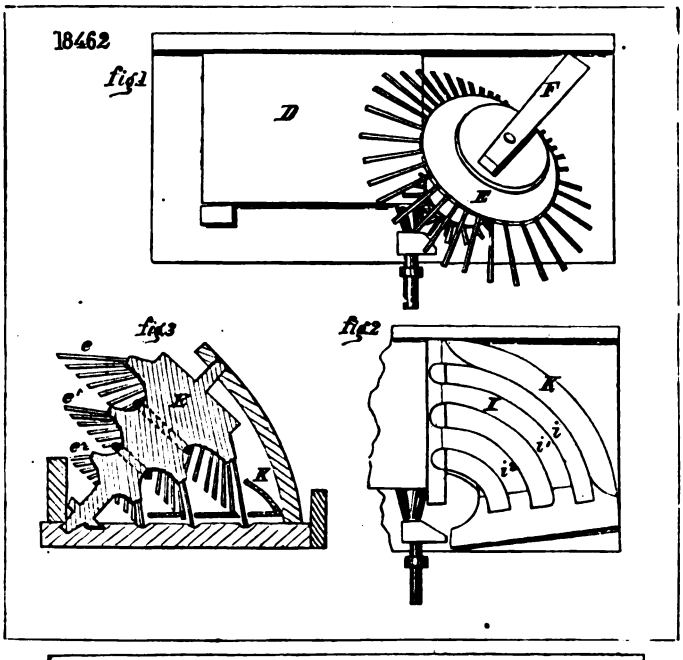

16658

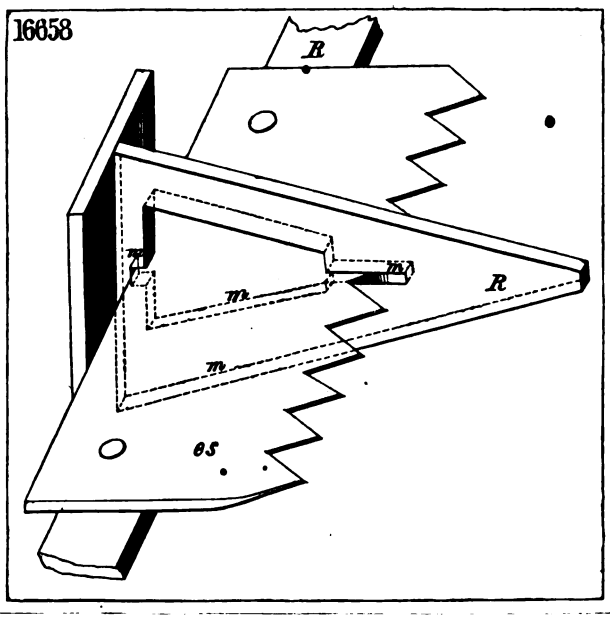

16445

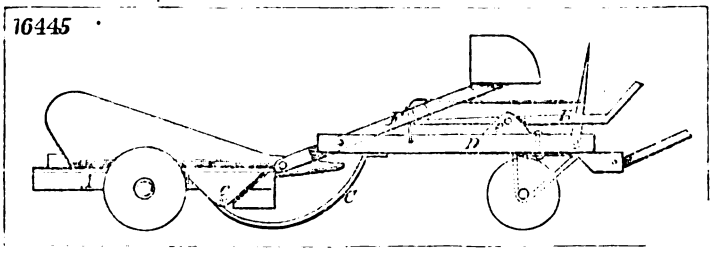

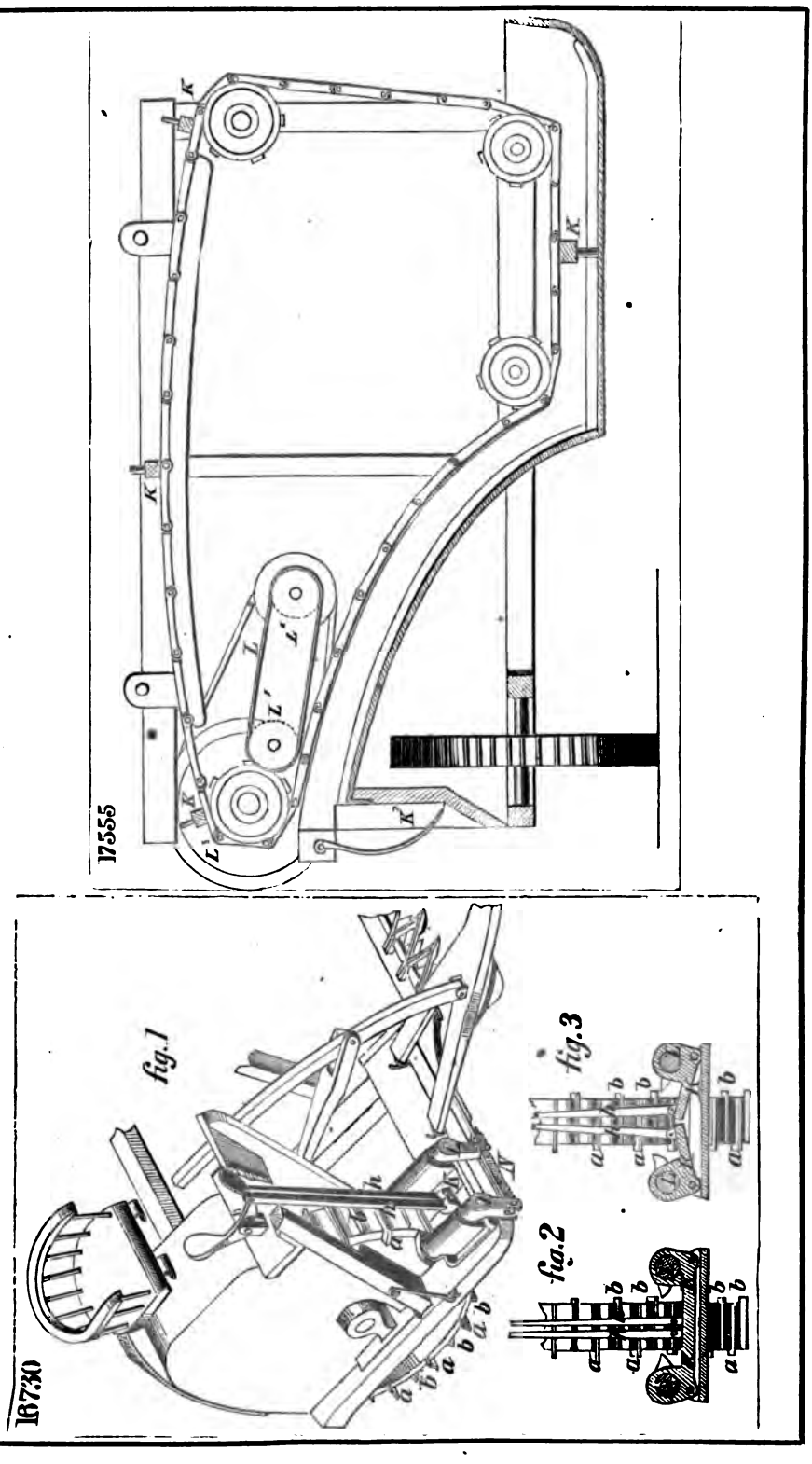
17555
K
K
K
K
L
L'
L'
L'
K'
fig.1
fig.2
fig.3
18730

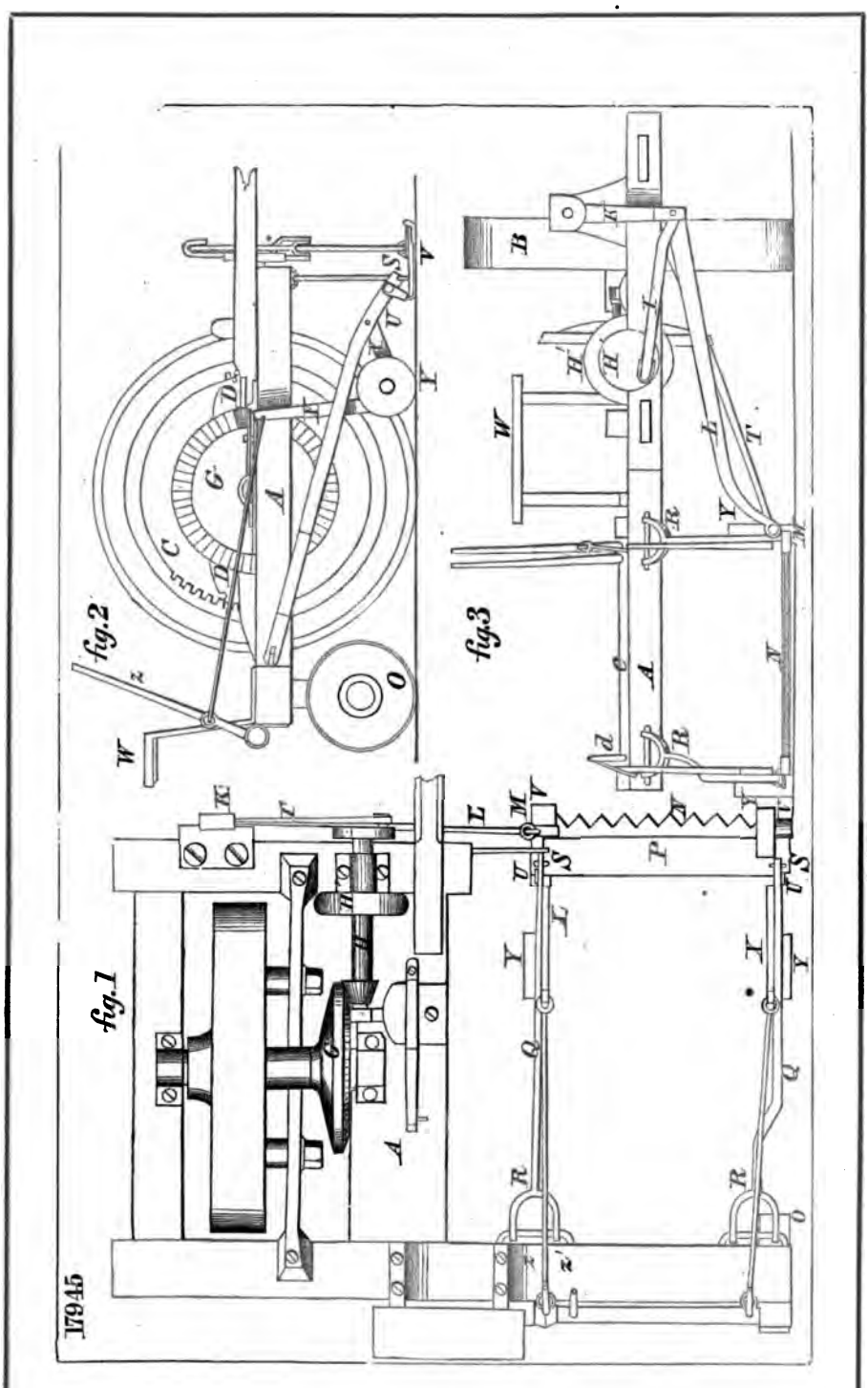
17945
fig.1
fig.2
fig.3

17134

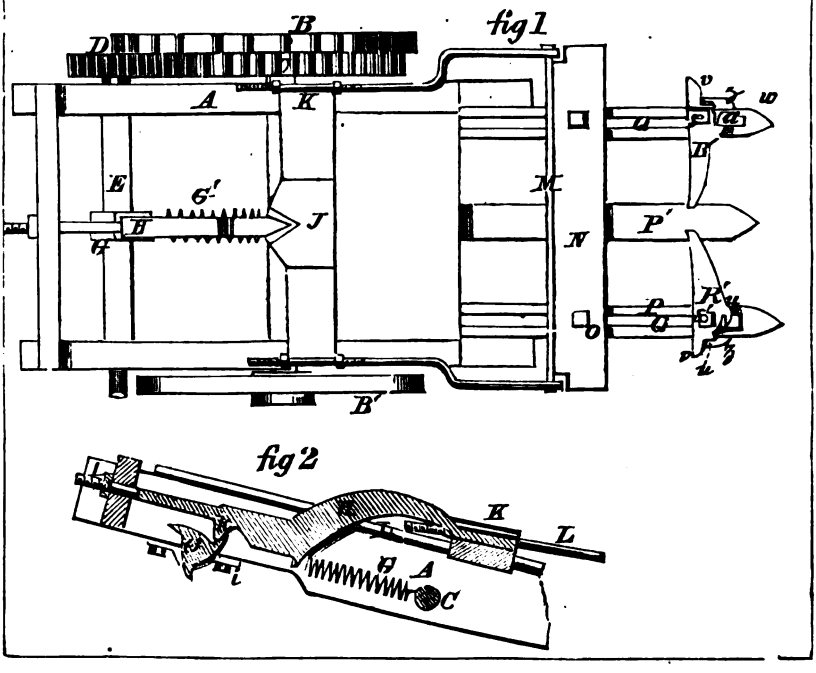

17678

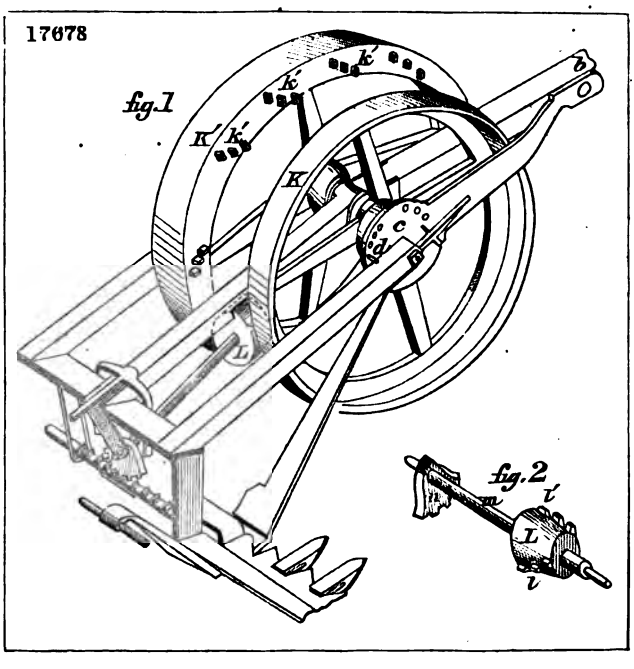

16726

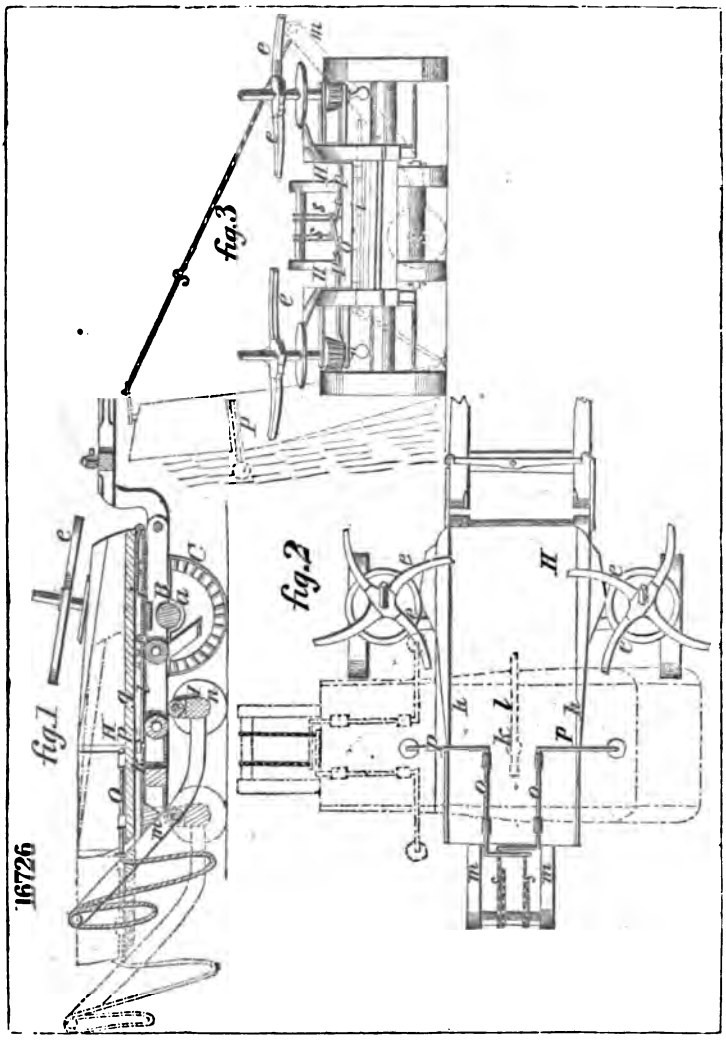

17367

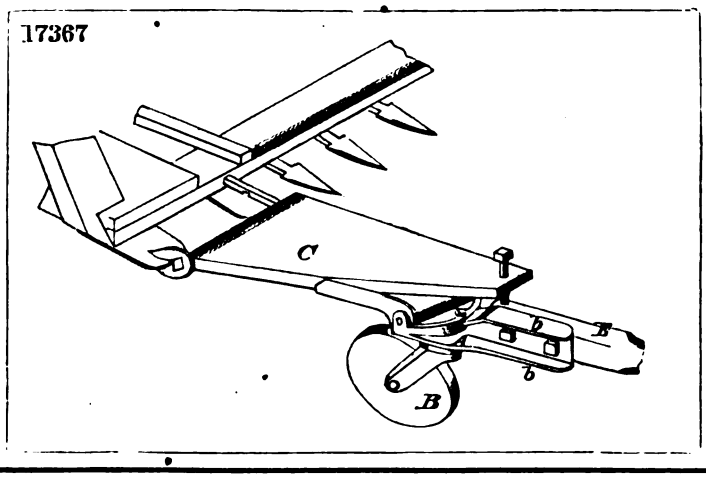

17045

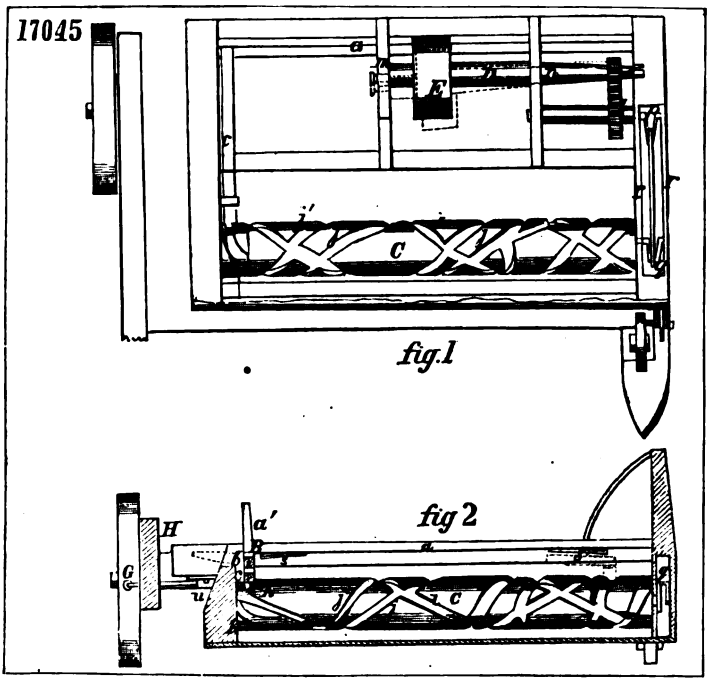

18093

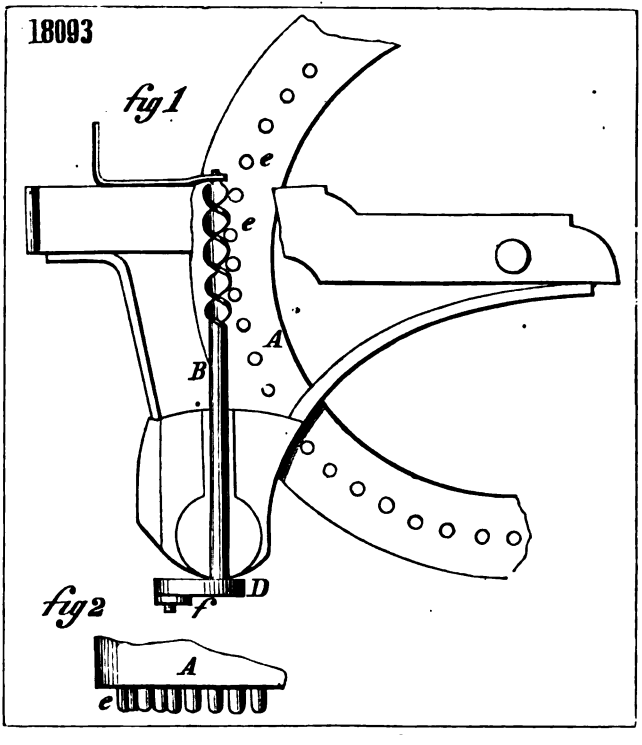

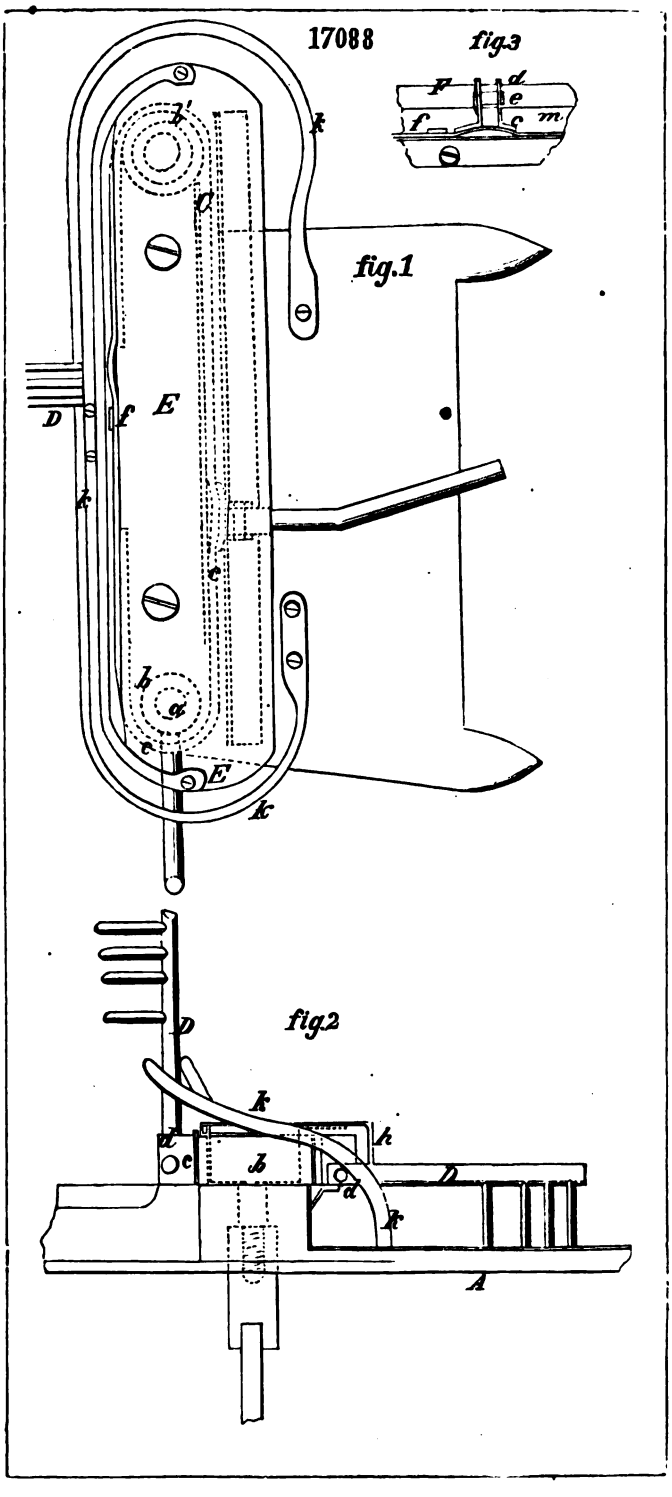
17088
fig.3
fig.1
fig.2
D
E
A

17451

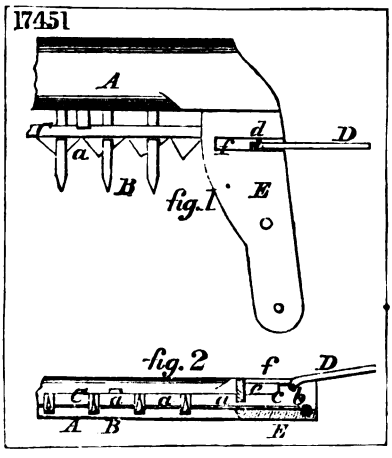

16968

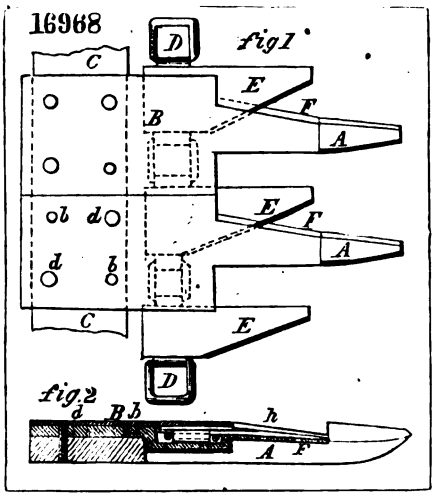

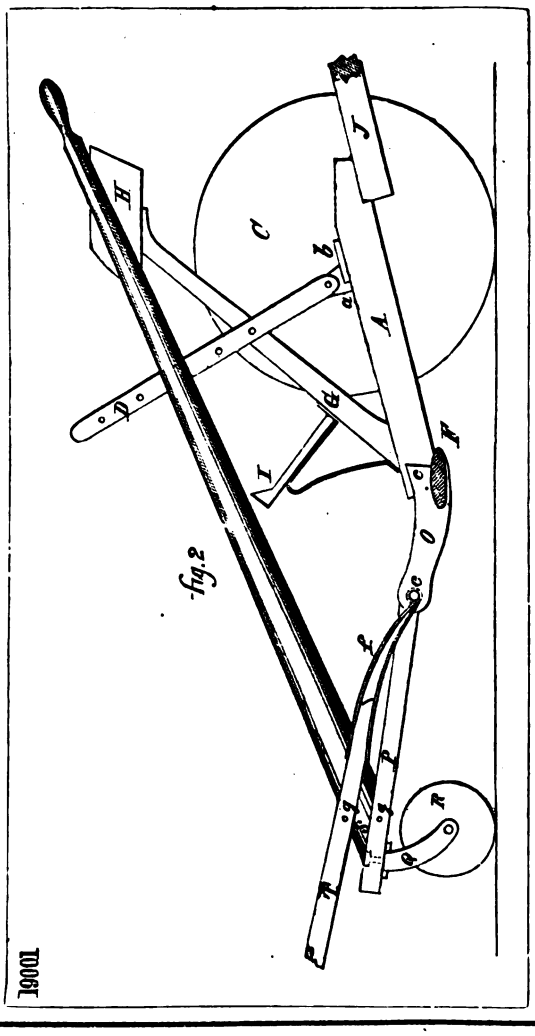

18173

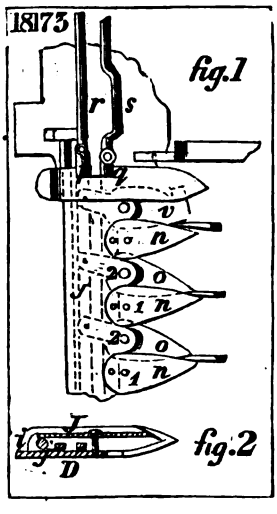

16442

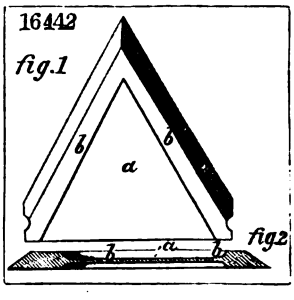

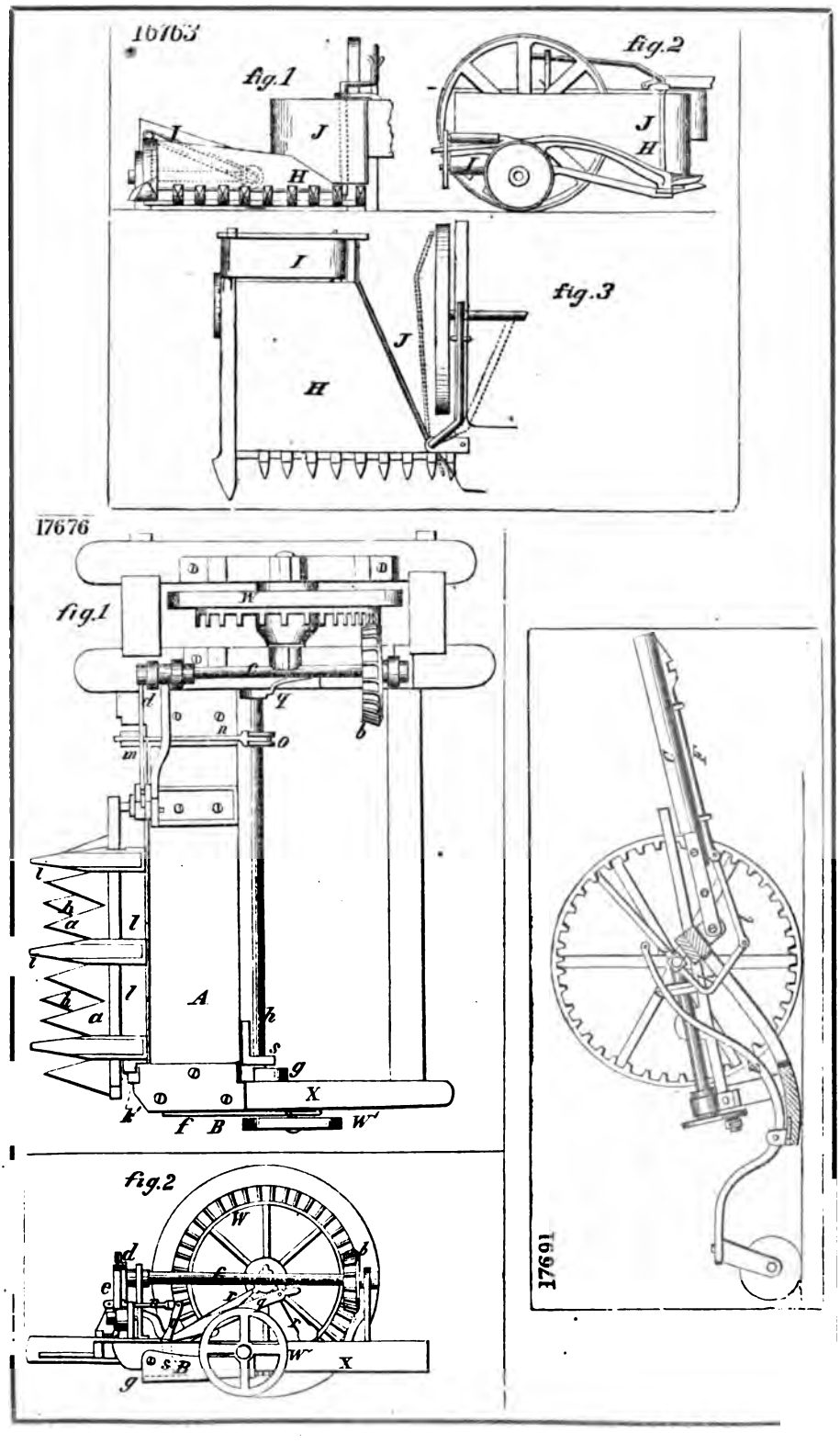
16763
fig.1
fig.2
fig.3
17676
fig.1
fig.2
17691

17685

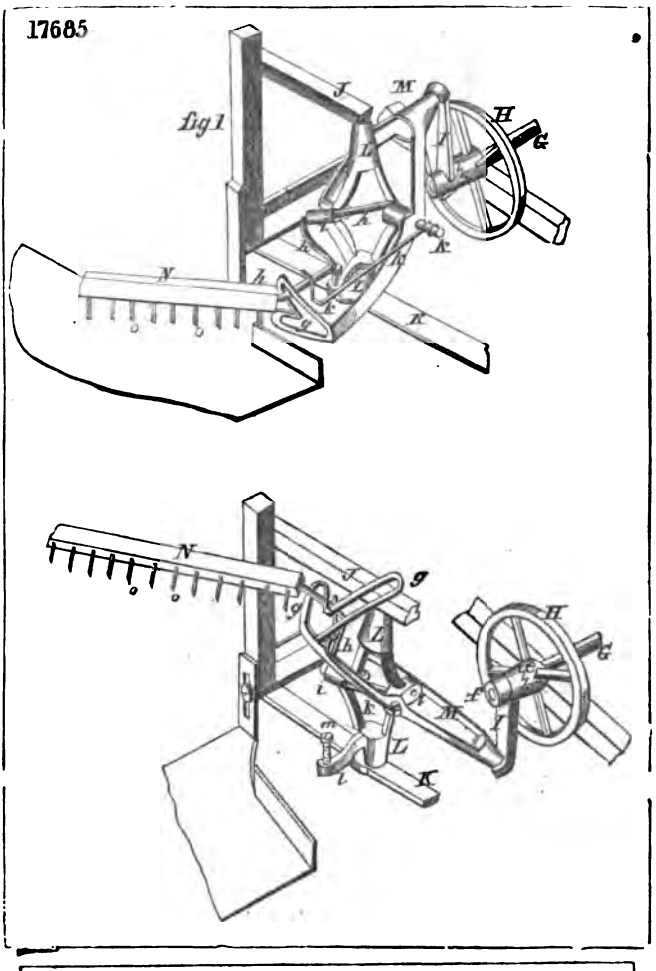

18686

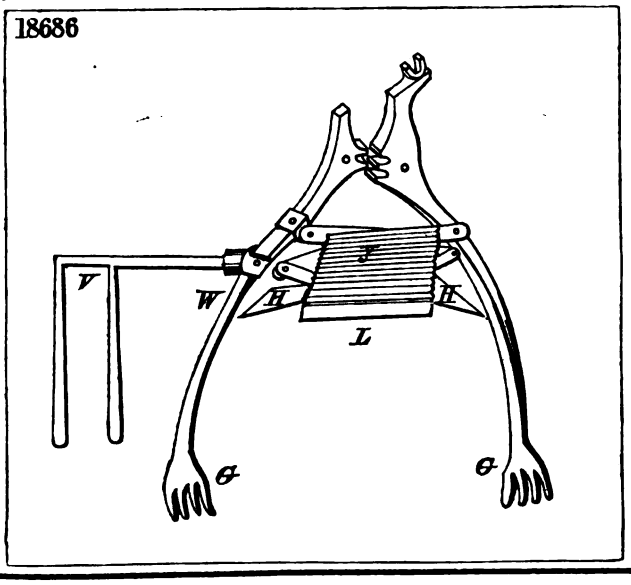

17832.

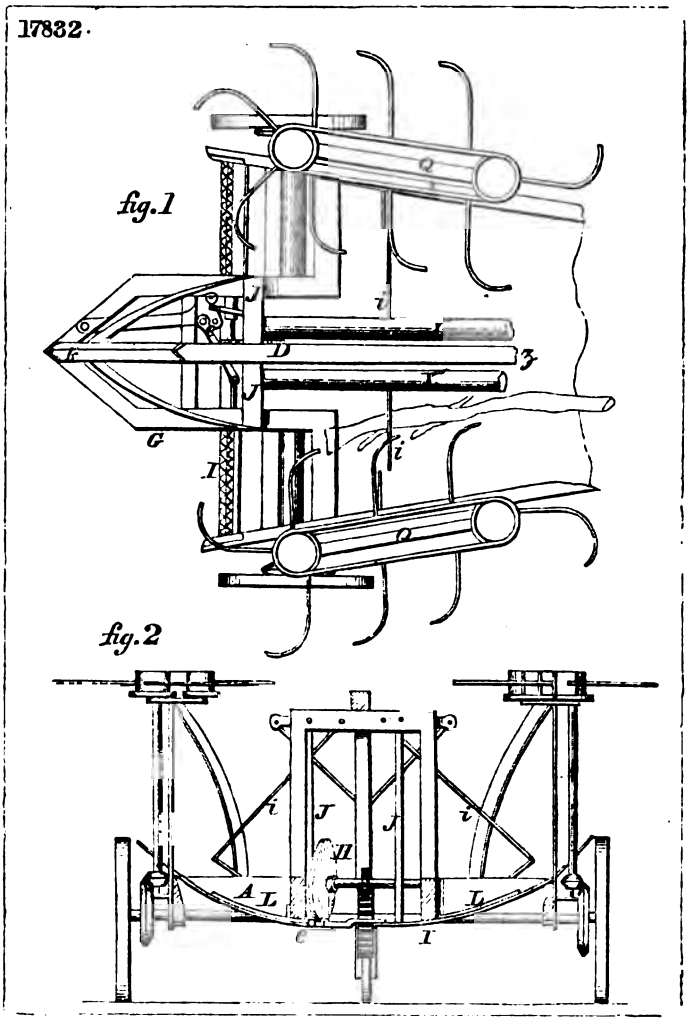

18697.

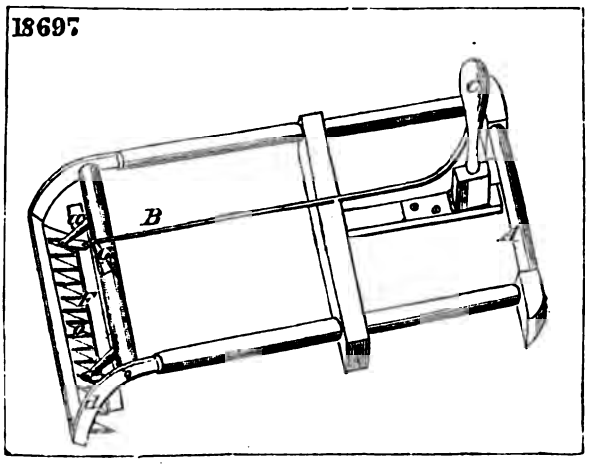

17328

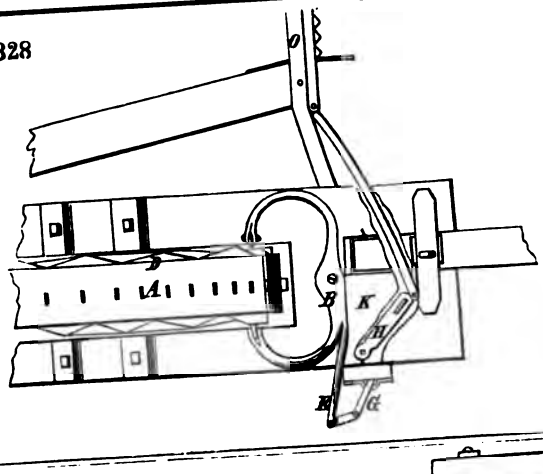

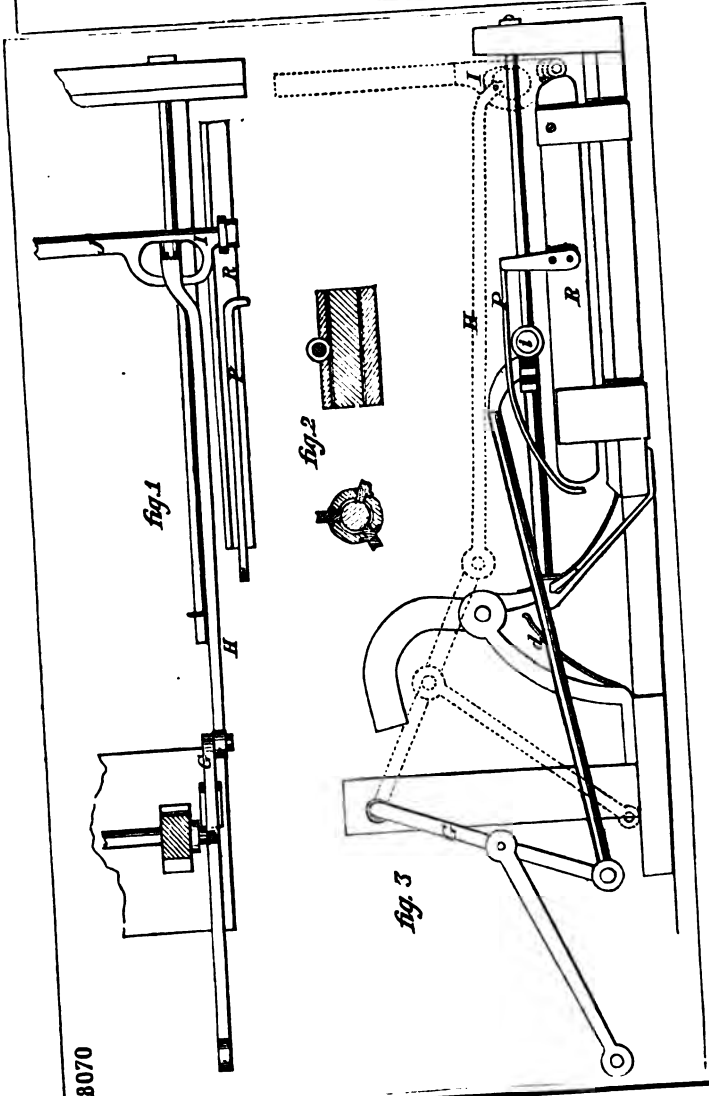

18070

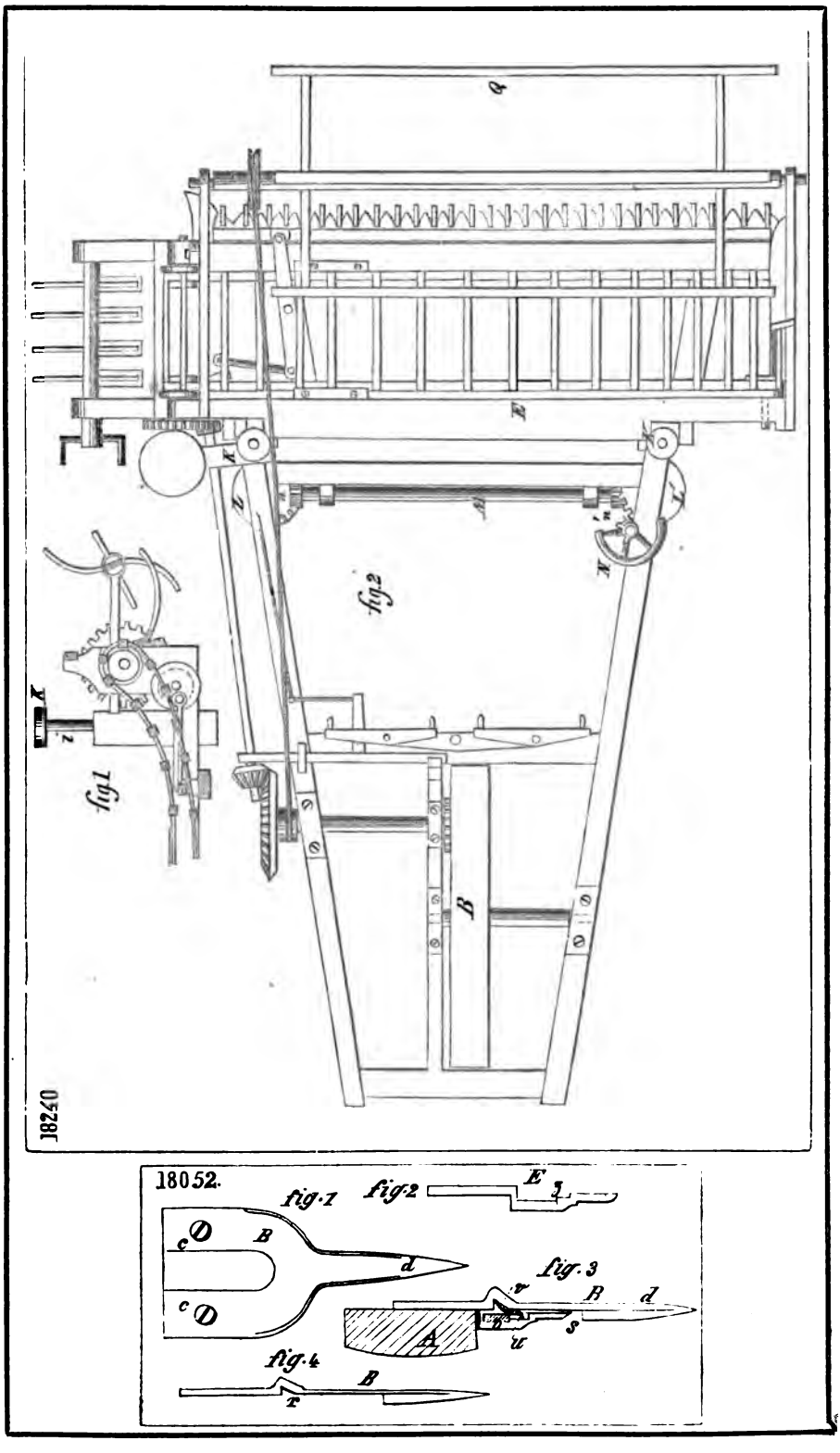
18240
fig.1
fig.2
18052.
fig.1
fig.2
fig.3
fig.4

17729

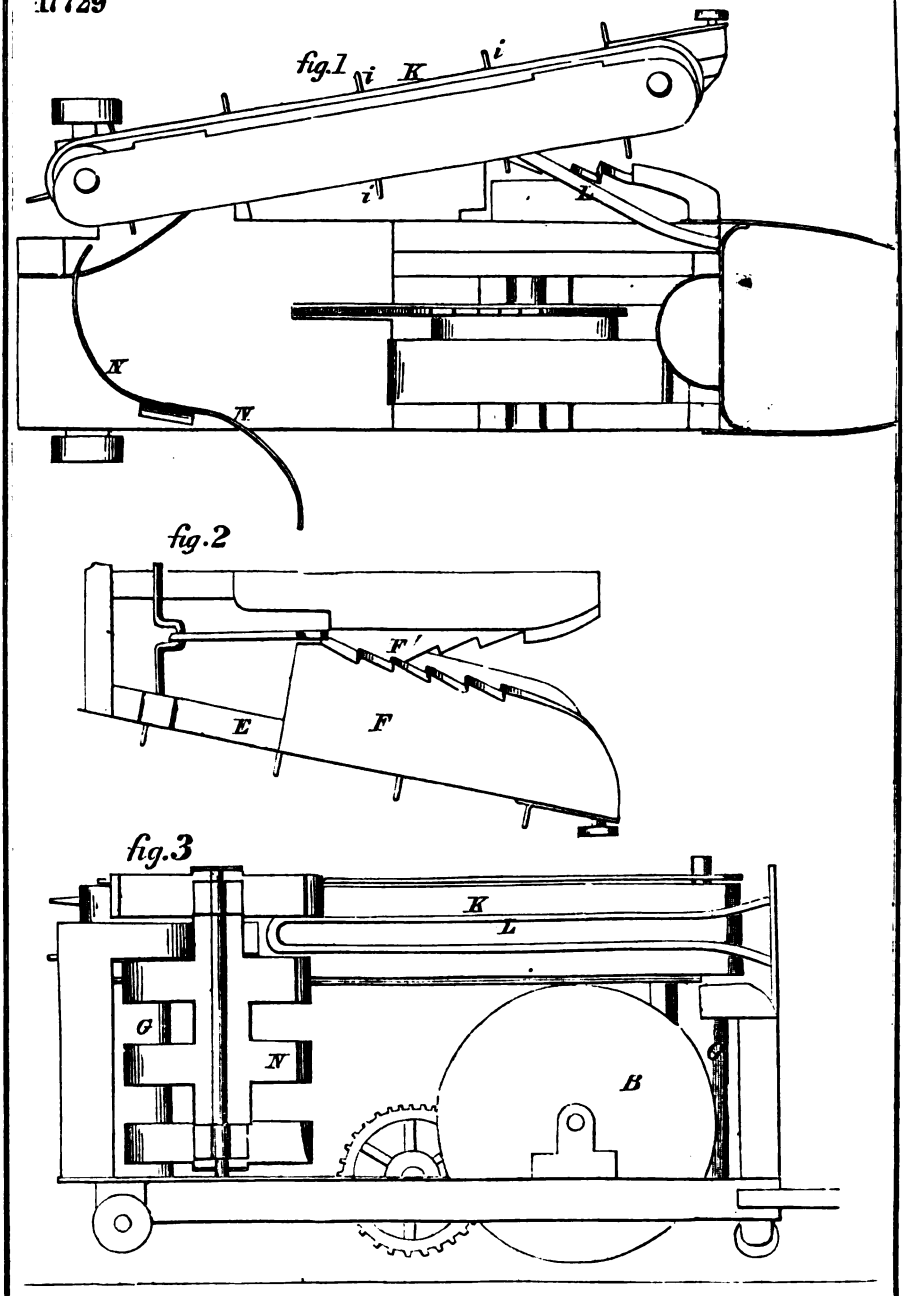

17703

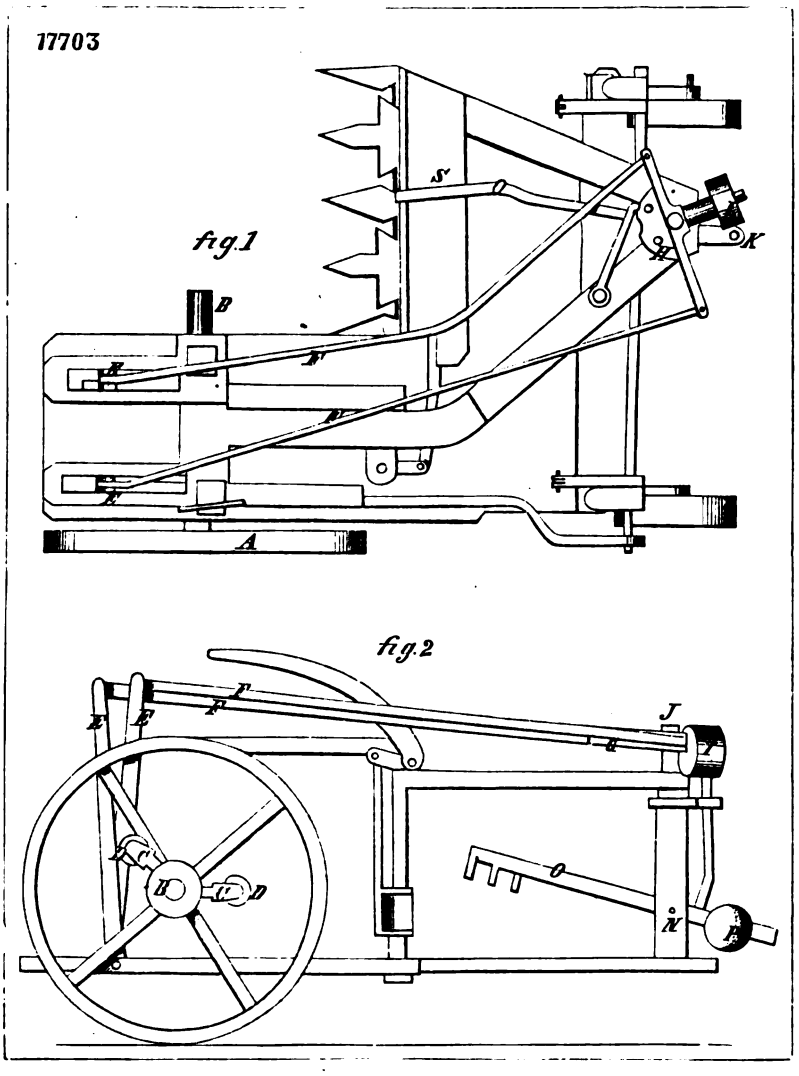

16441

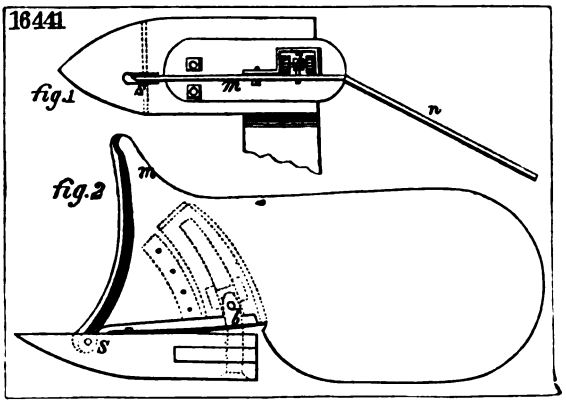

18628

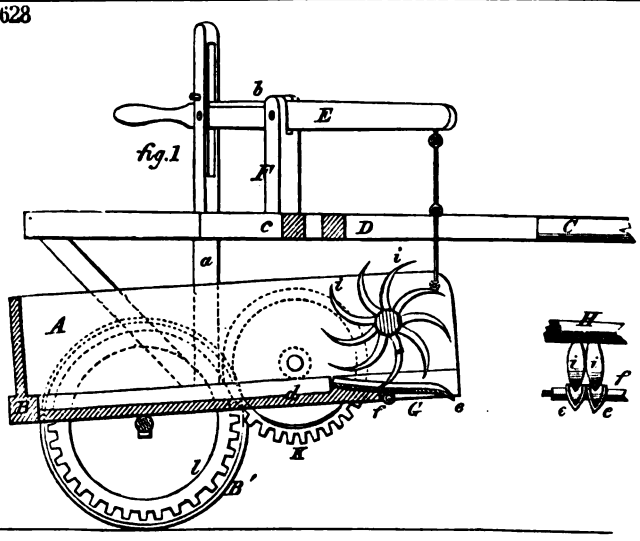

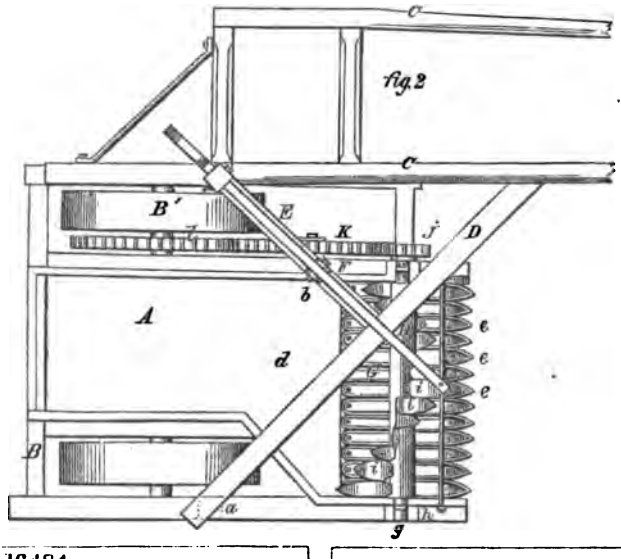

16484

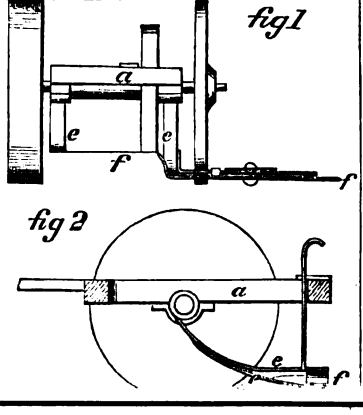

16393

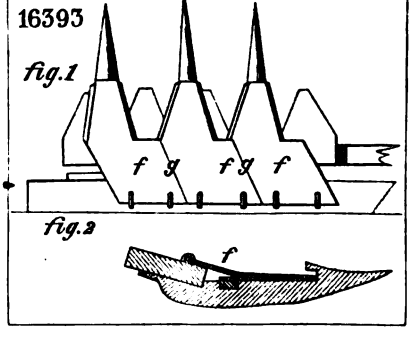

17779

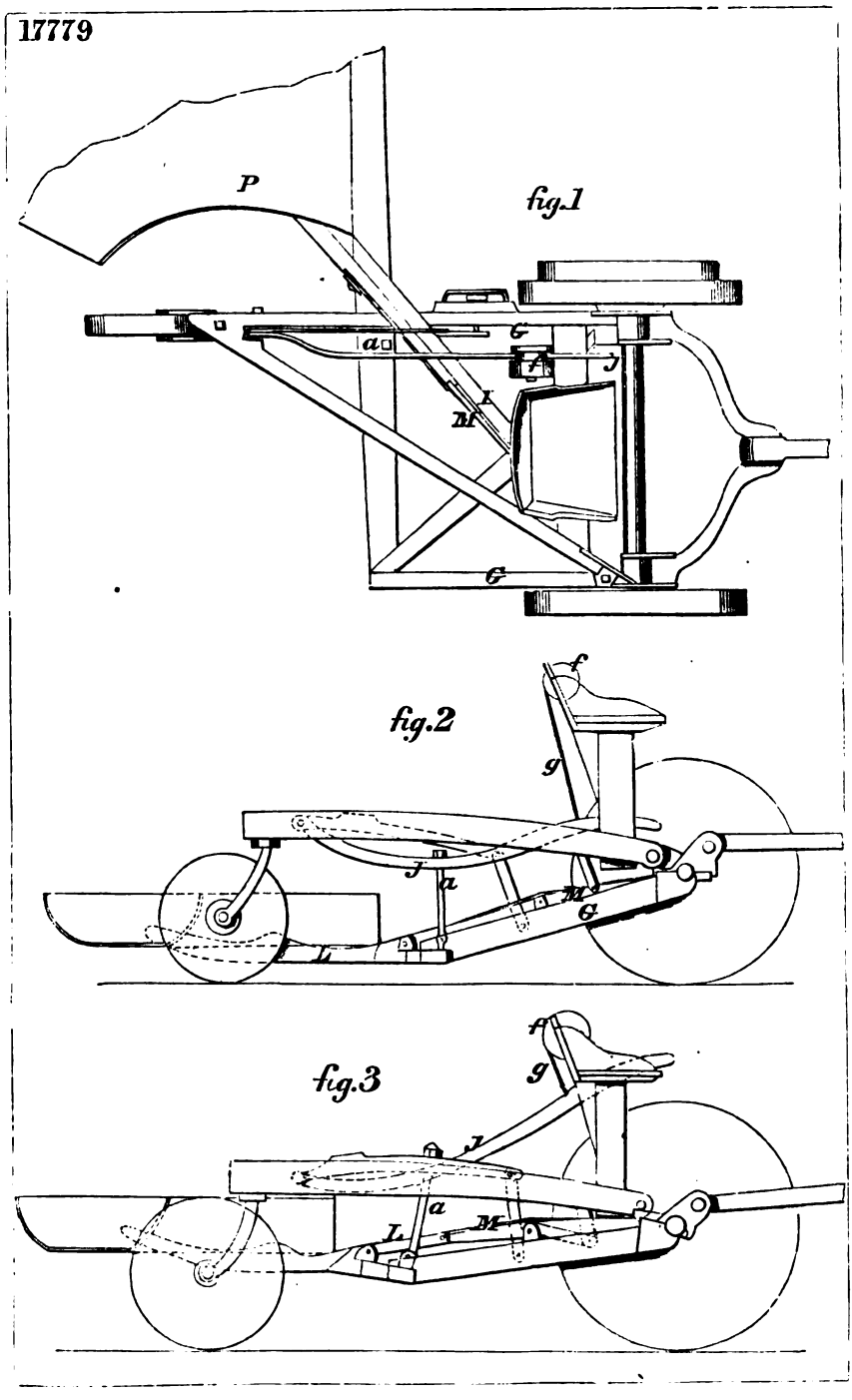

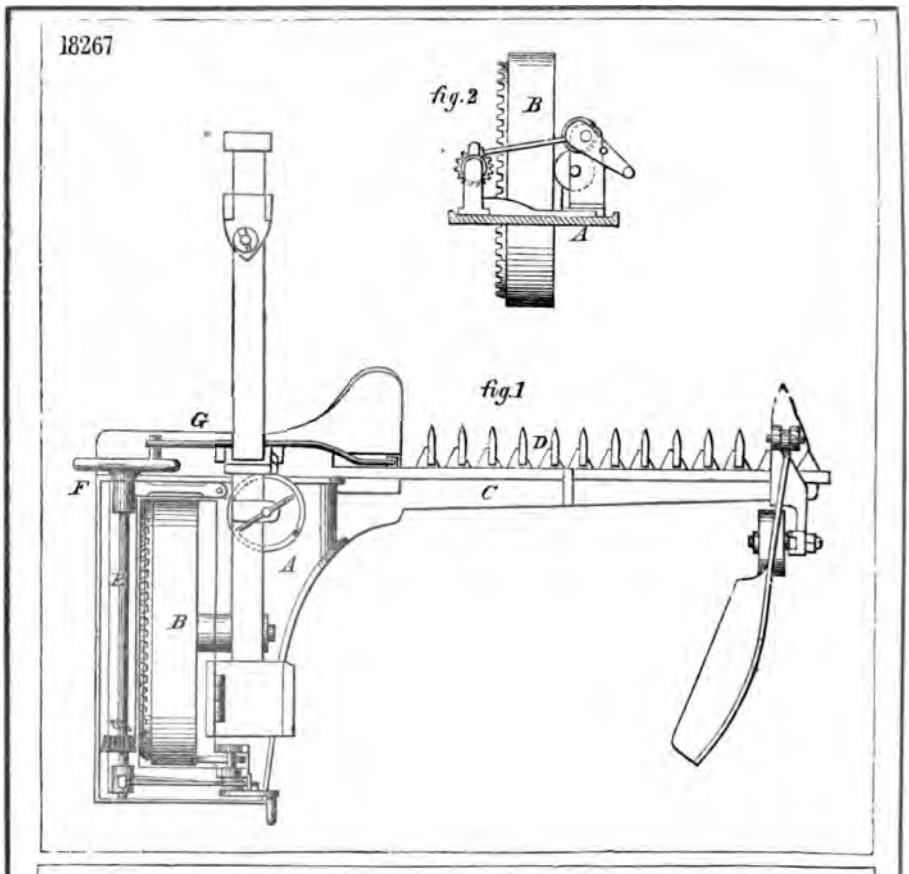
18267
fig.2
B
A
fig.1
G
D
F
C
A
E
B

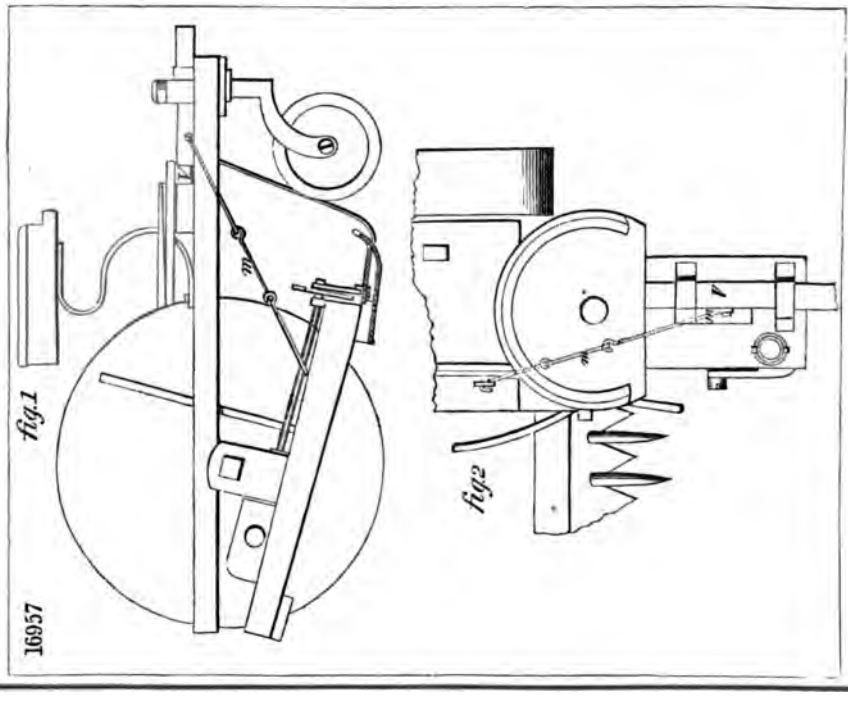
fig.1
16957
fig.2

17927

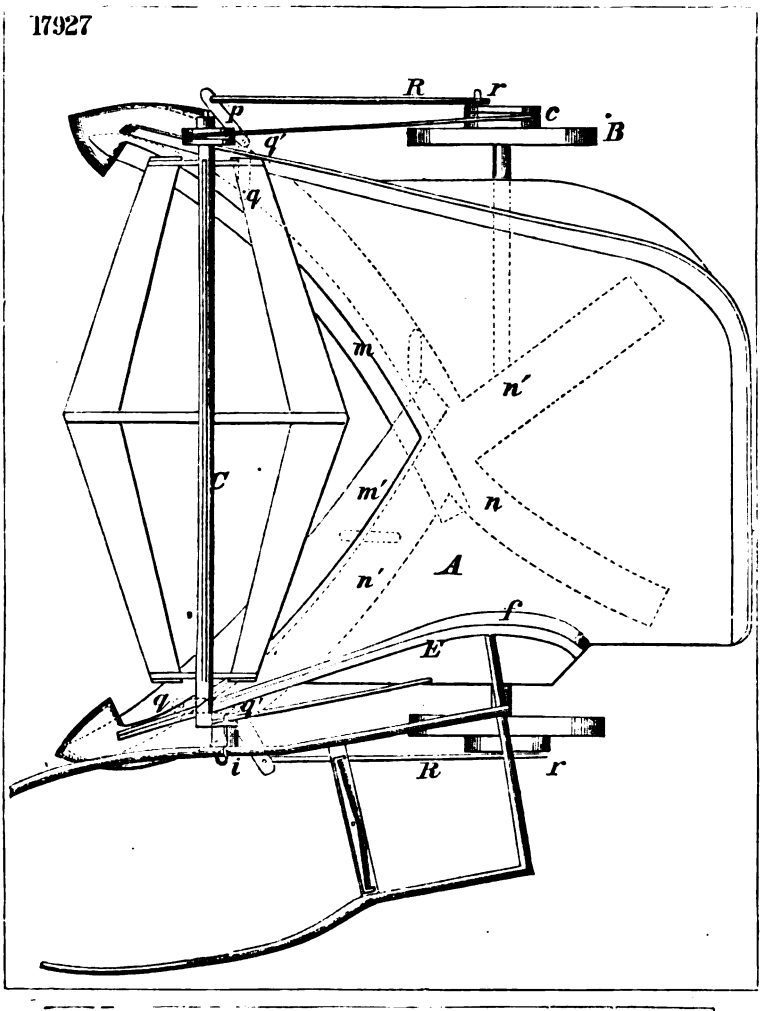

17277

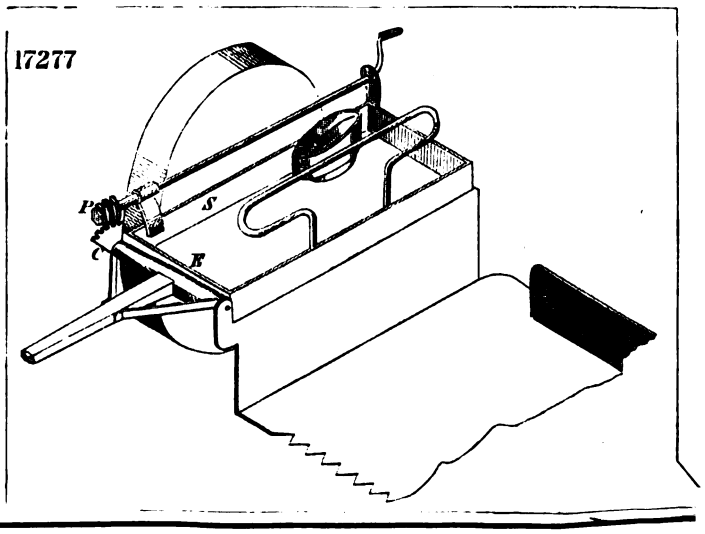

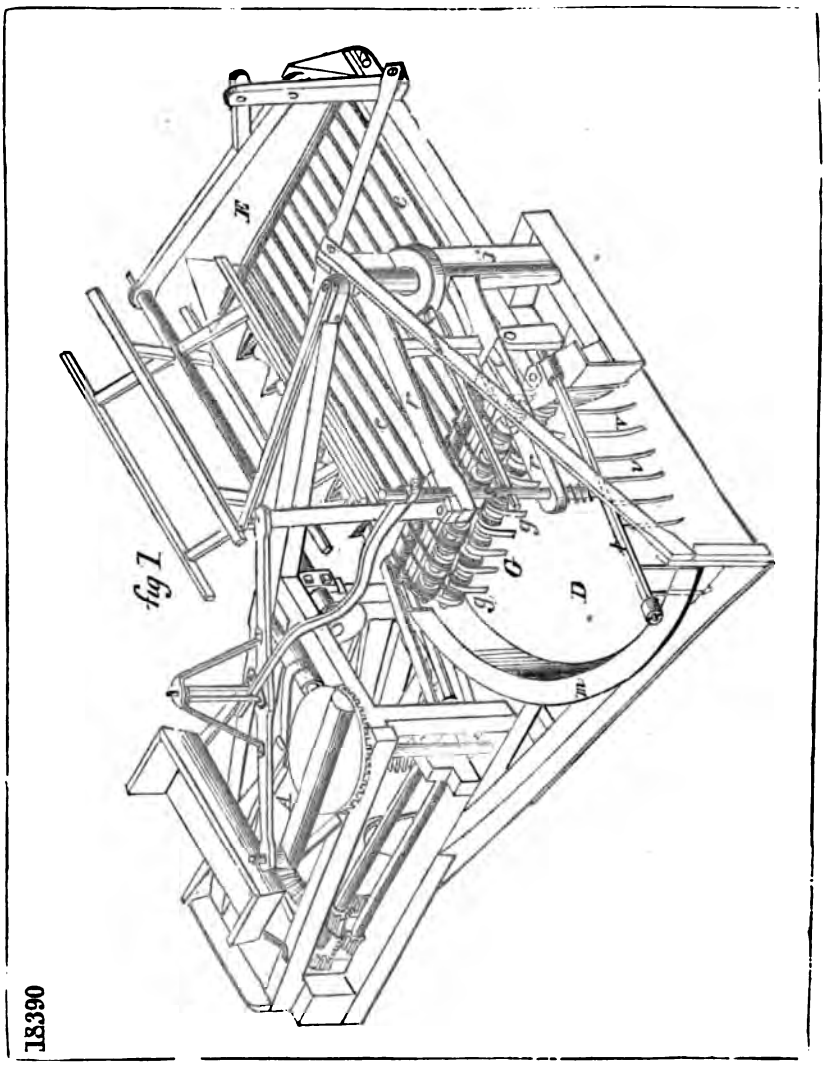
18390
fig 1

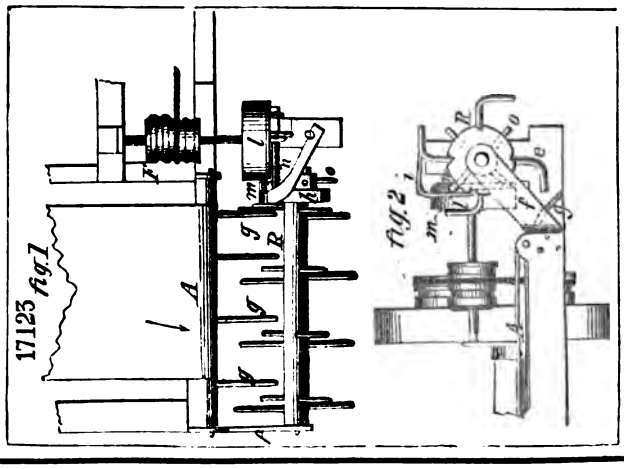
17123
fig. 1
fig. 2

18405

fig 1

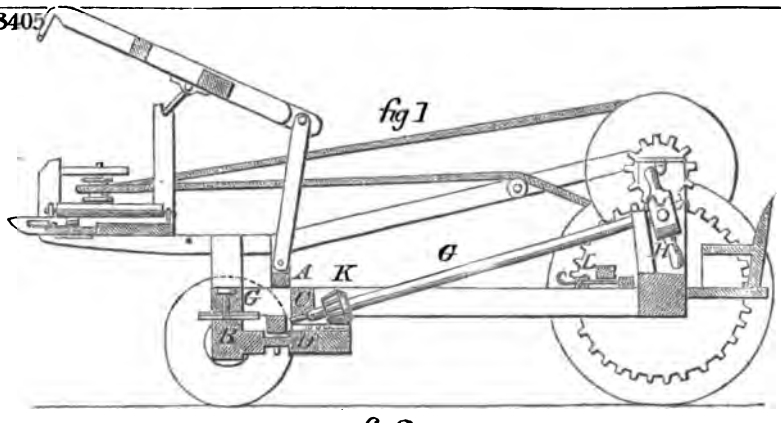

fig 2

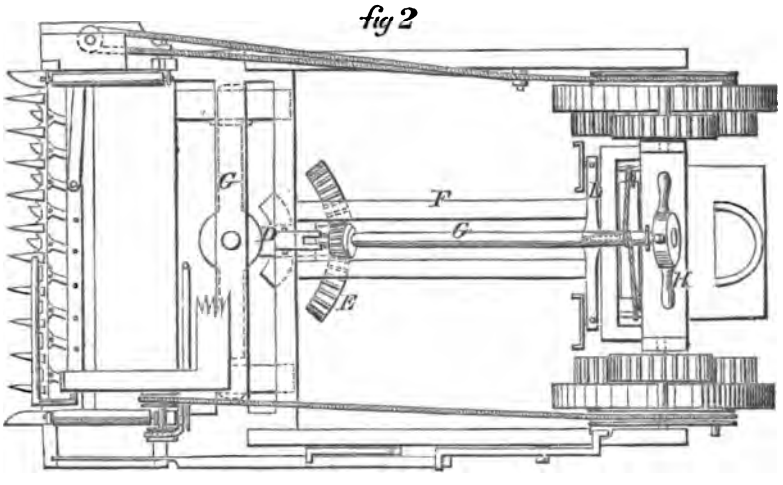

18390

fig 2

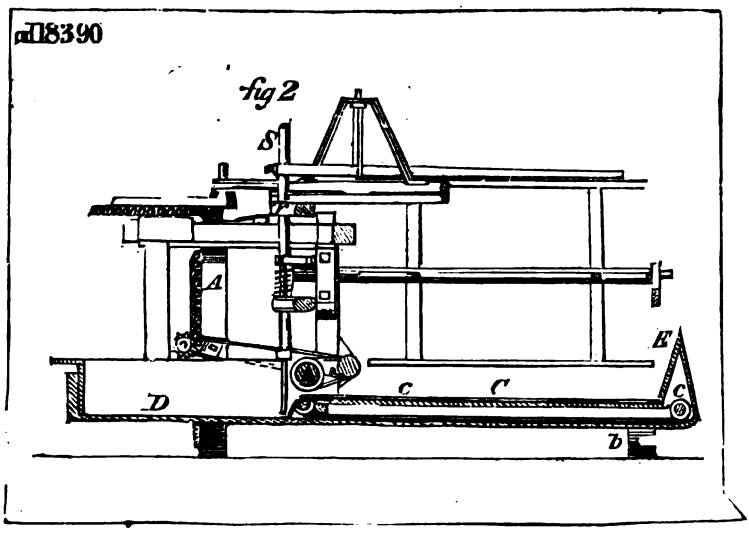

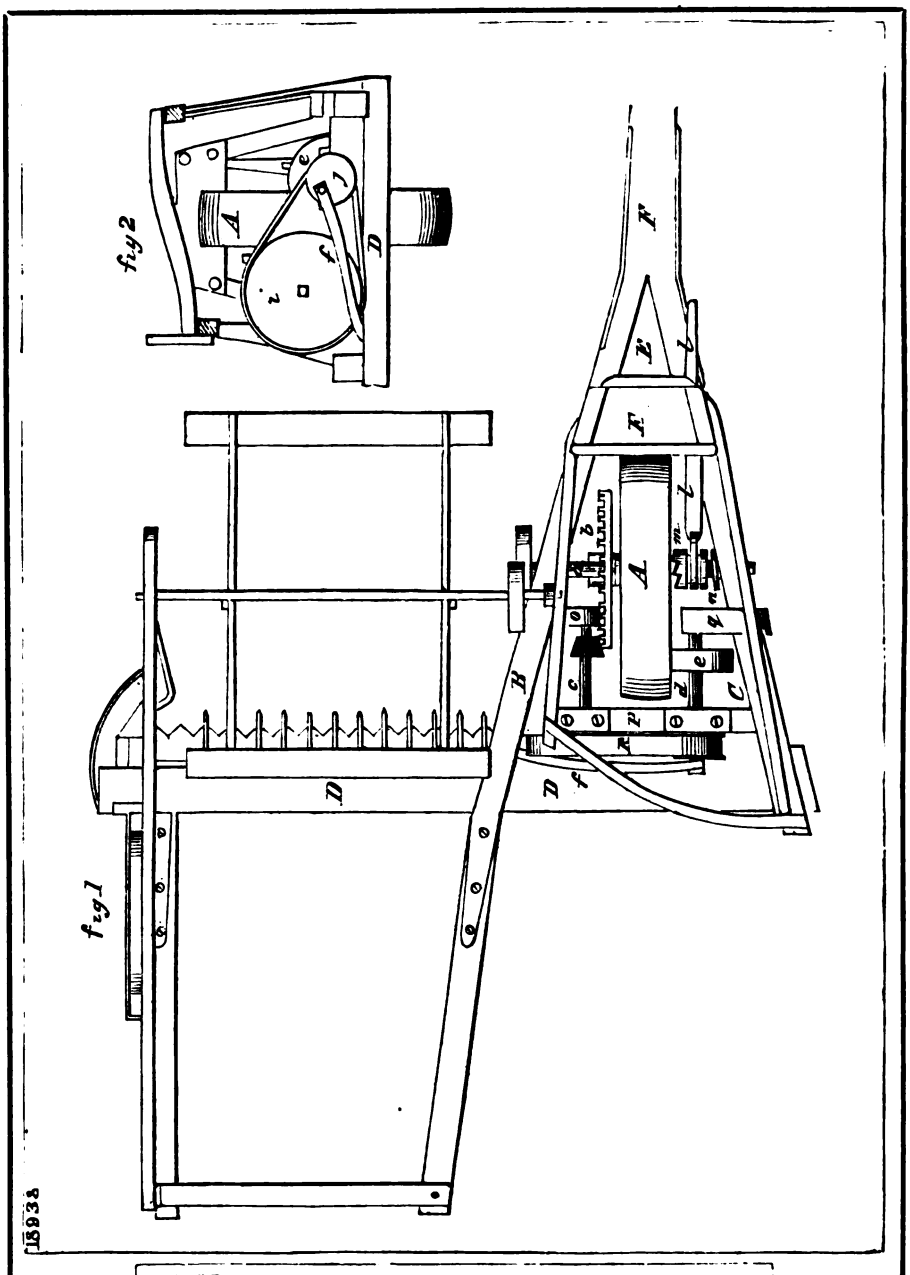
fig 2
fig 1
15938

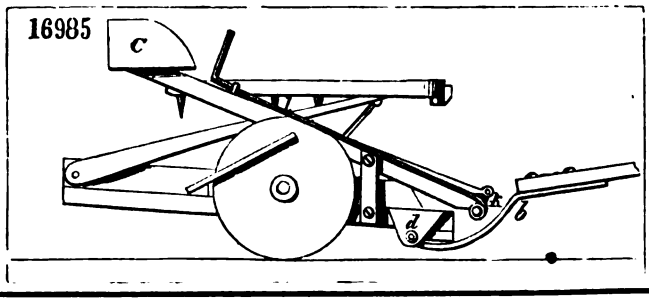
16985

18562

fig.1

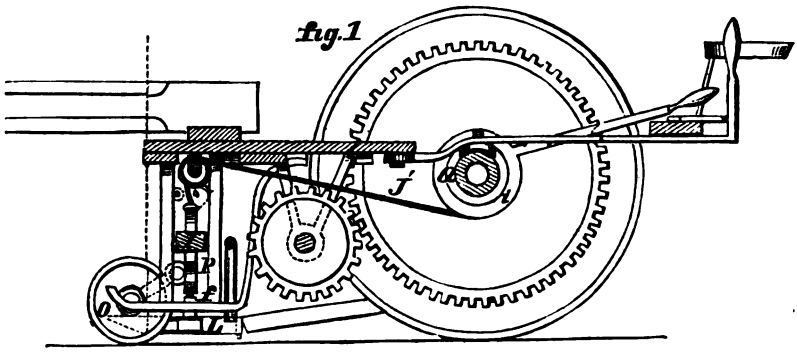

ad 18562

fig 2

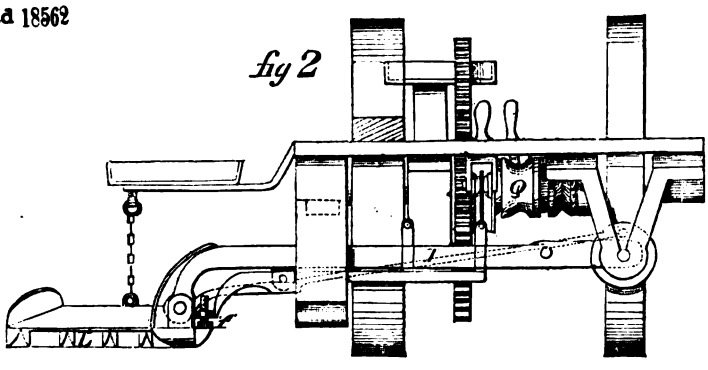

17157

fig.1

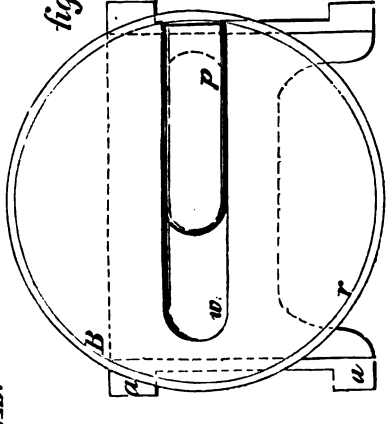

fig.2

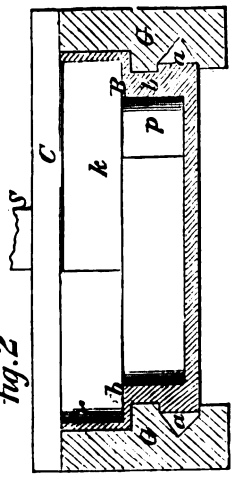

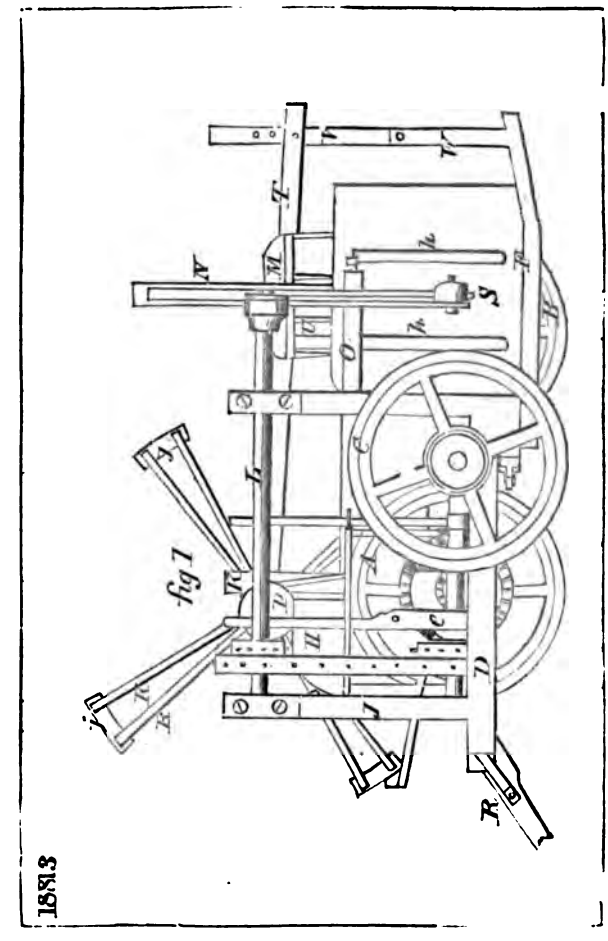
1881.3
fig 1

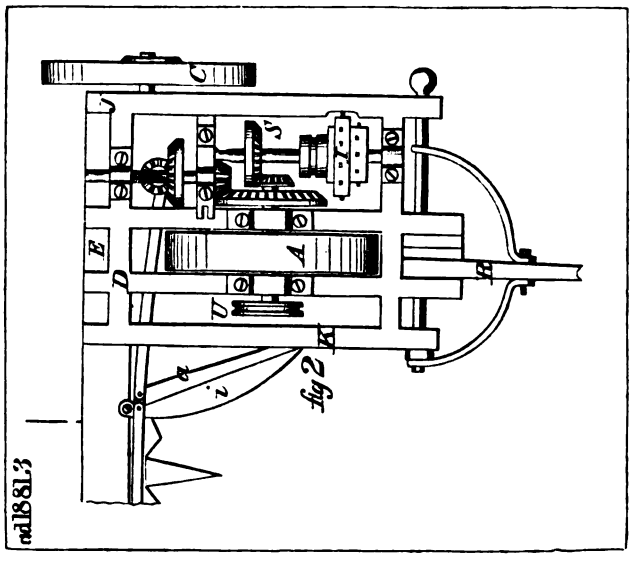
ad 1881.3
fig 2

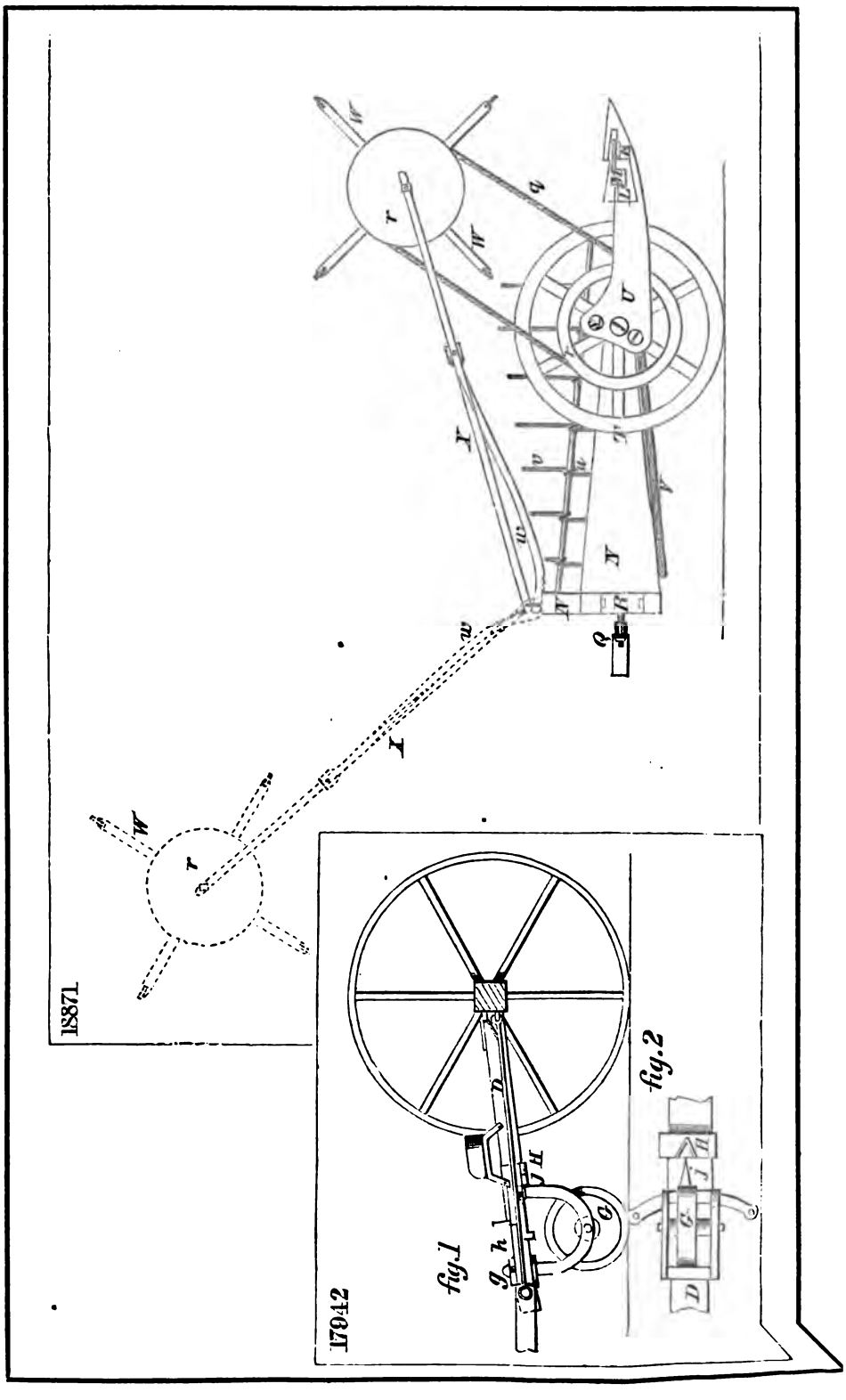
18871
17042
fig.1
fig.2

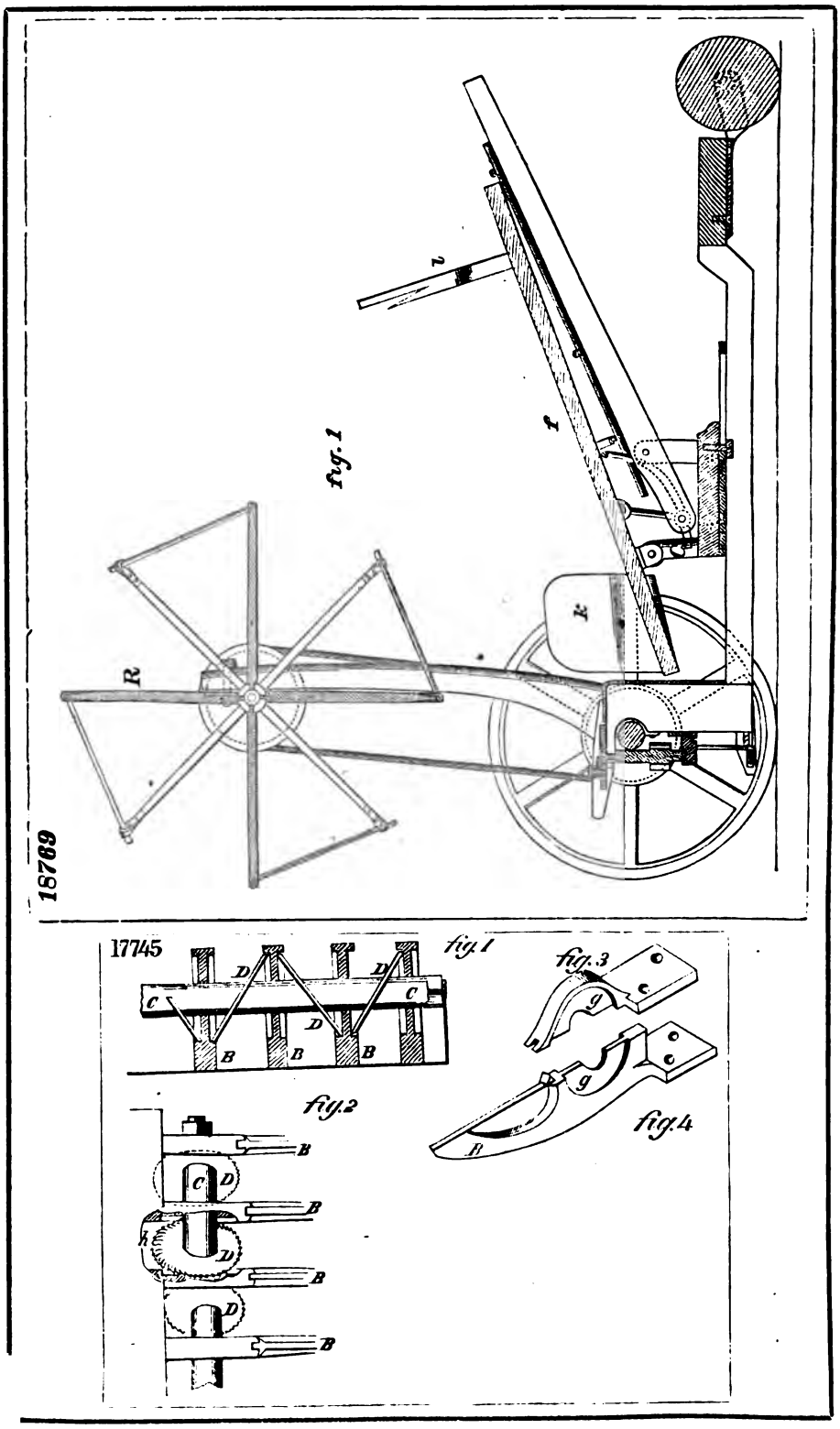
18769
fig. 1
R
K
f
r
17745
fig. 1
fig. 2
fig. 3
fig. 4
B
C
D
g
h

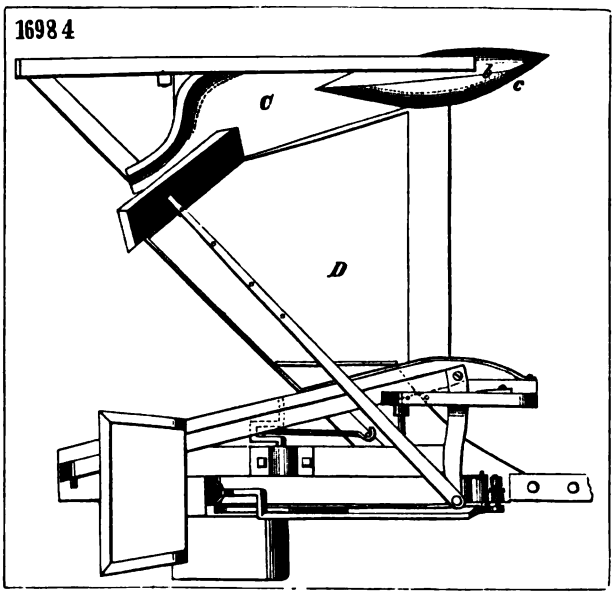
16984
C
c
D

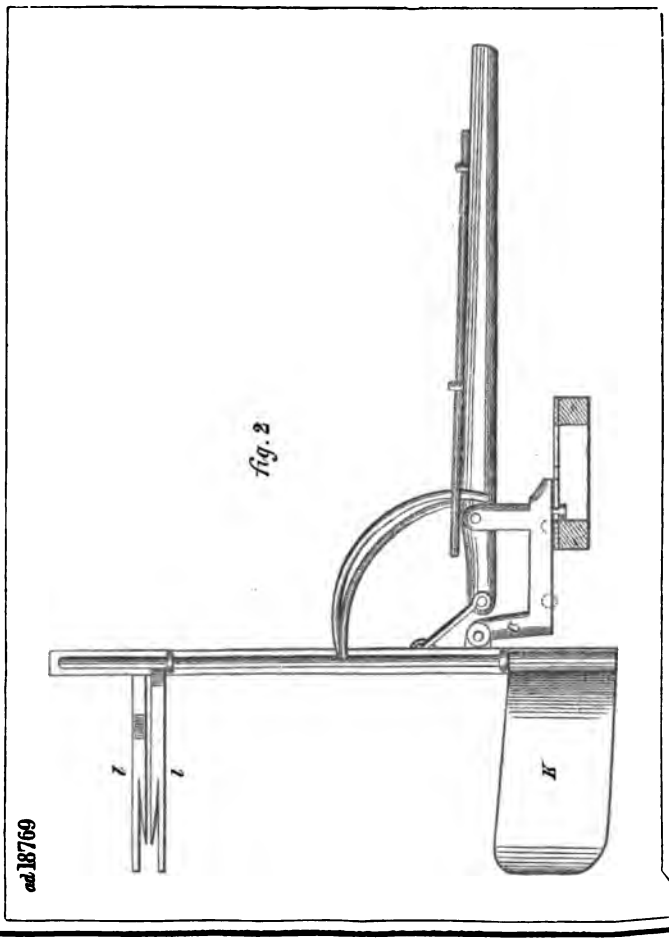
fig. 2
l
l
K
ad 18769

18437

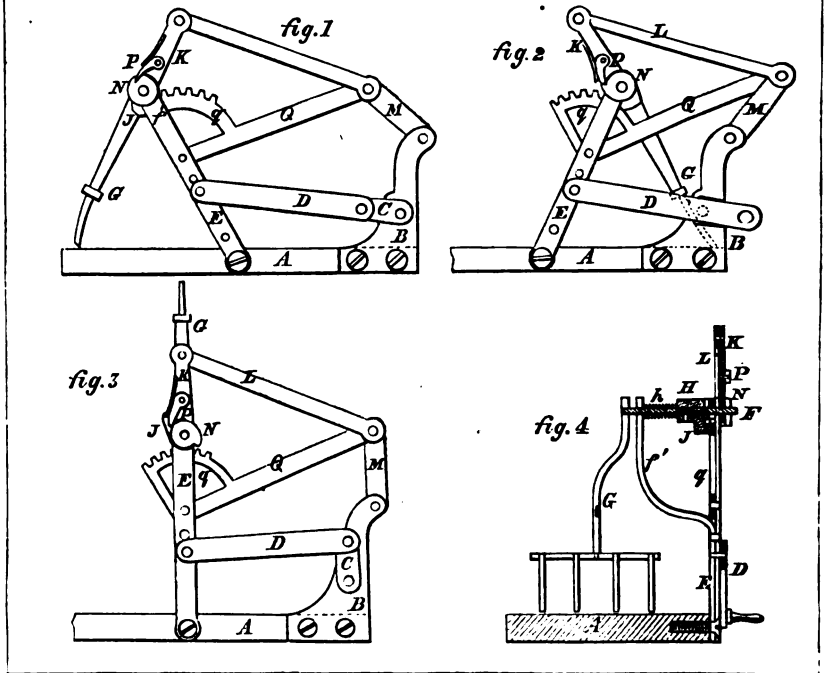

18659

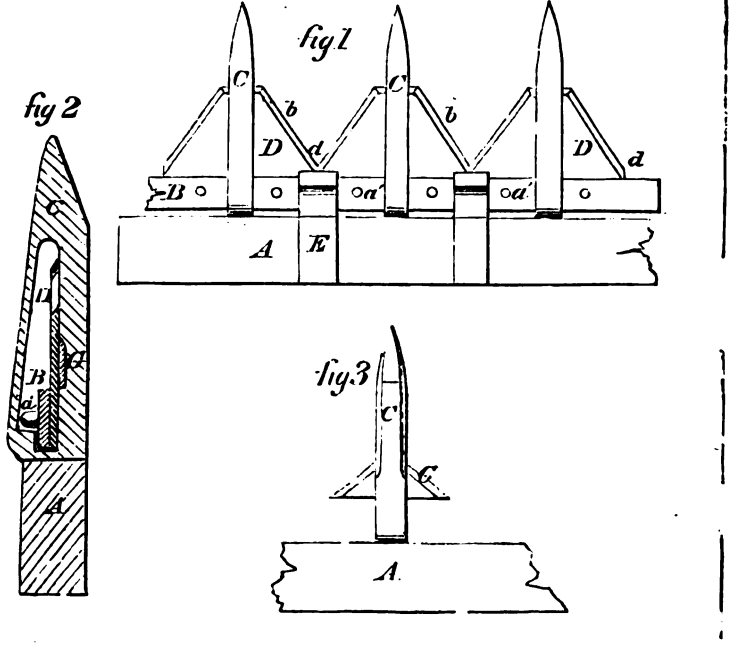

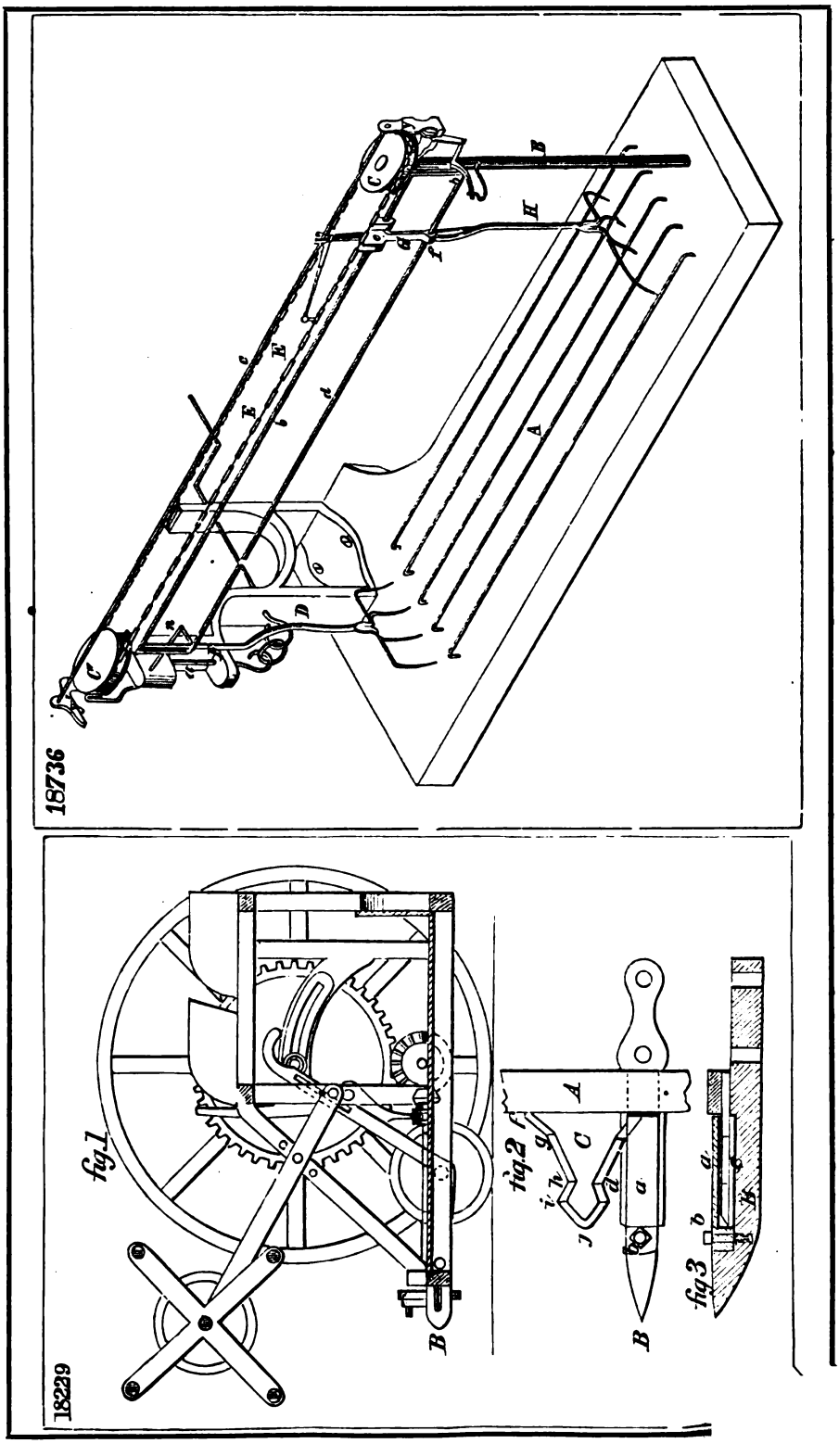
18736
18229
fig 1
fig 2
fig 3

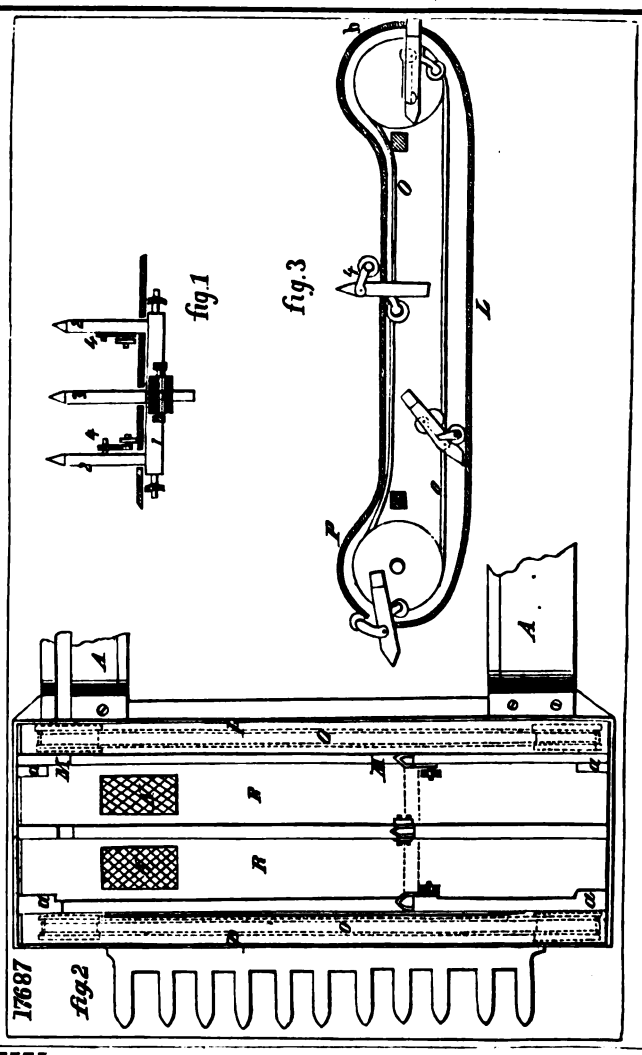
17687
fig.1
fig.2
fig.3
A
A
N
N
S
S
Z
Z
O
O

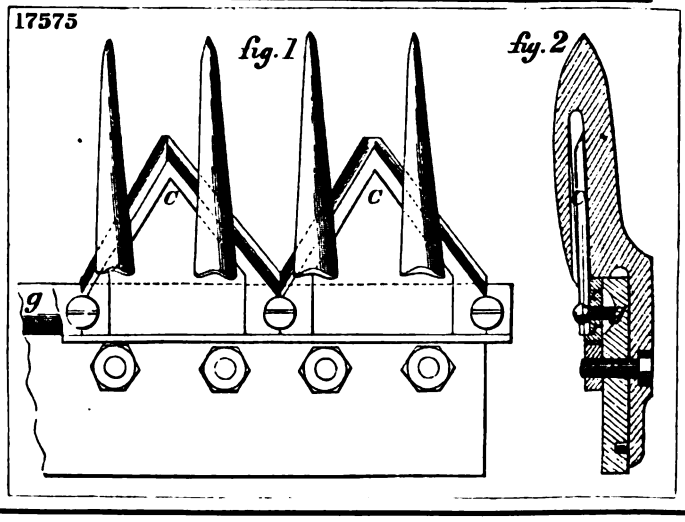
17575
fig.1
fig.2
C
C
g

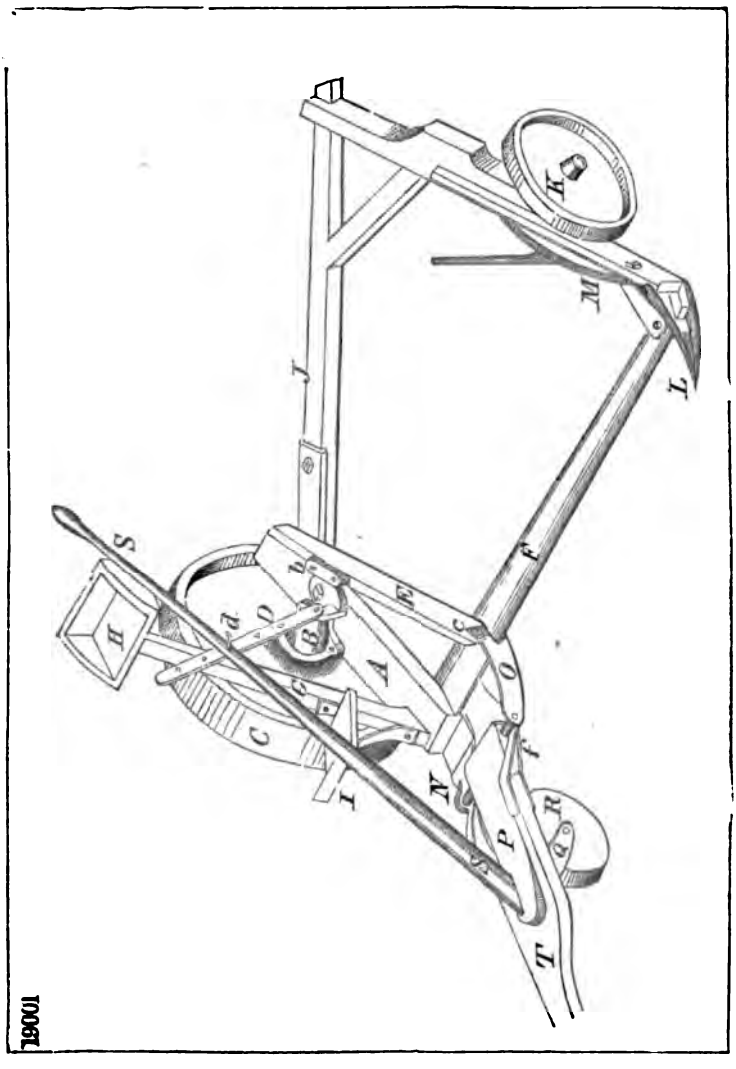
19001
S
H
J
K
M
L
F
E
b
d
D
B
A
C
e
I
N
O
f
P
R
T

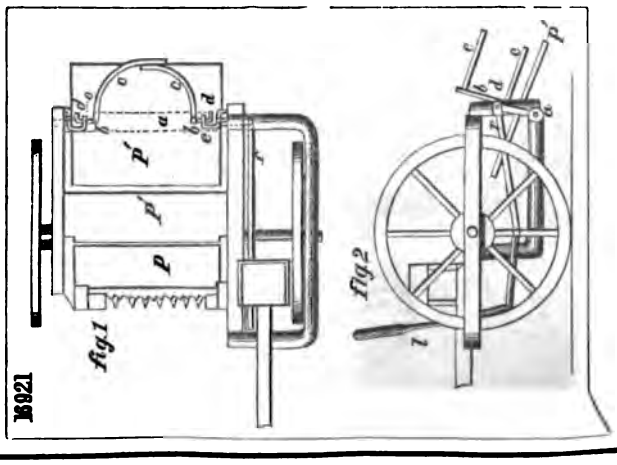
19921
fig.1
fig.2
p
p'
p'
a
b
c
d
e
f
l

16836

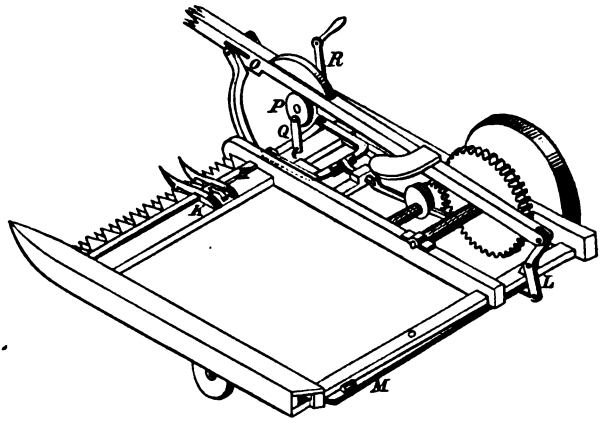

16747

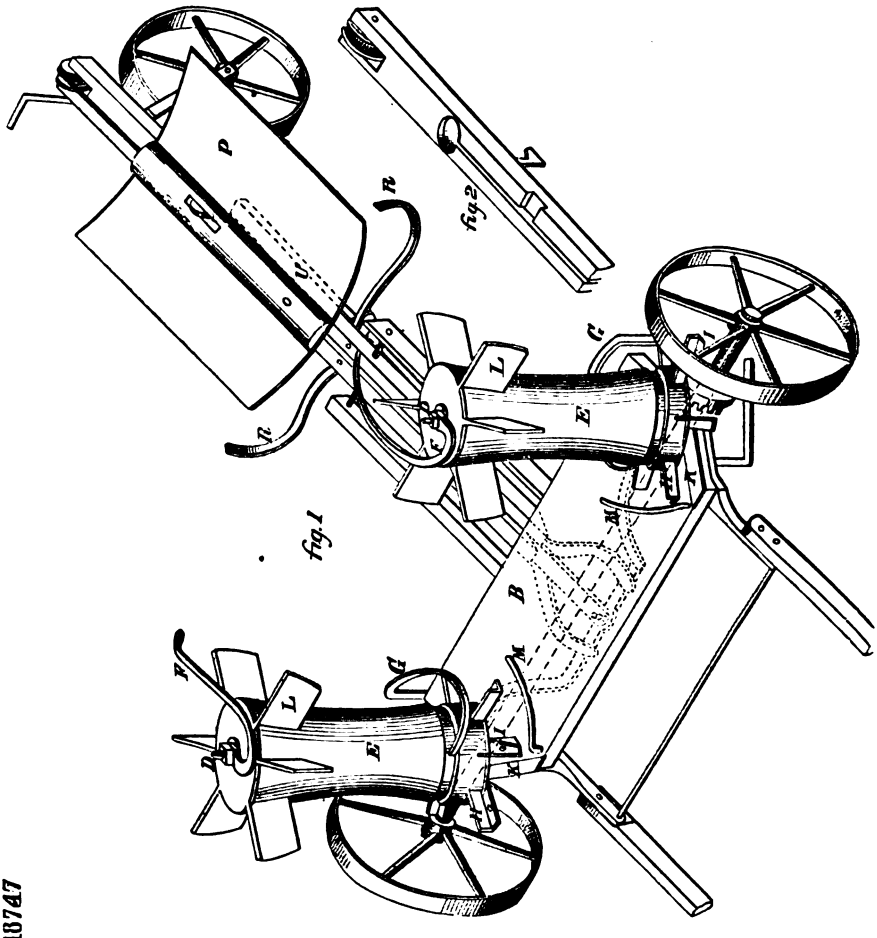

17438

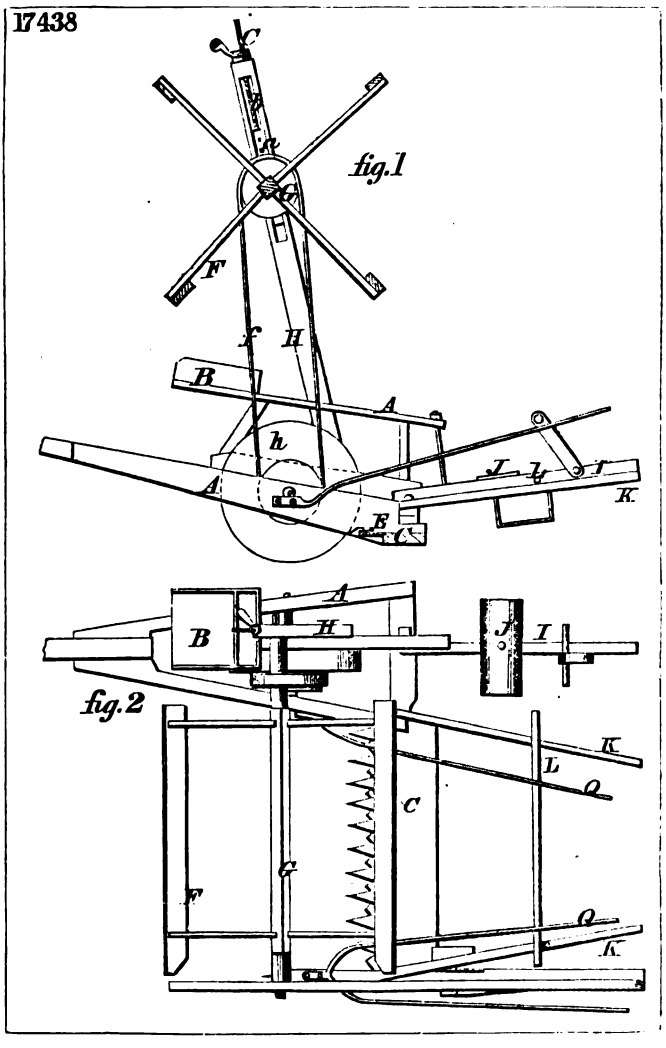

16873

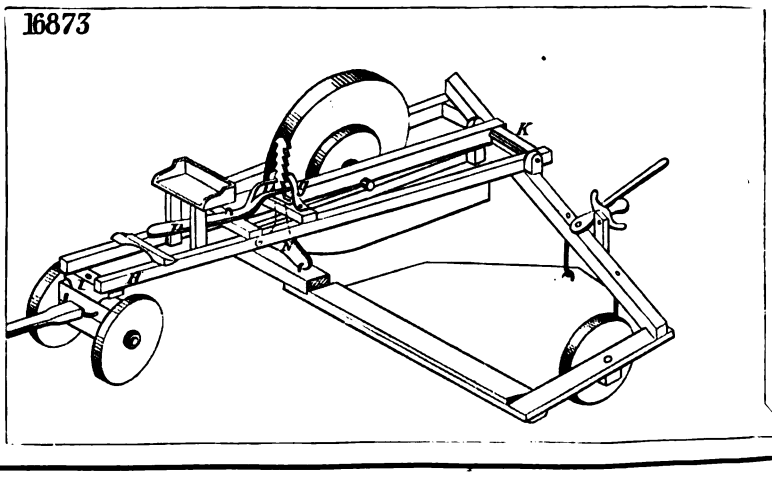

18981

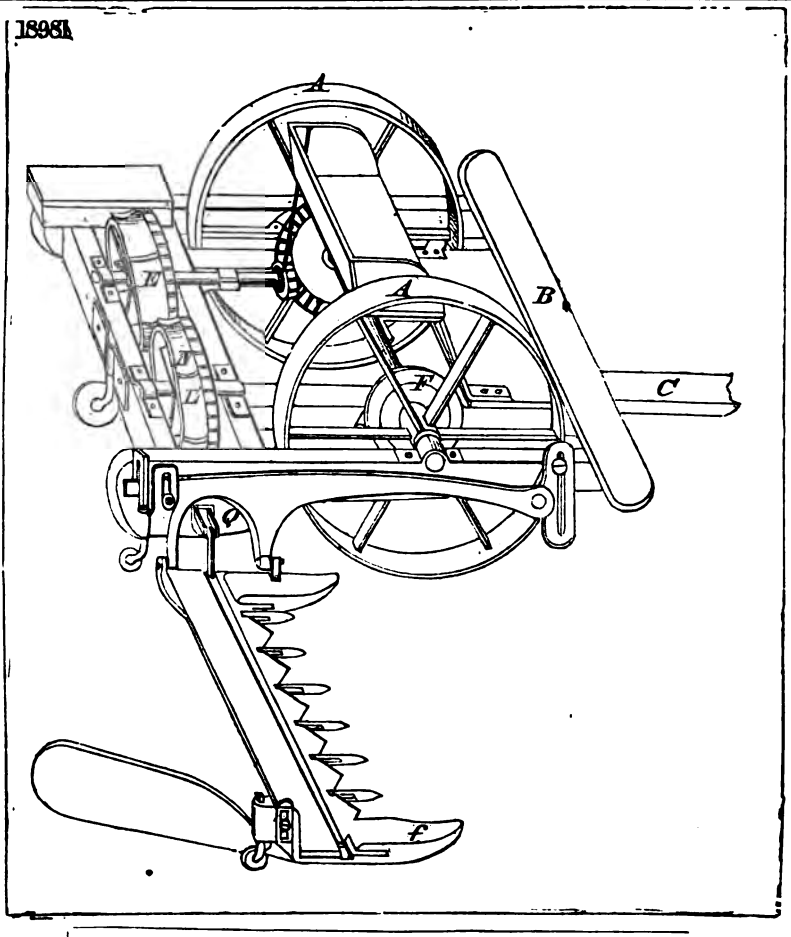

16619

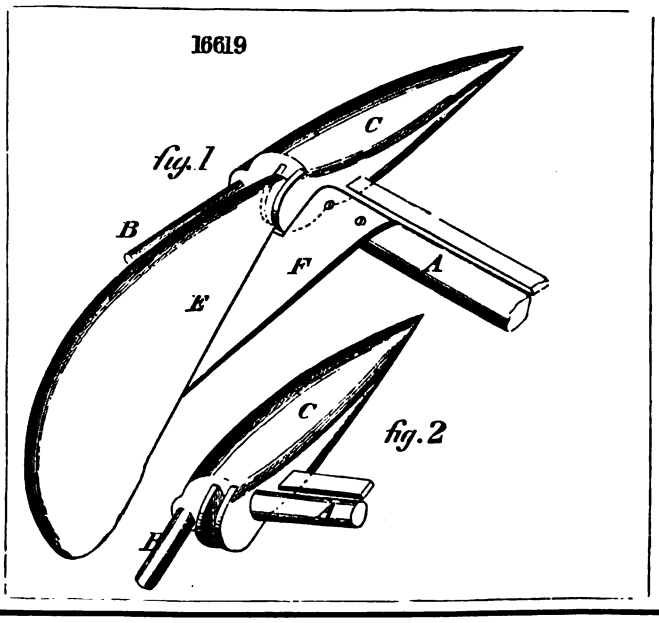

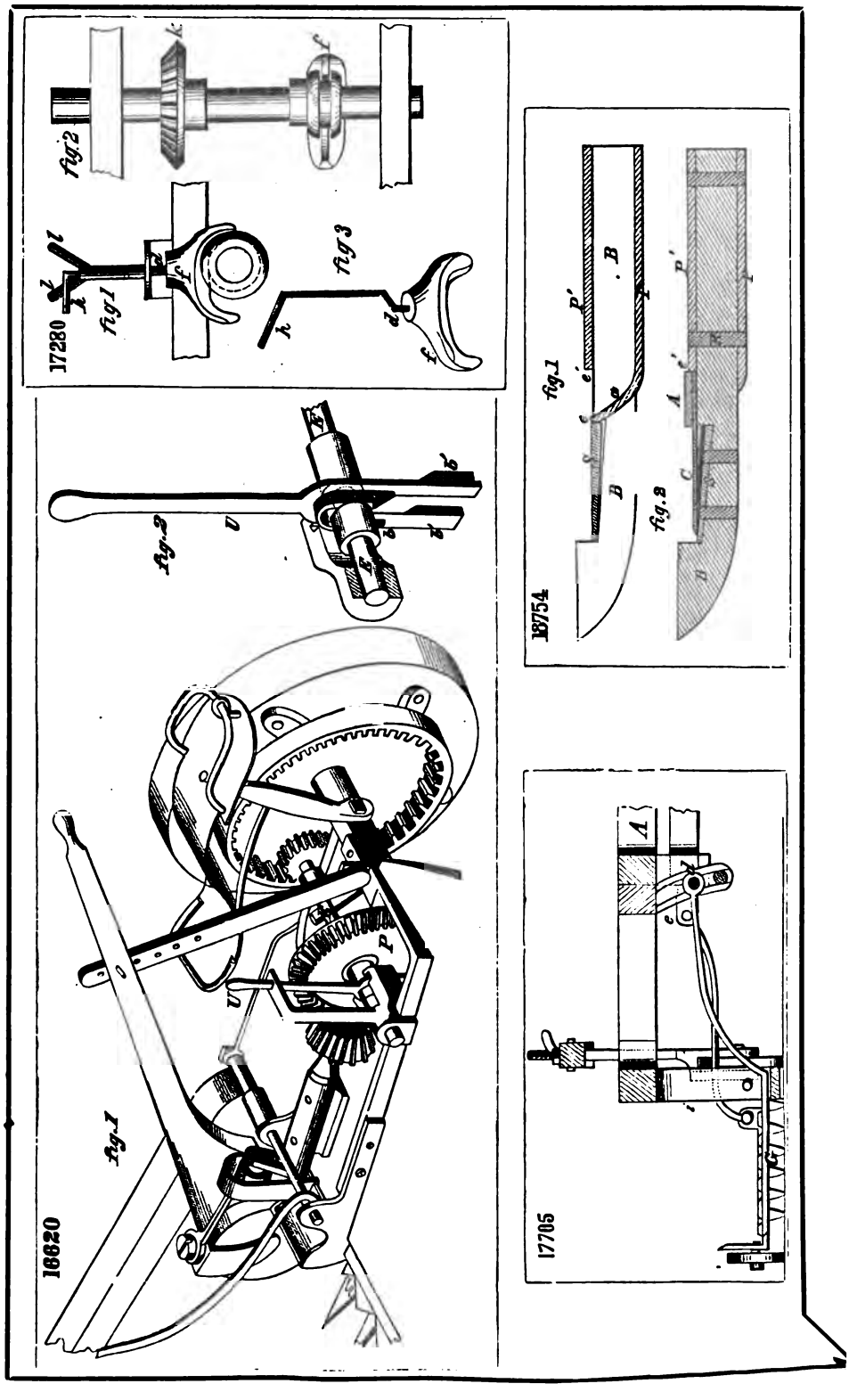
16620
fig.1
fig.2
17280
fig.1
fig.2
fig.3
18754
fig.1
fig.2
17705

18256

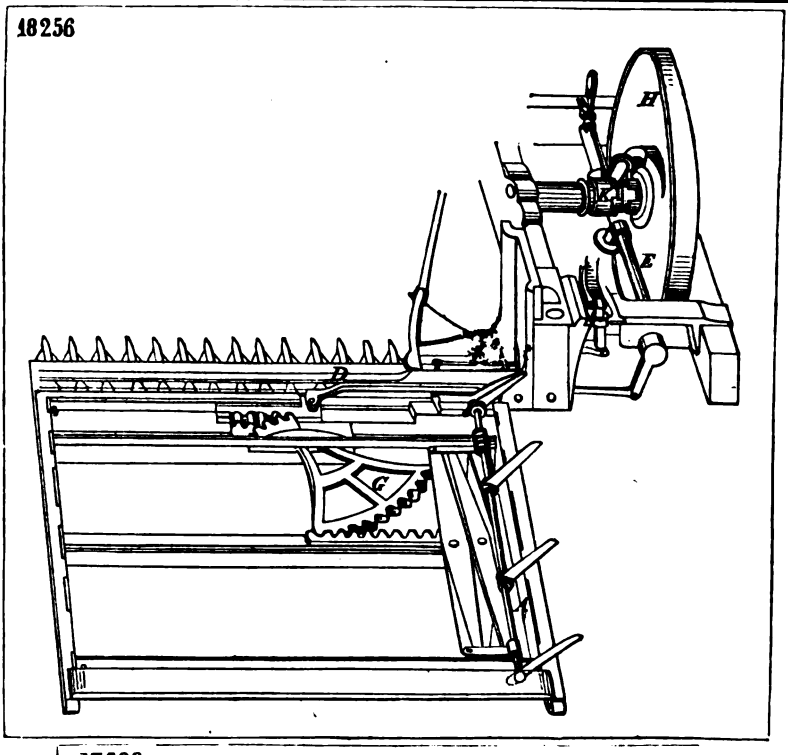

17690

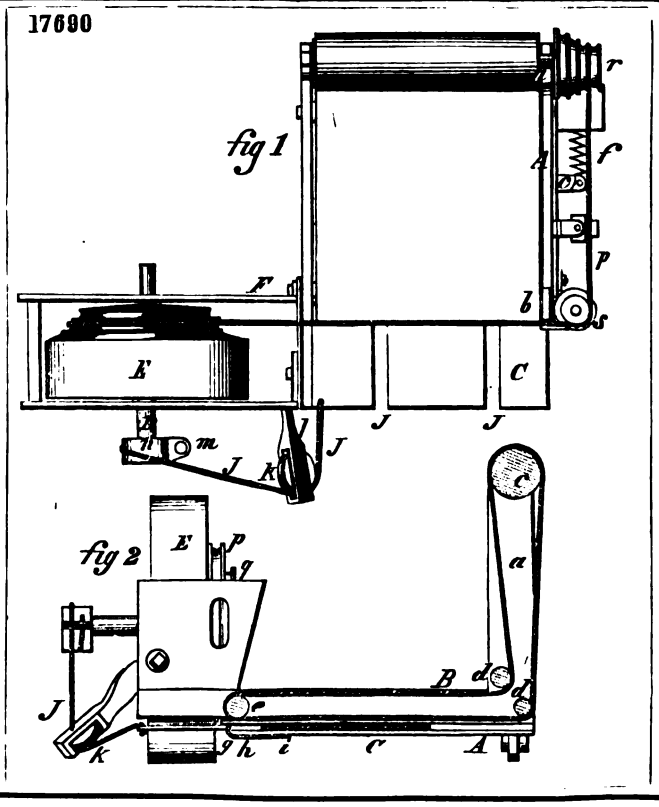

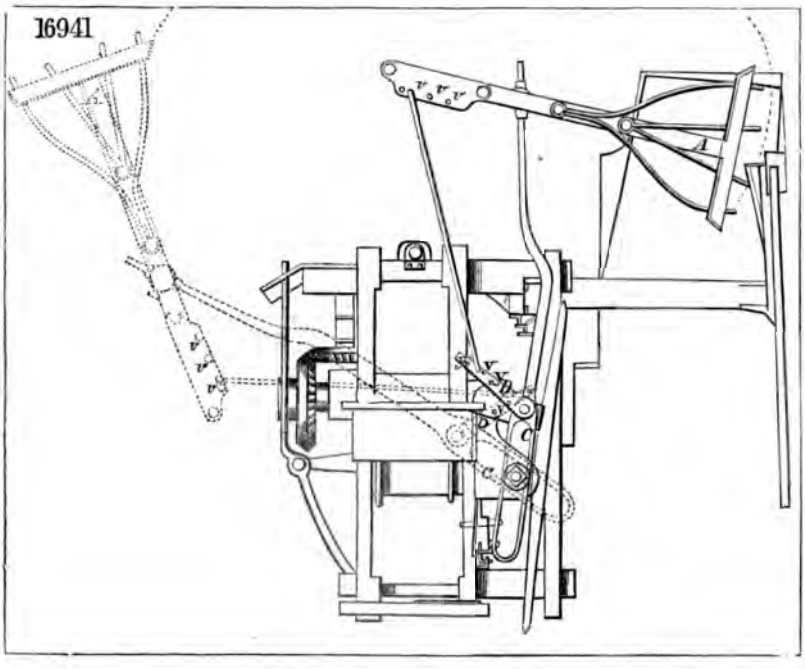
16941
A
C
D
a

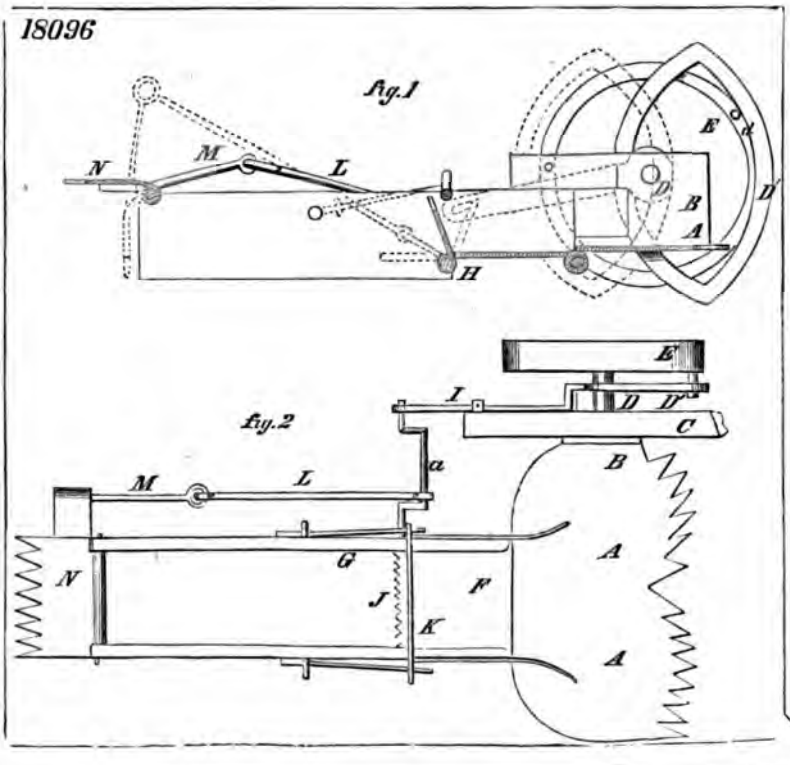
18096
Fig.1
N
M
L
H
E
d
D
B
A
D'
Fig.2
E
I
D
D'
C
B
a
M
L
G
N
J
K
F
A
A

17798

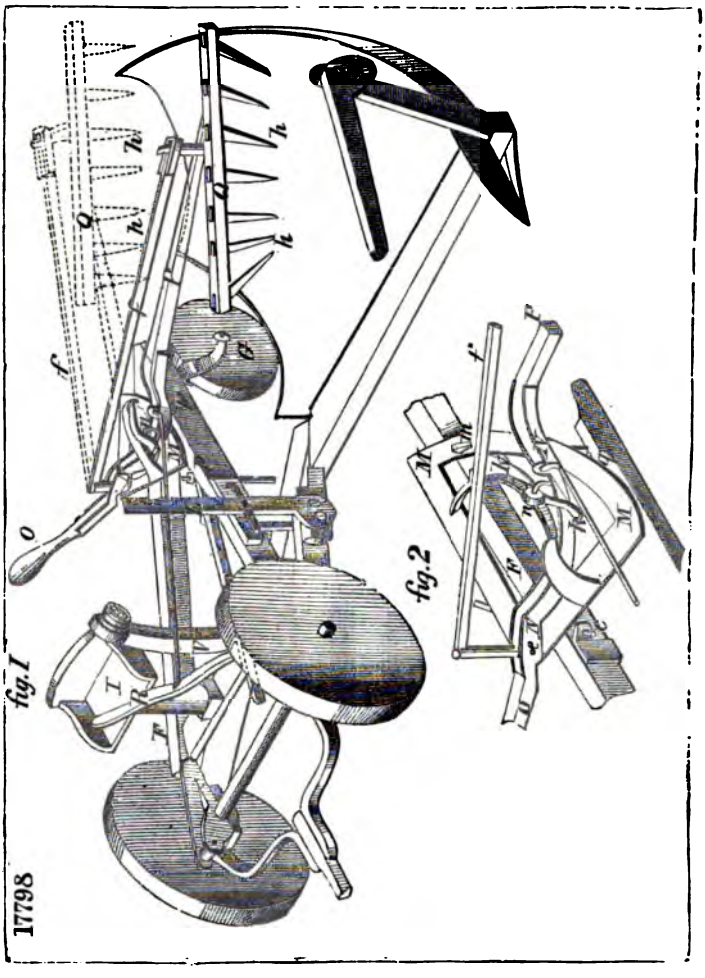

19002

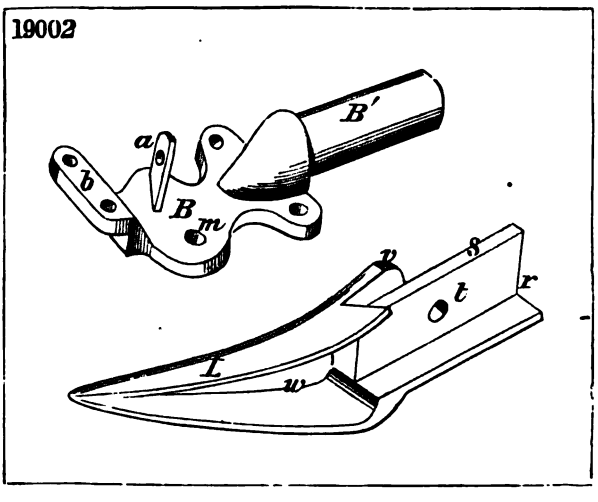

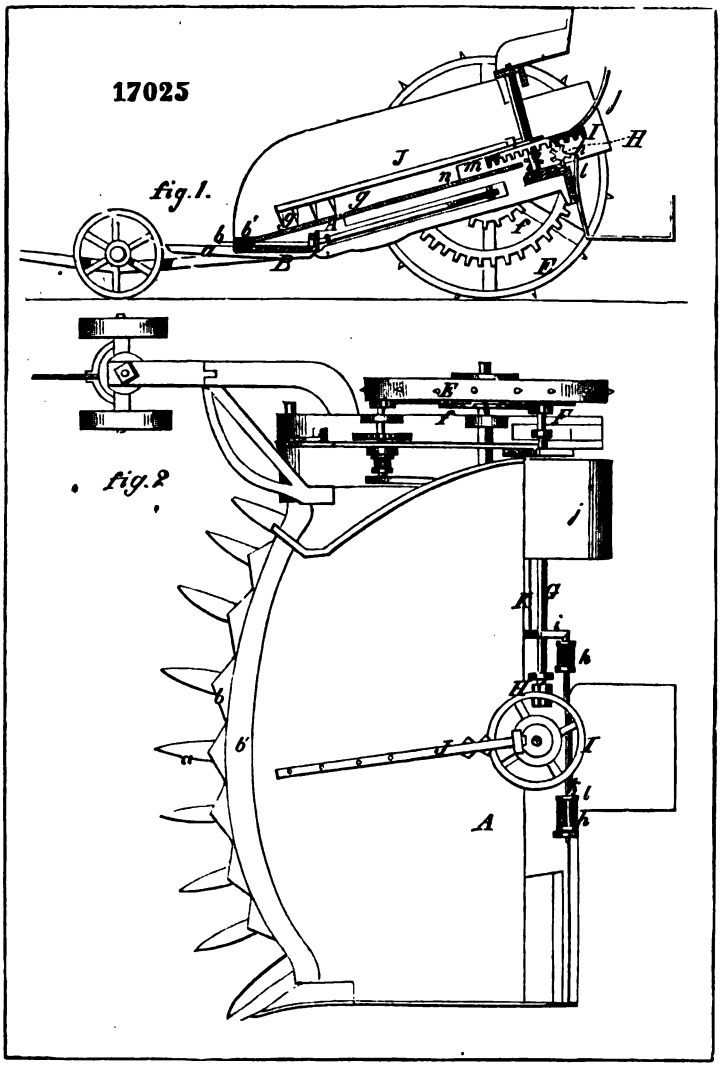
17025
fig. 1.
fig. 2
A

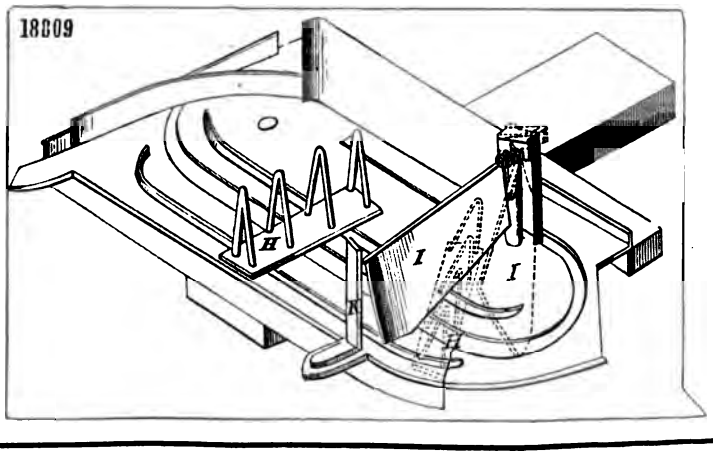
18809
H
I
I

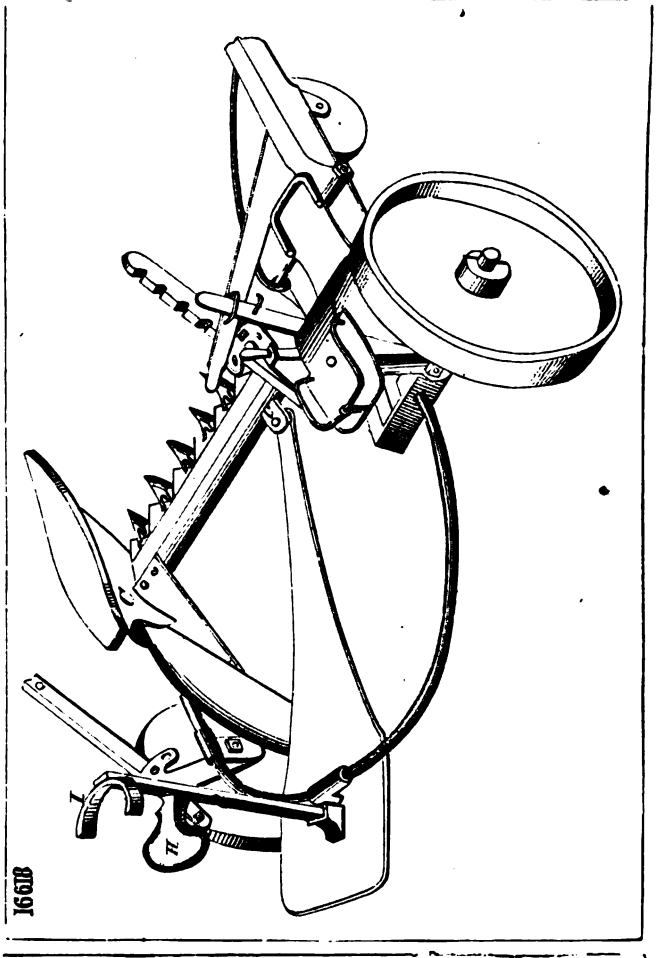
16618
C
I
H

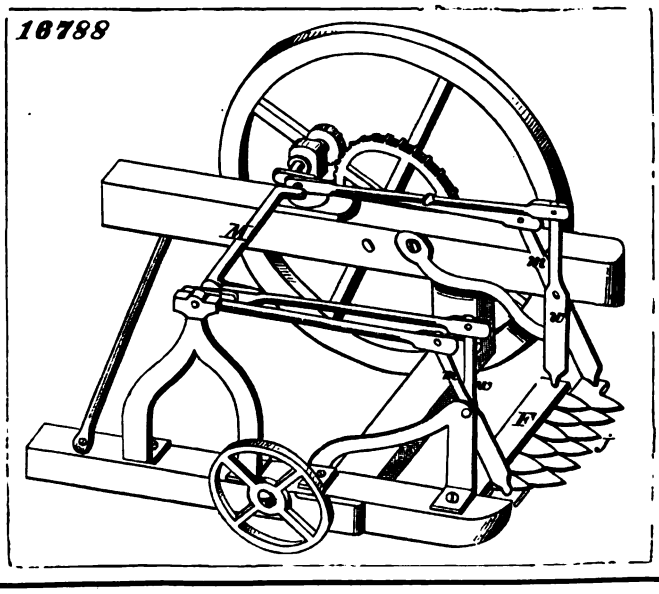
16788
M
F

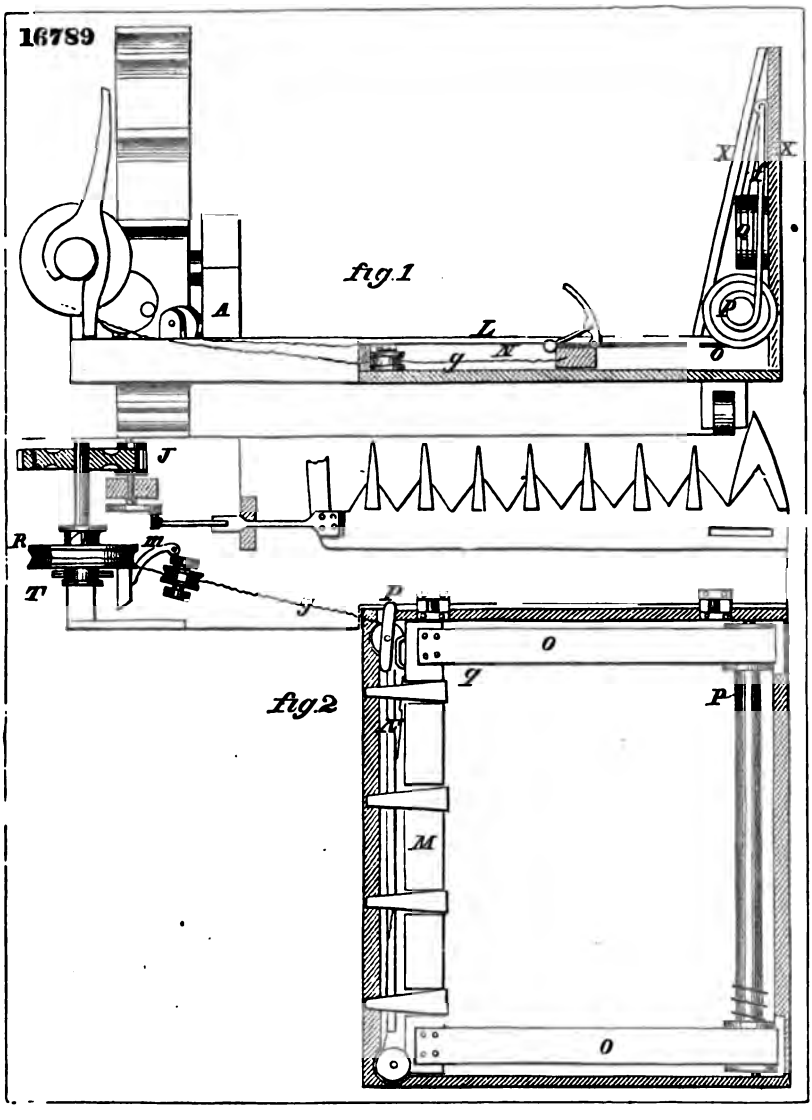
16789
fig.1
fig.2
A
L
X
X
J
R
T
P
O
M

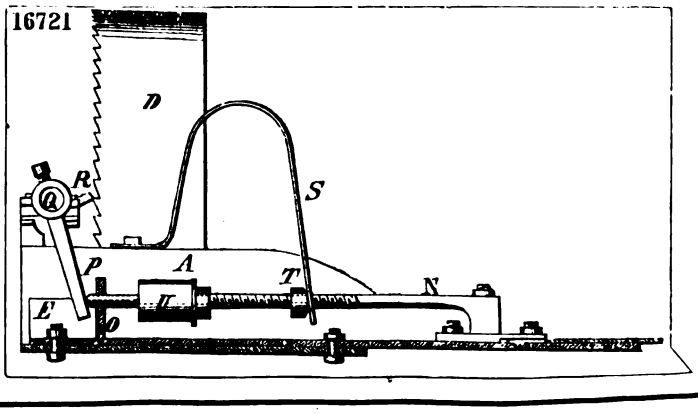
16721
D
R
S
P
A
T
N
E
O

16758

fig. 1

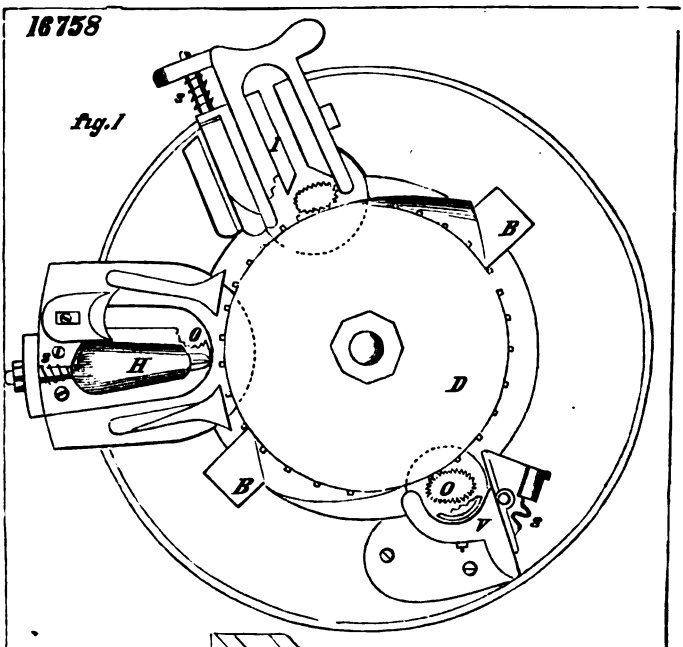

fig. 2

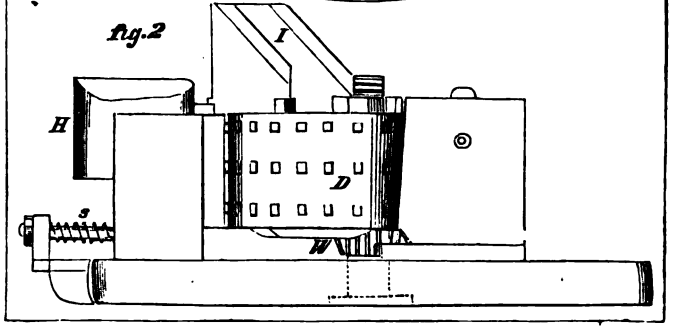

18571

fig 2

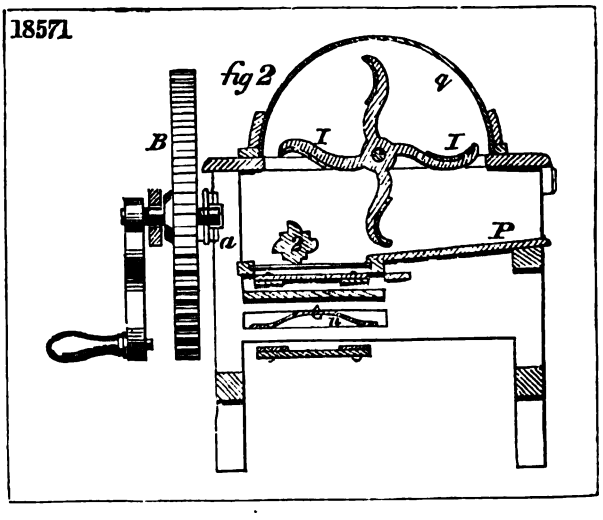

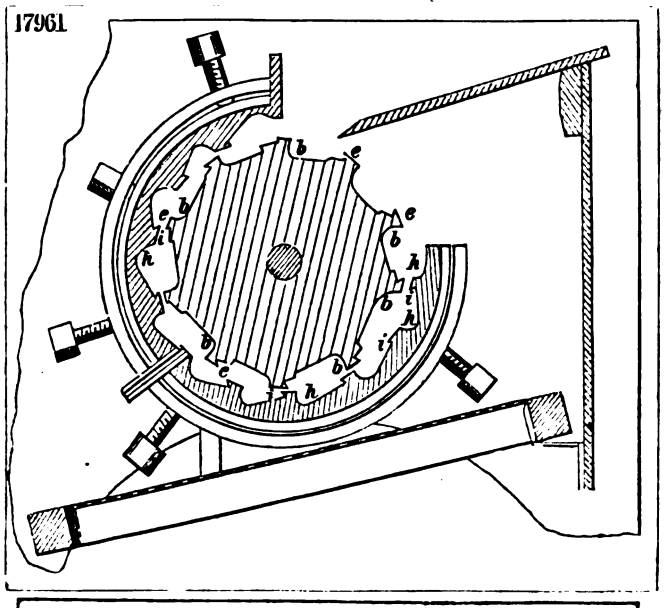
17961

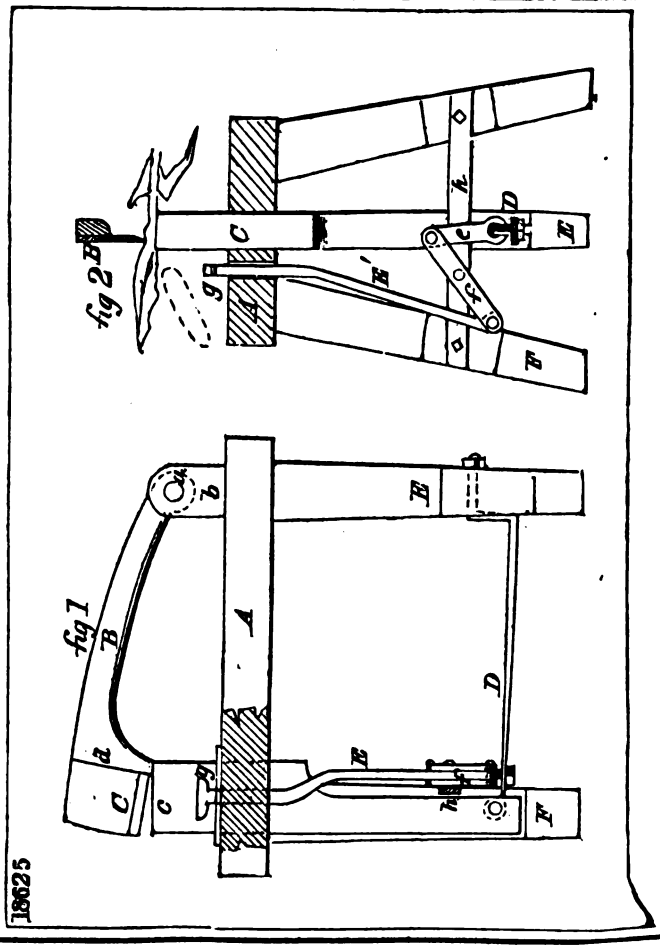
fig 2
fig 1
18625

18433

fig 1

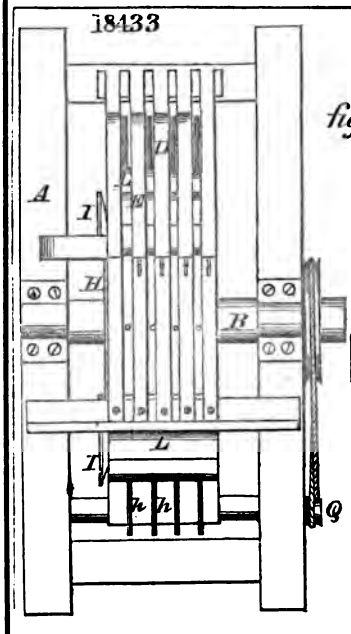

fig 2

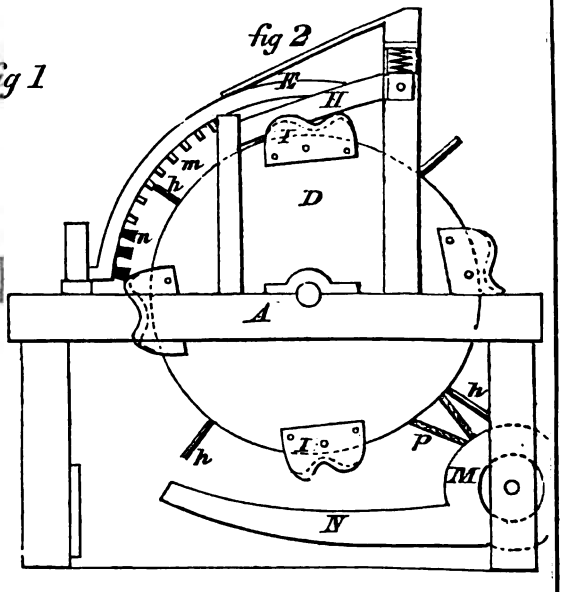

fig 3

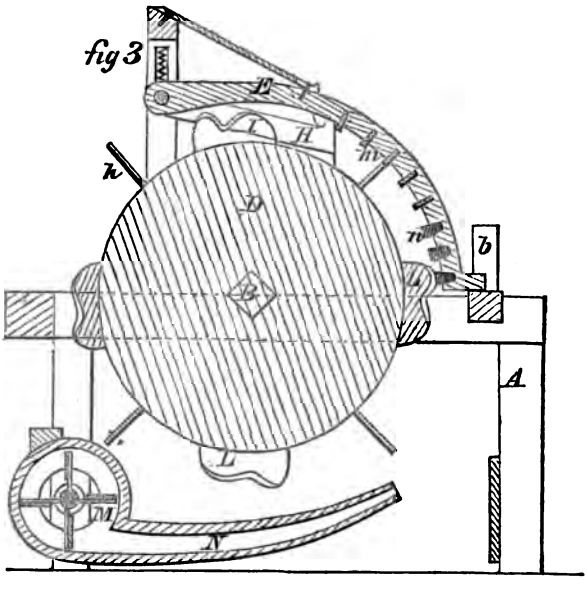

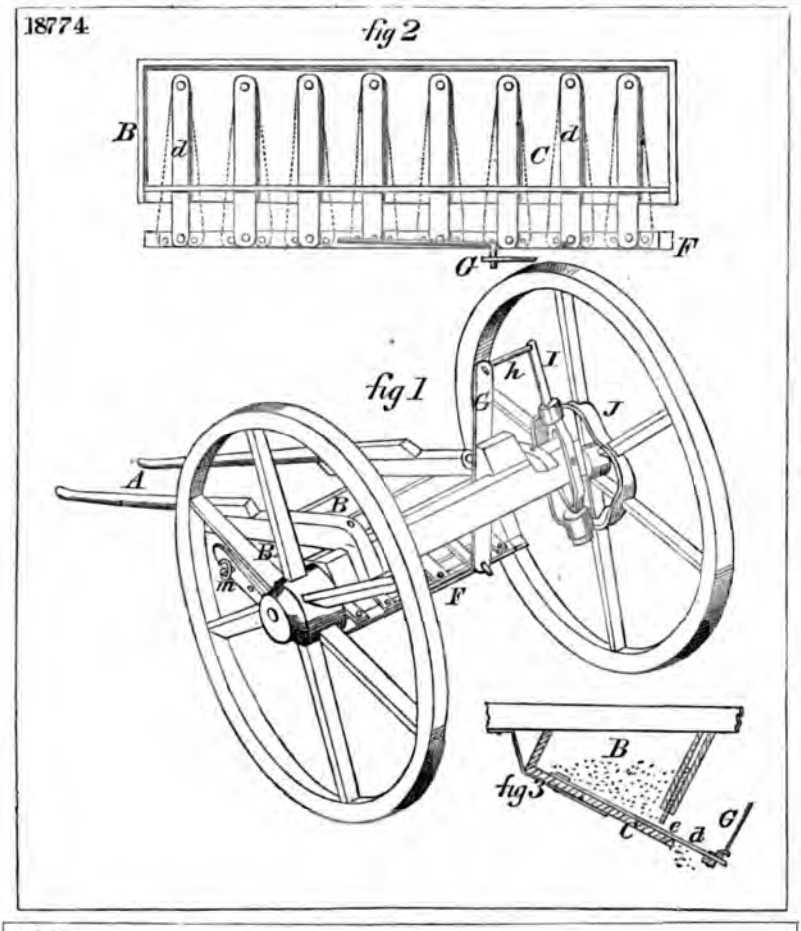
18774
fig 2
B
d
C
d
F
G
fig 1
h
I
G
J
A
B
B
m
F
B
fig 3
C
e
d
G

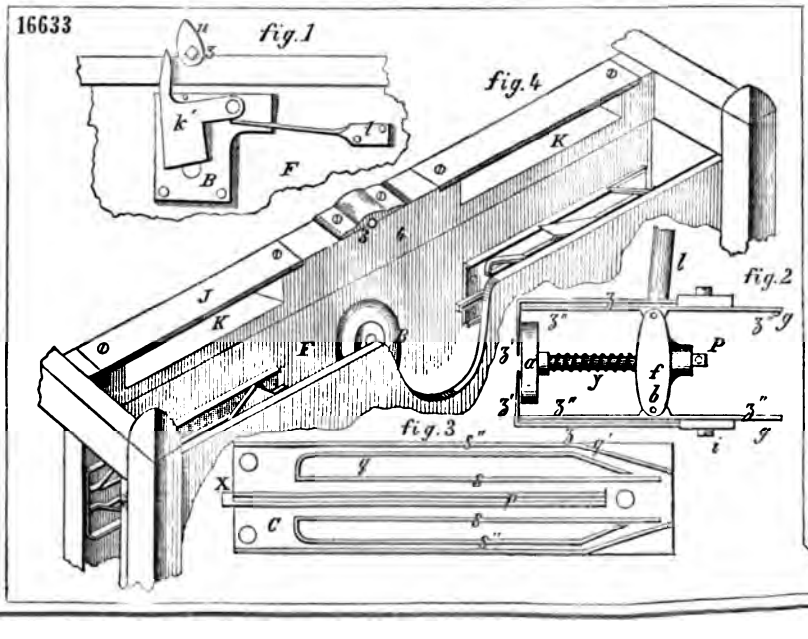
16633
fig. 1
u
s
k'
l
B
F
fig. 4
K
J
K
F
l
fig. 2
P
a
y
f
b
i
g
fig. 3
X
C

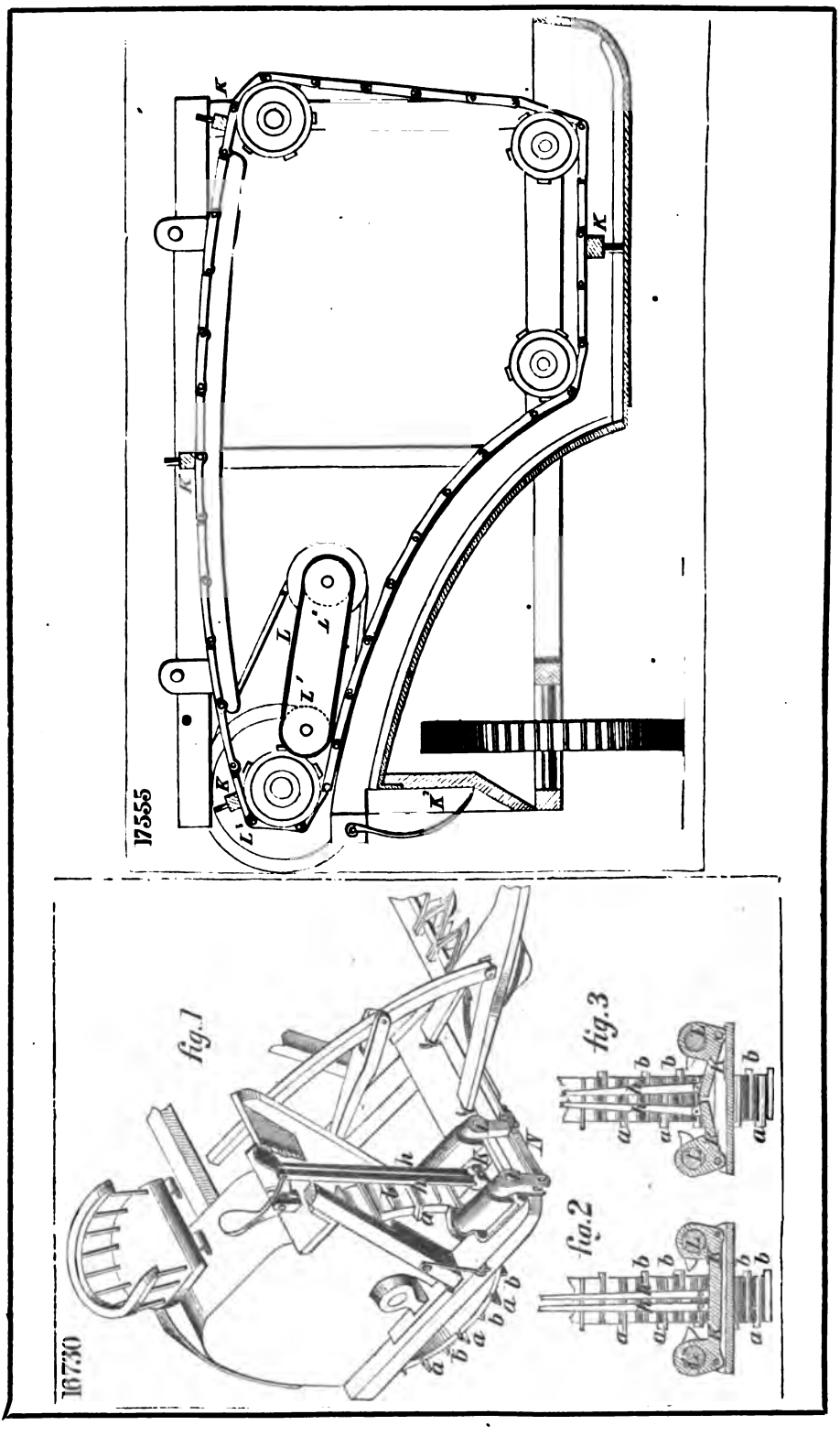
17555
16730
fig.1
fig.2
fig.3

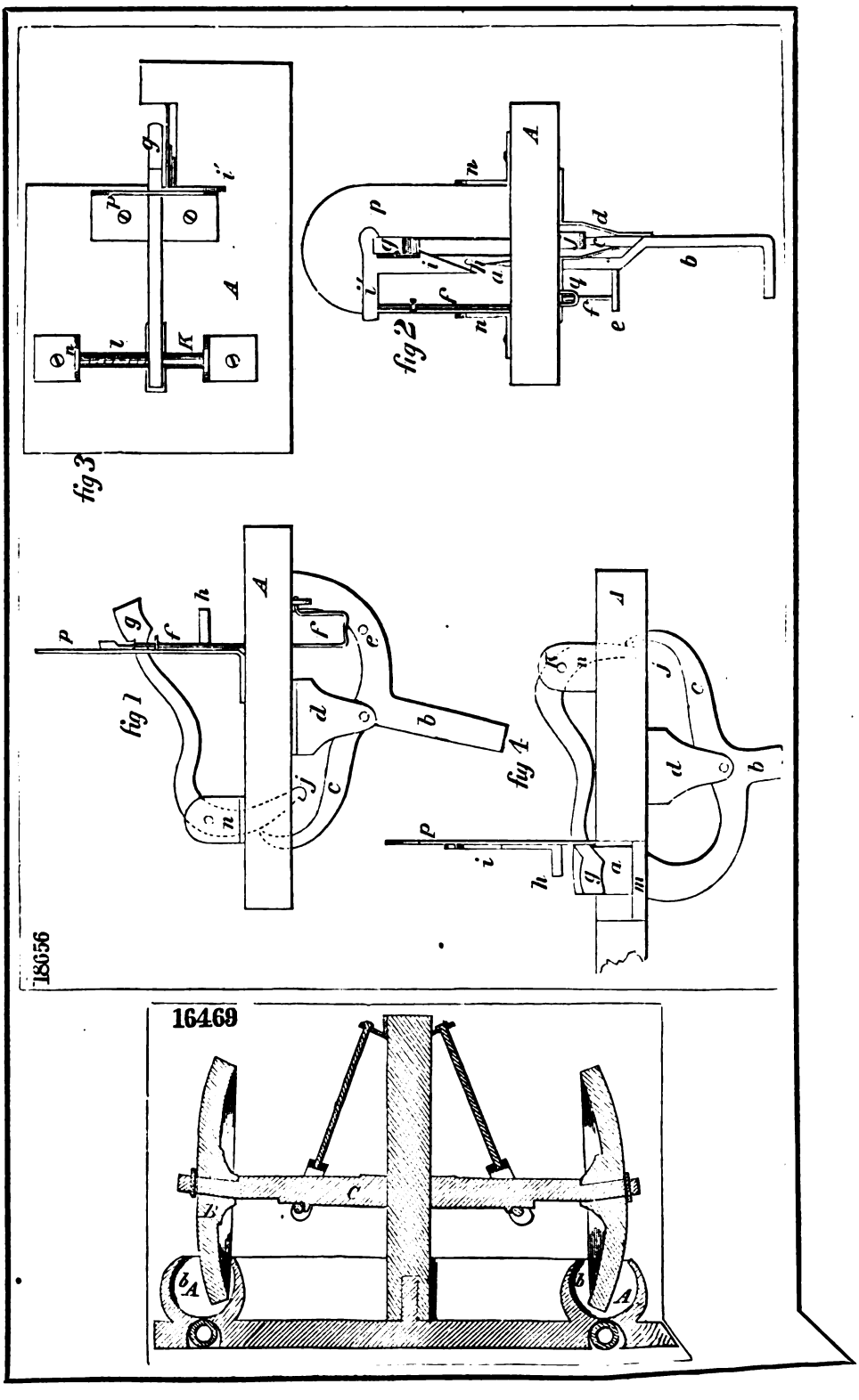
18656
fig 1
fig 2
fig 3
fig 4
16469

17134

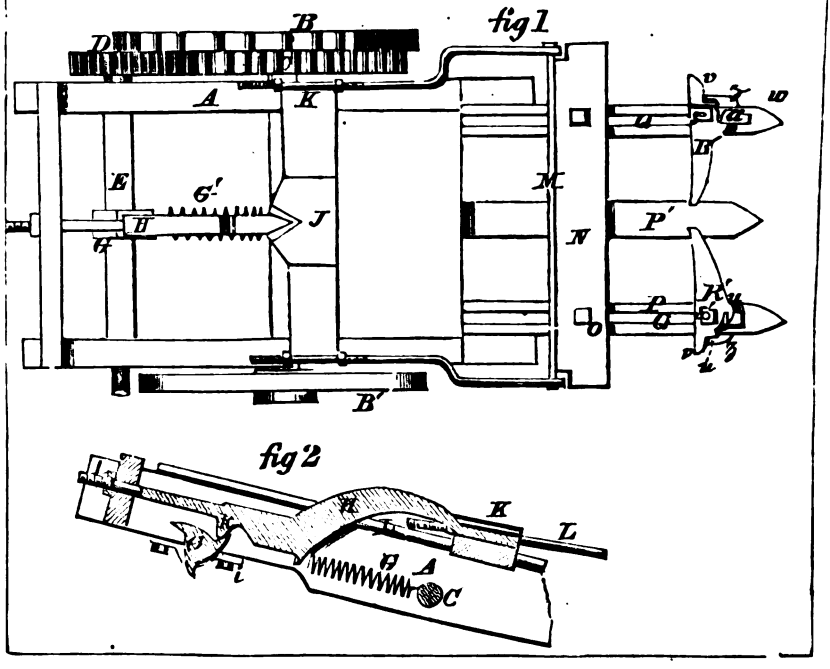

17078

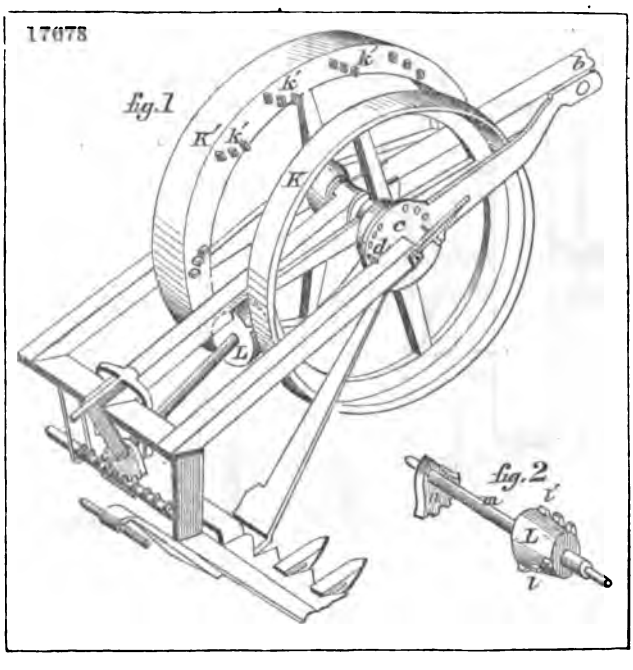

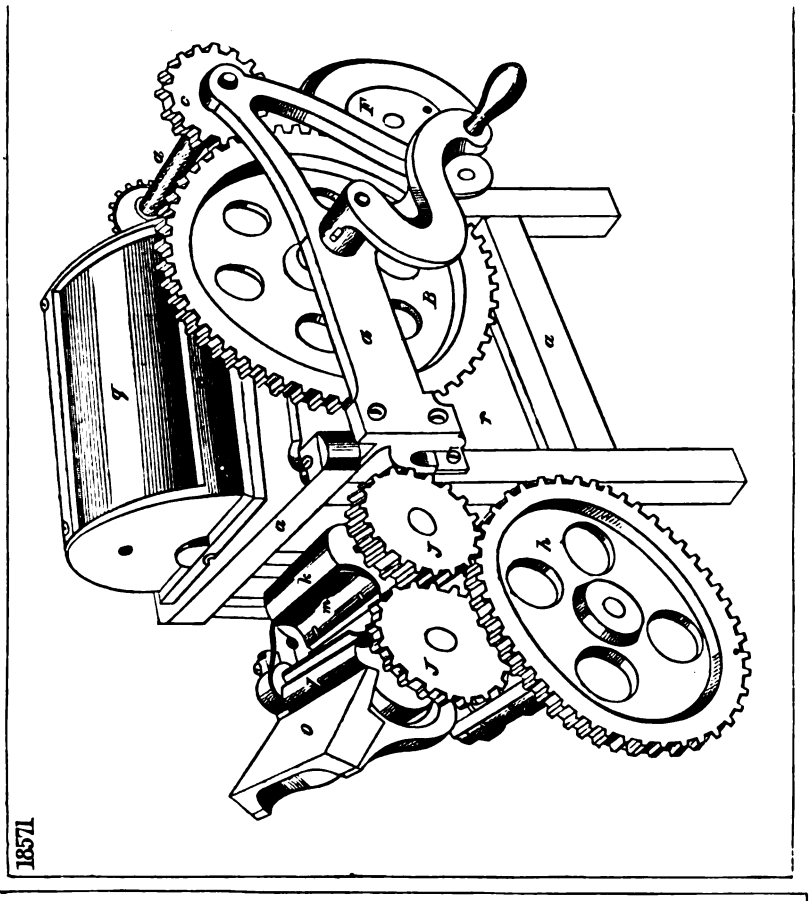
18571

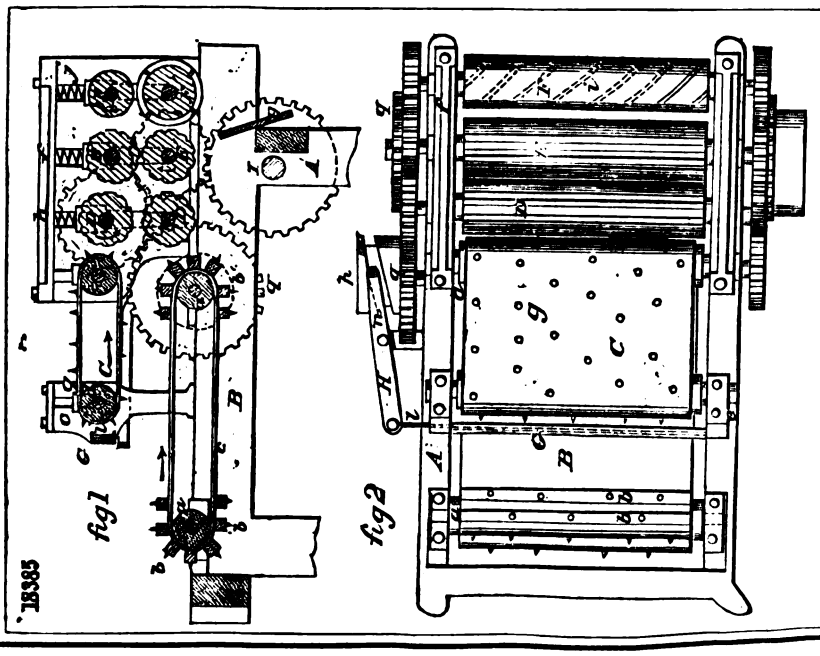
18385
fig1
fig2

18662

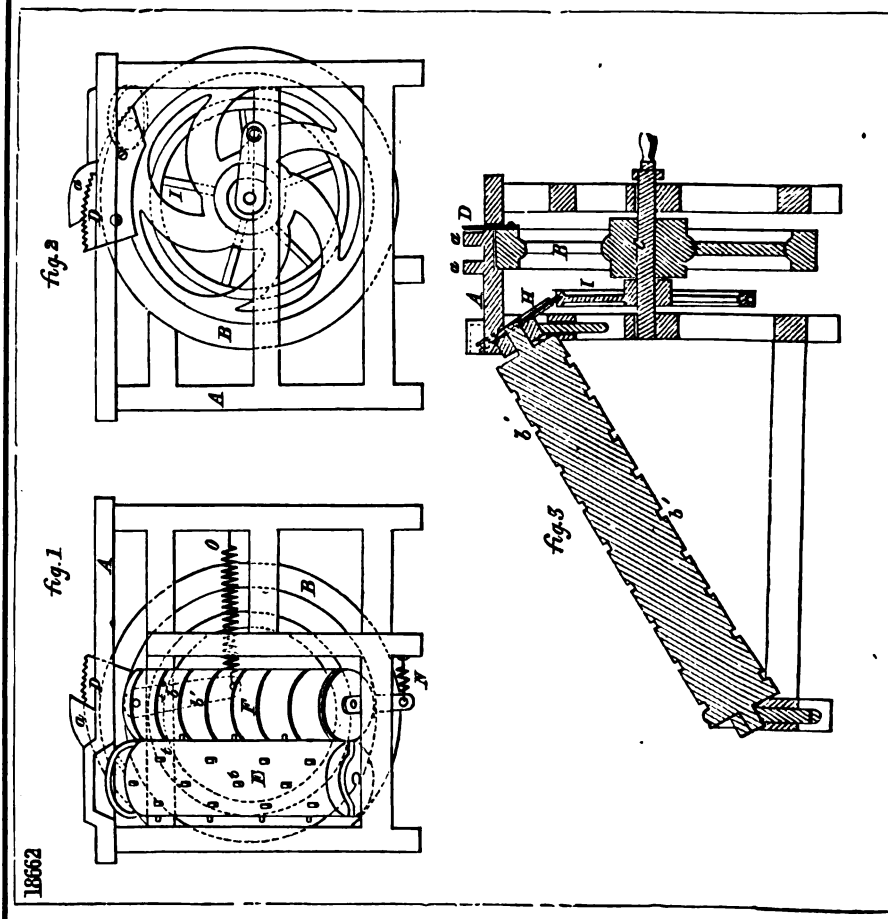

ad18571

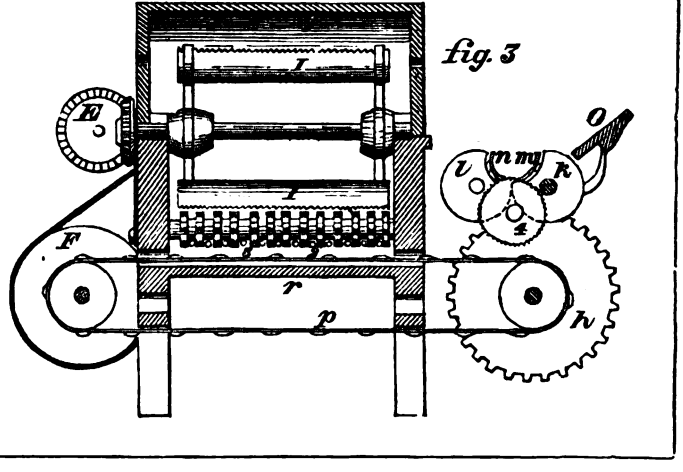

16764

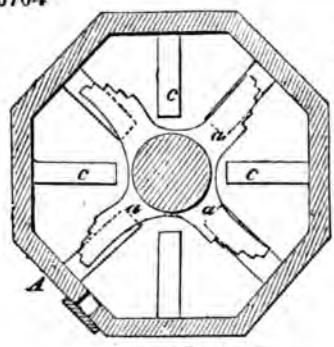

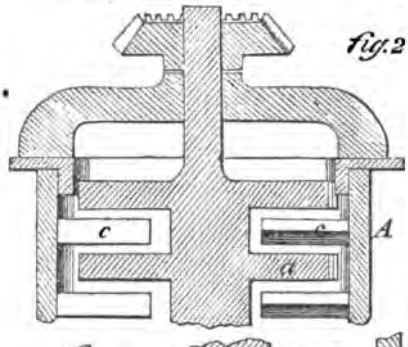

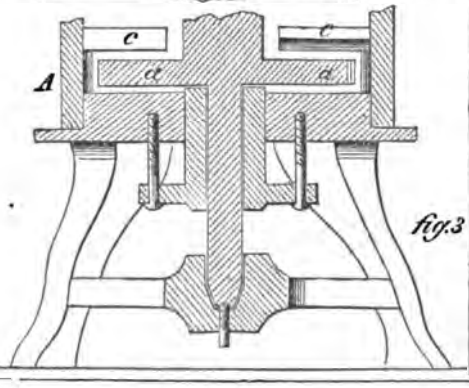

17269

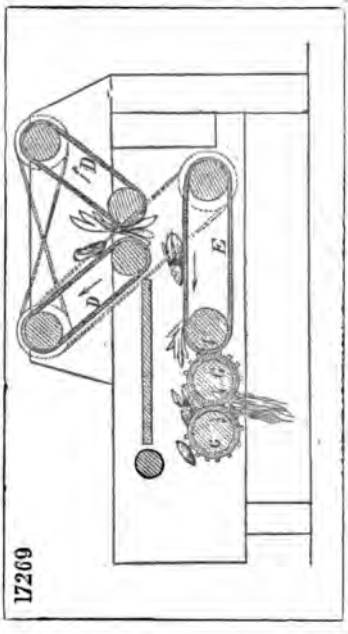

18658

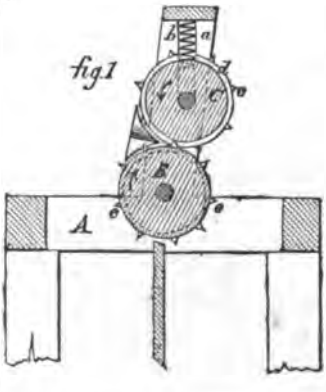

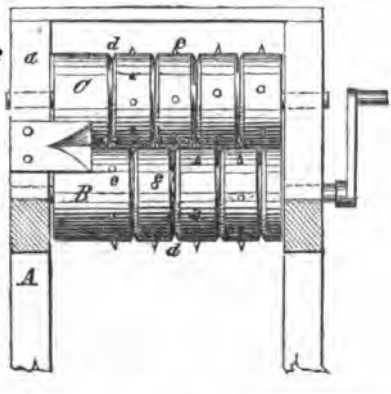

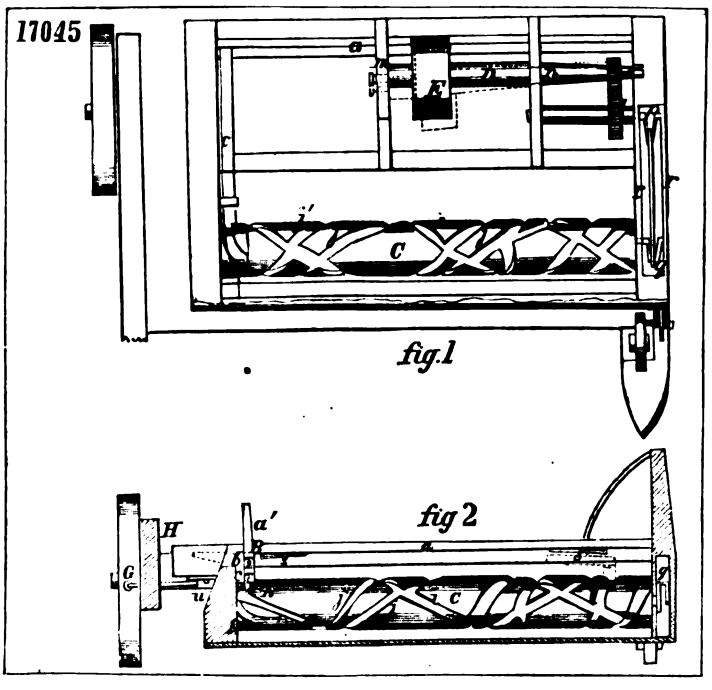
17045
a
E
C
fig.1
H
a'
fig 2
G
C

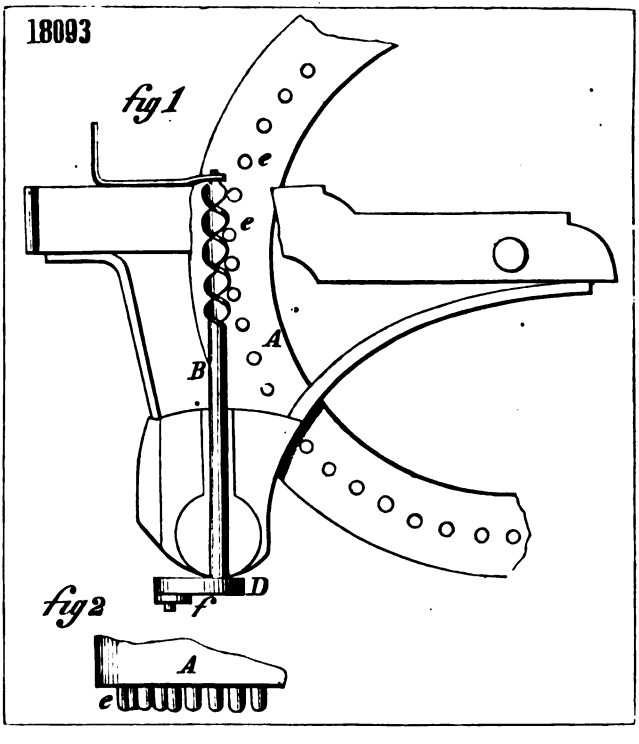
18093
fig 1
e
e
A
B
D
f
fig 2
A
e

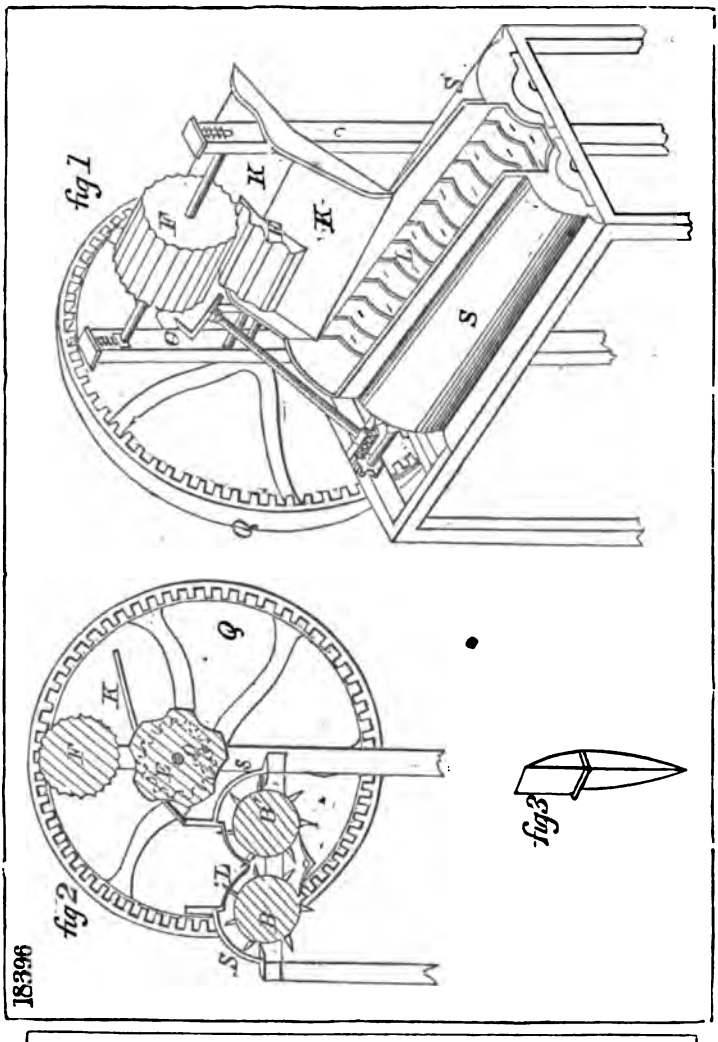
18396
fig 1
fig 2
fig 3

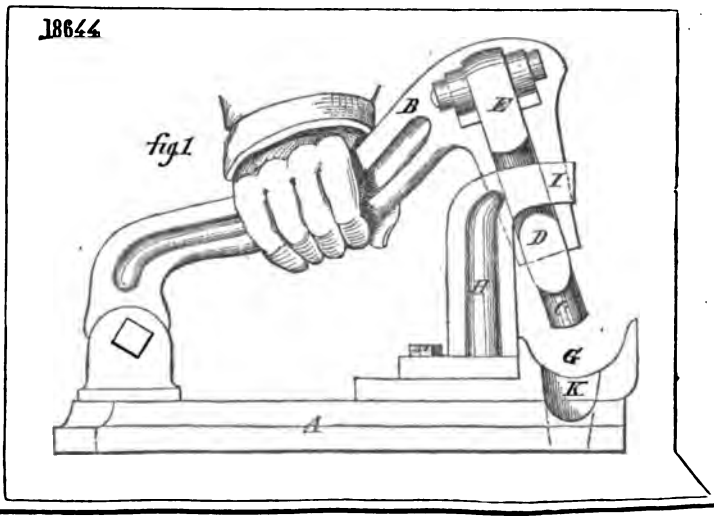
18644
fig 1

17451

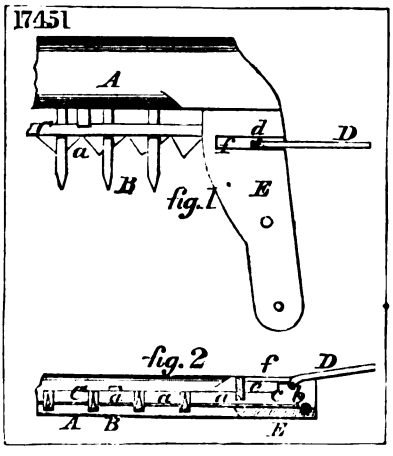

16968

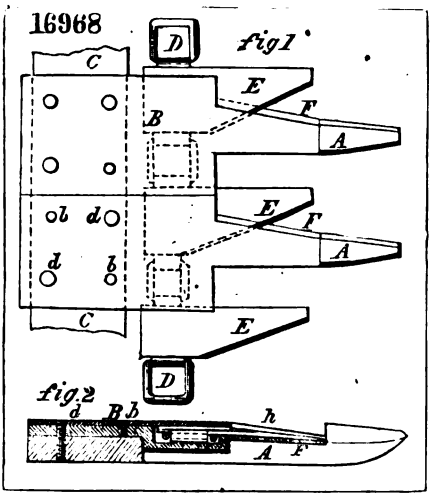

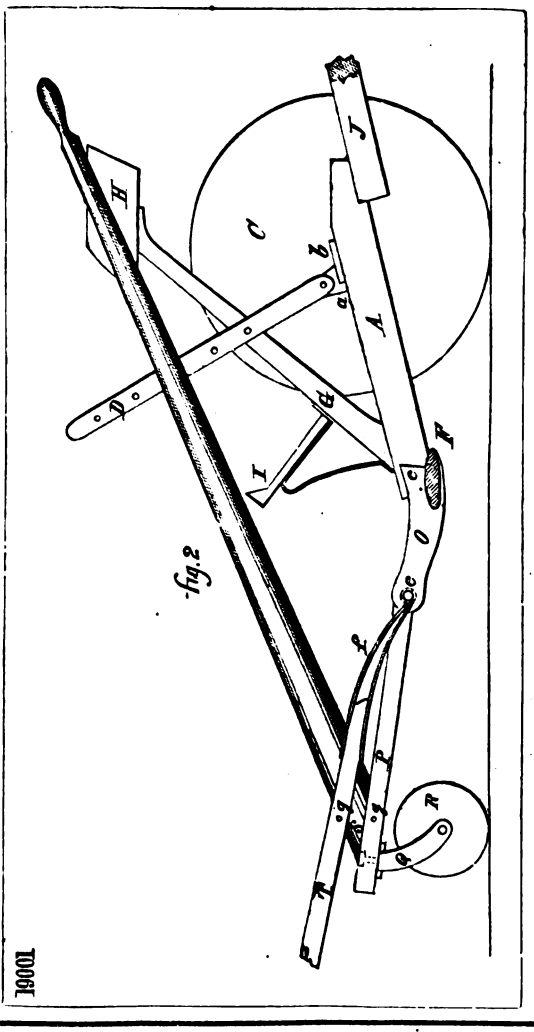

18173

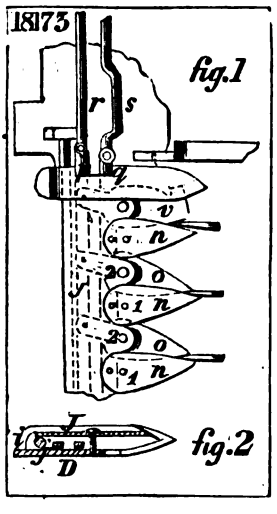

16442

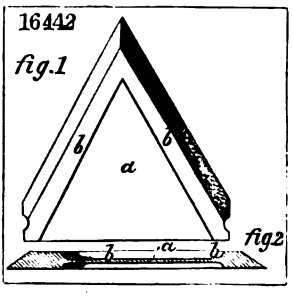

19001

18473

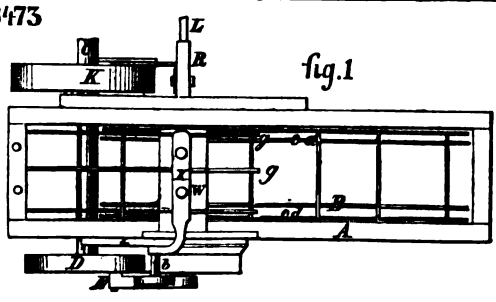

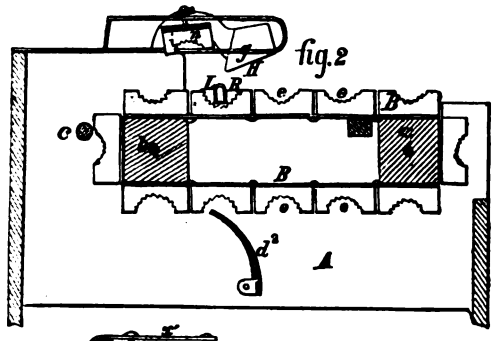

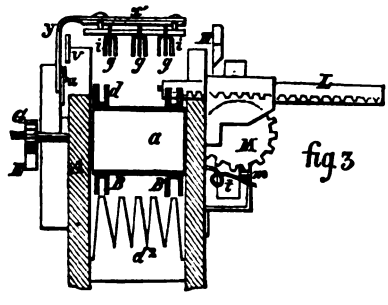

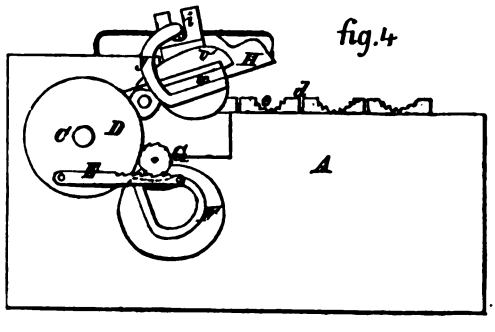

16740

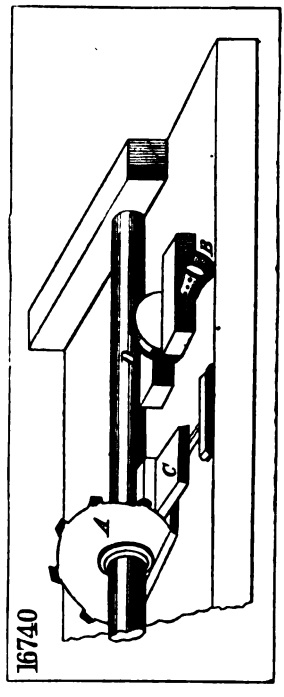

18332

fig. 1

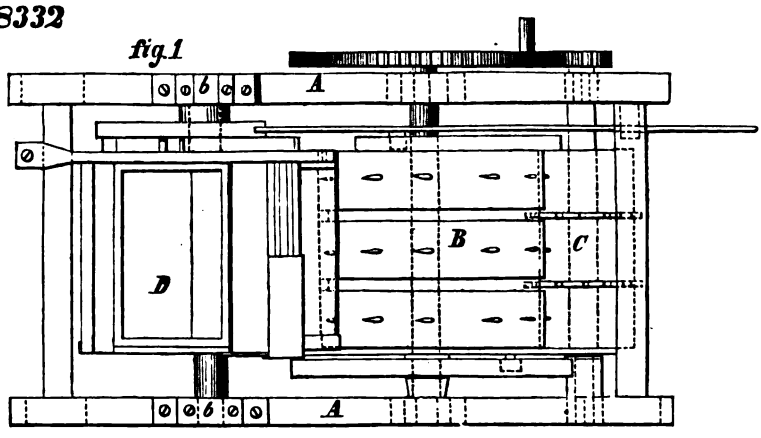

fig. 2.

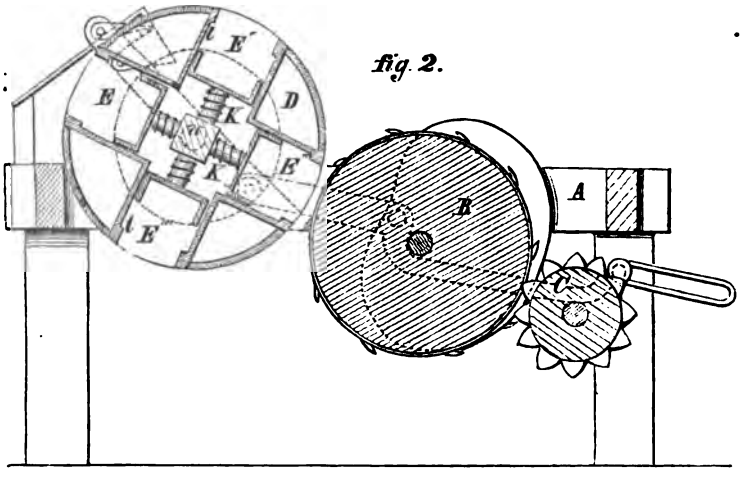

18358

fig. 1

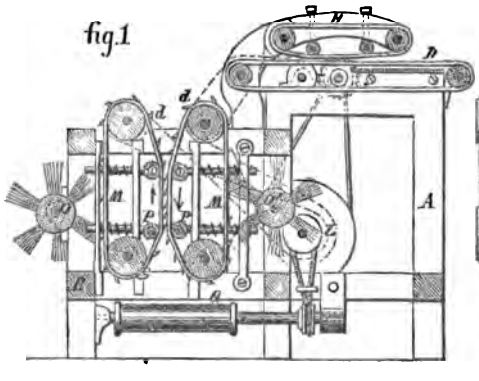

fig. 2

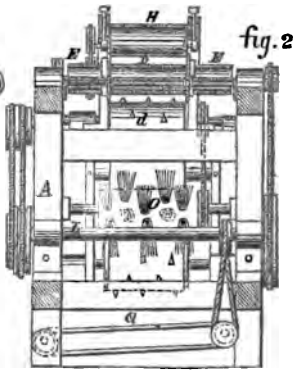

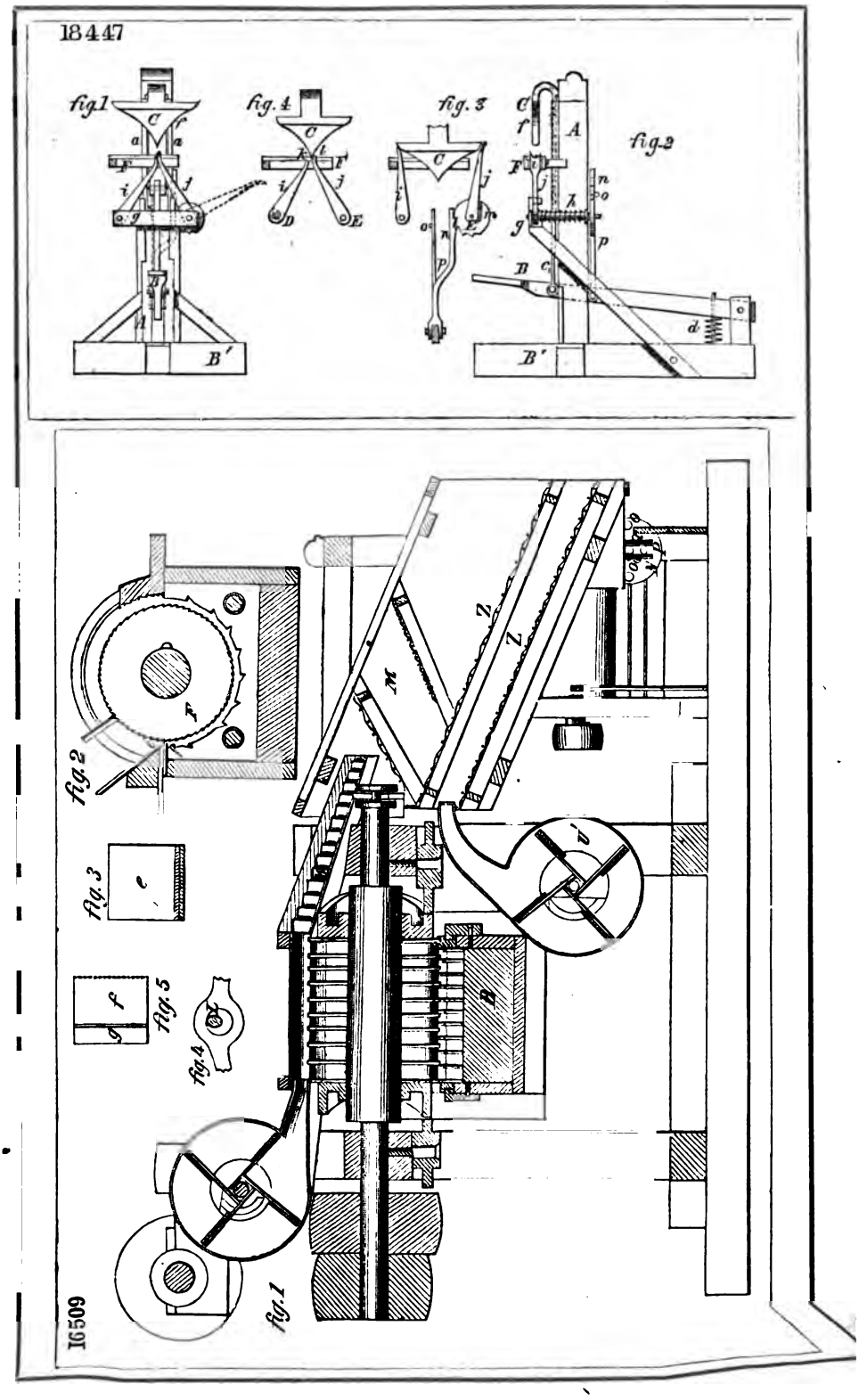
18447
fig.1
fig.4
fig.3
fig.2
B'
16509
fig.1
fig.2
fig.3
fig.4
fig.5

16462

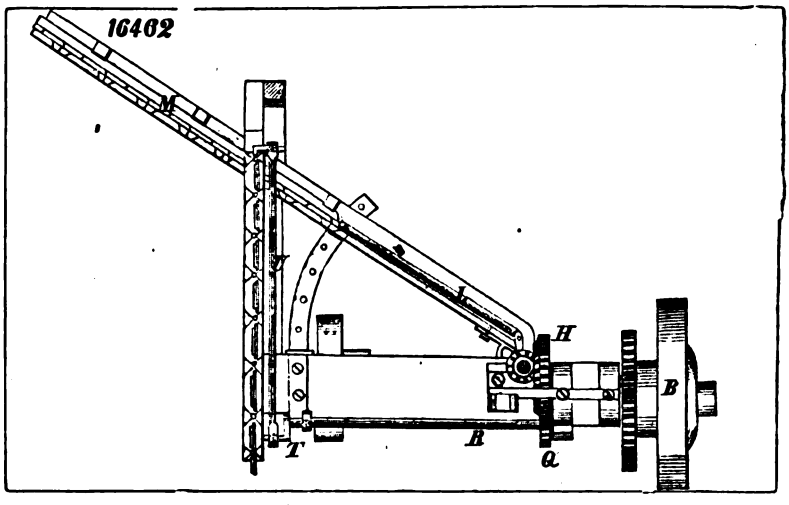

17764

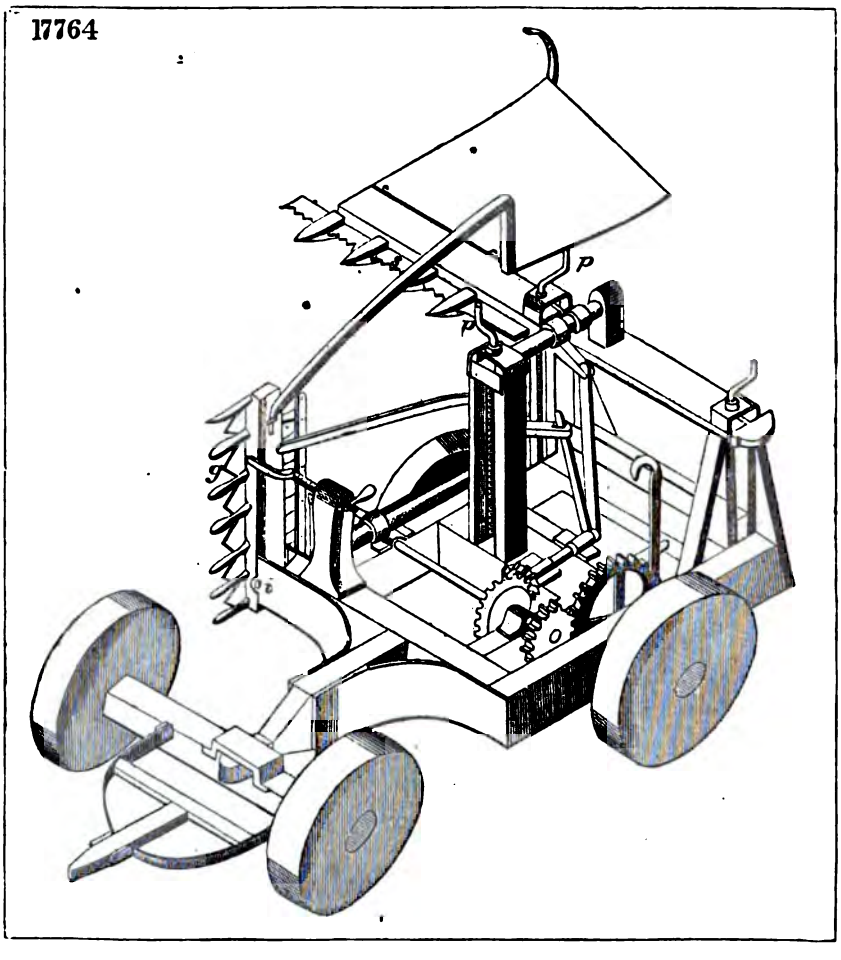

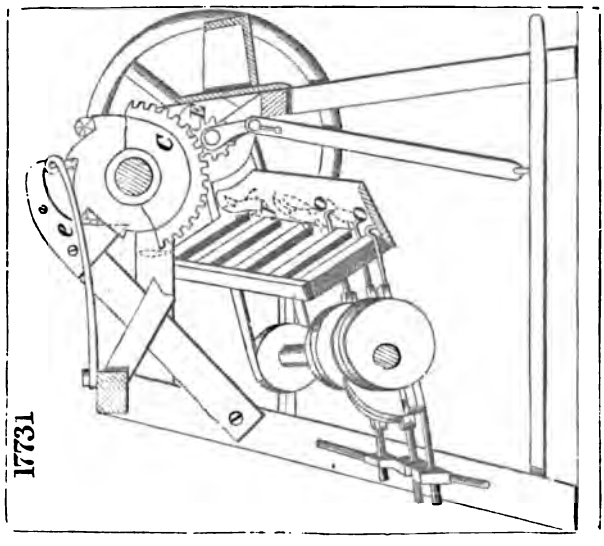
17731
C
e

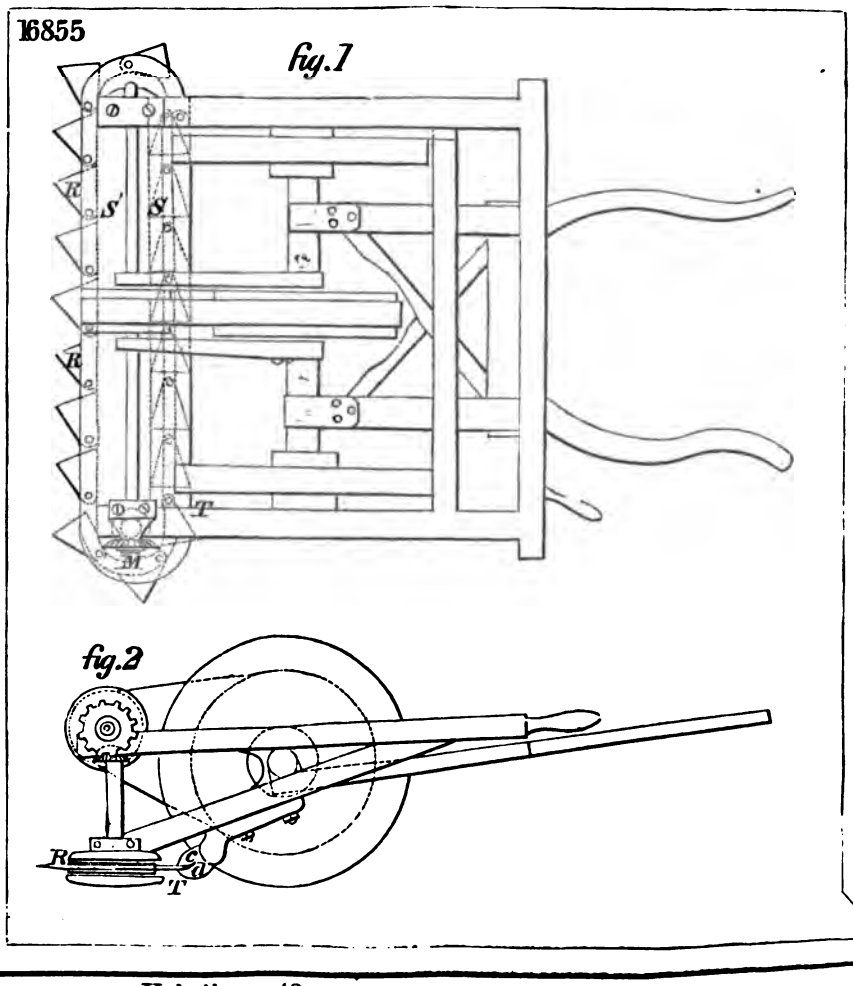
16855
fig.1
R
S'
S
R
T
M
fig.2
R
C
T

17597

fig.1

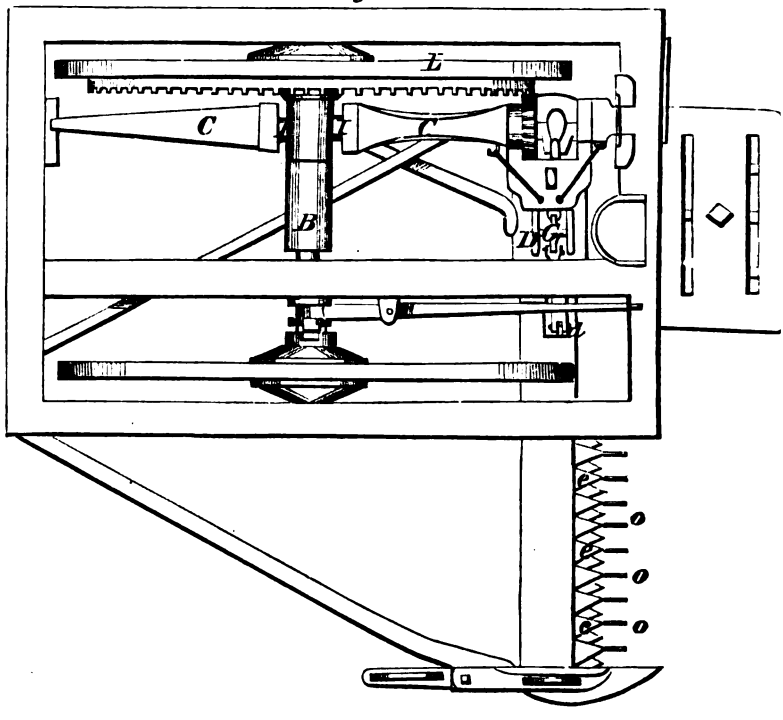

fig.2

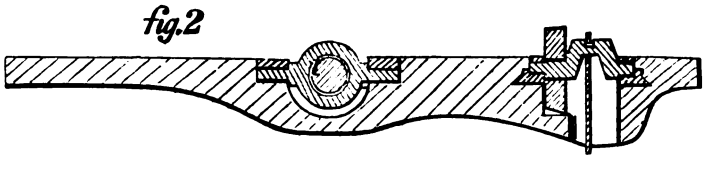

fig.3

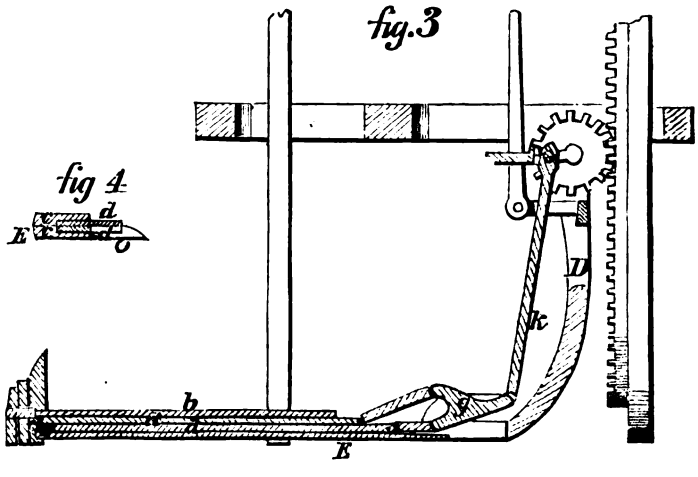

fig 4

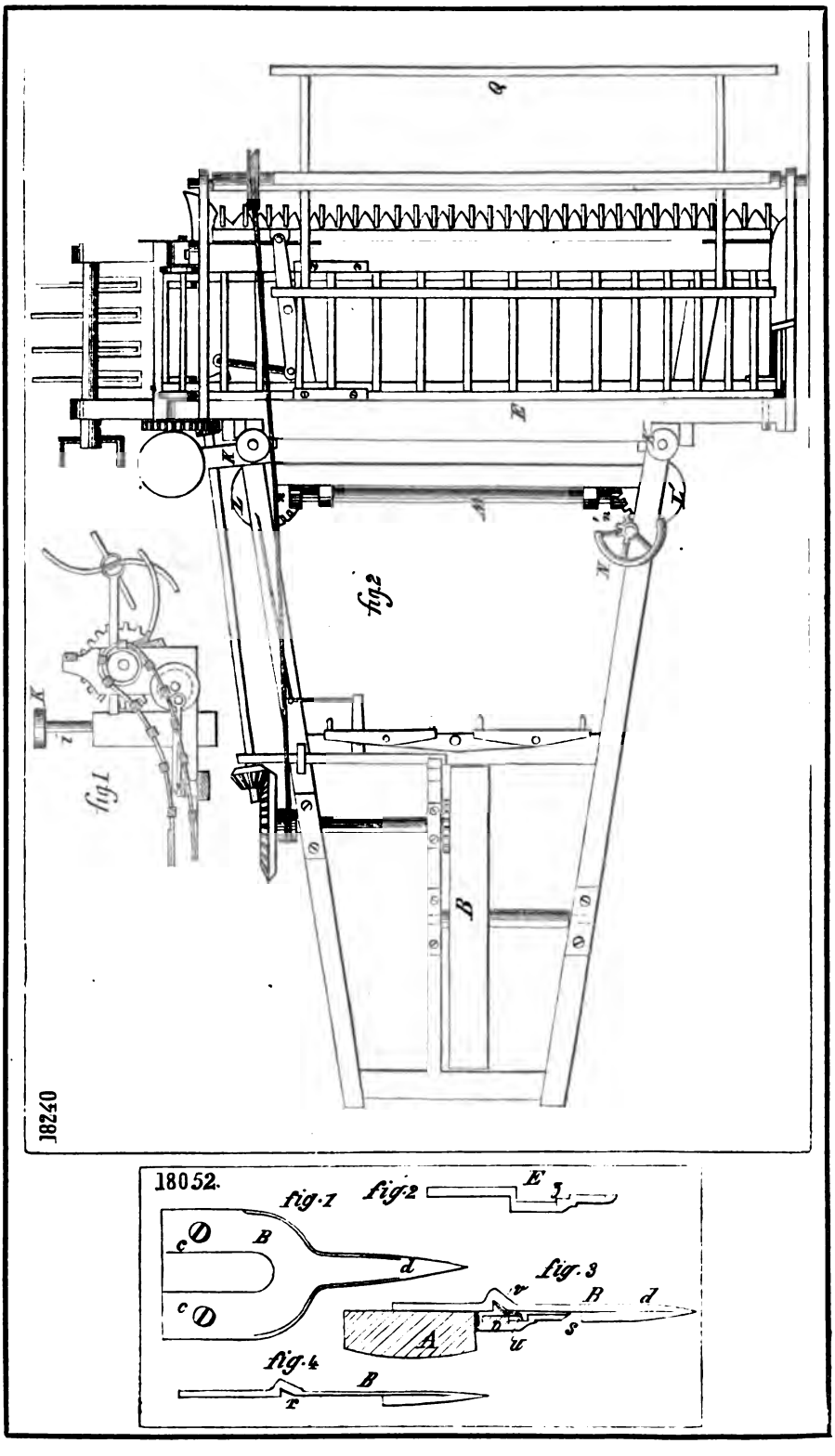
18240
fig.1
fig.2
18052.
fig.1
fig.2
fig.3
fig.4

17729

fig.1

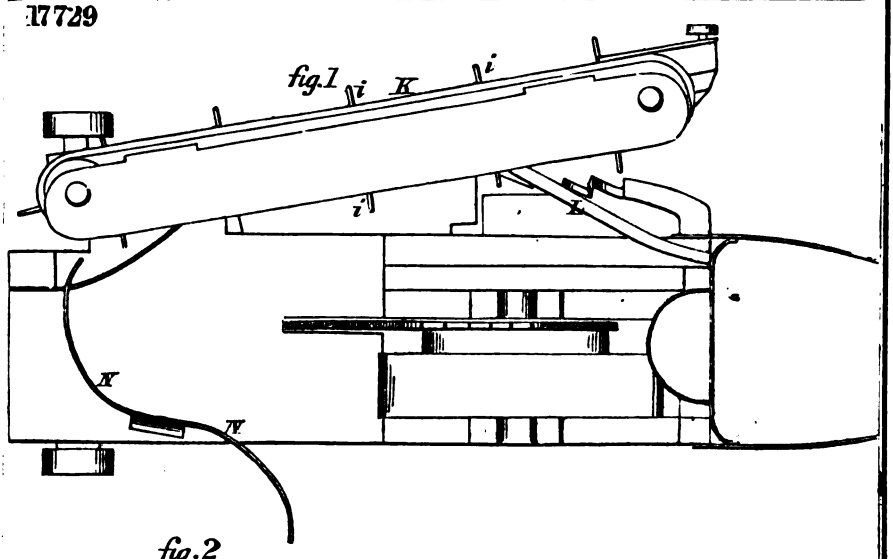

fig.2

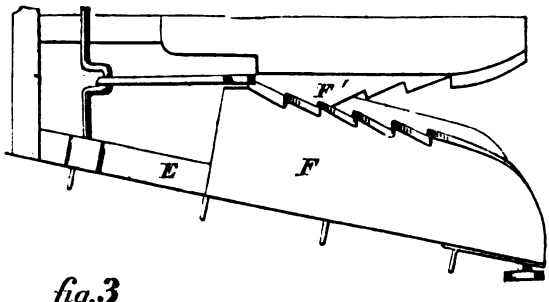

fig.3

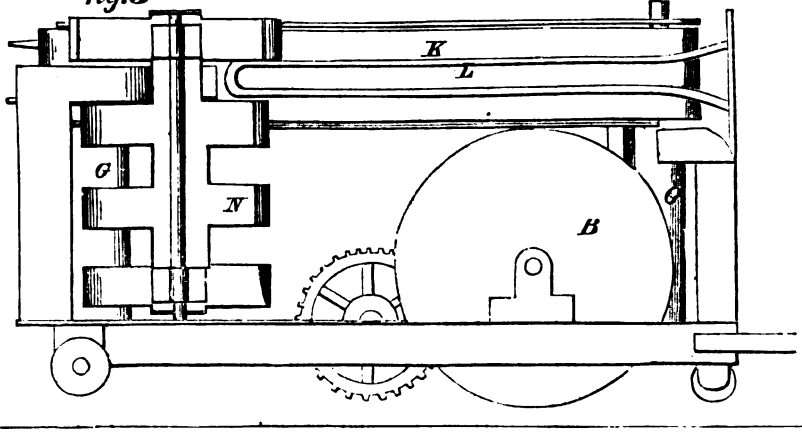

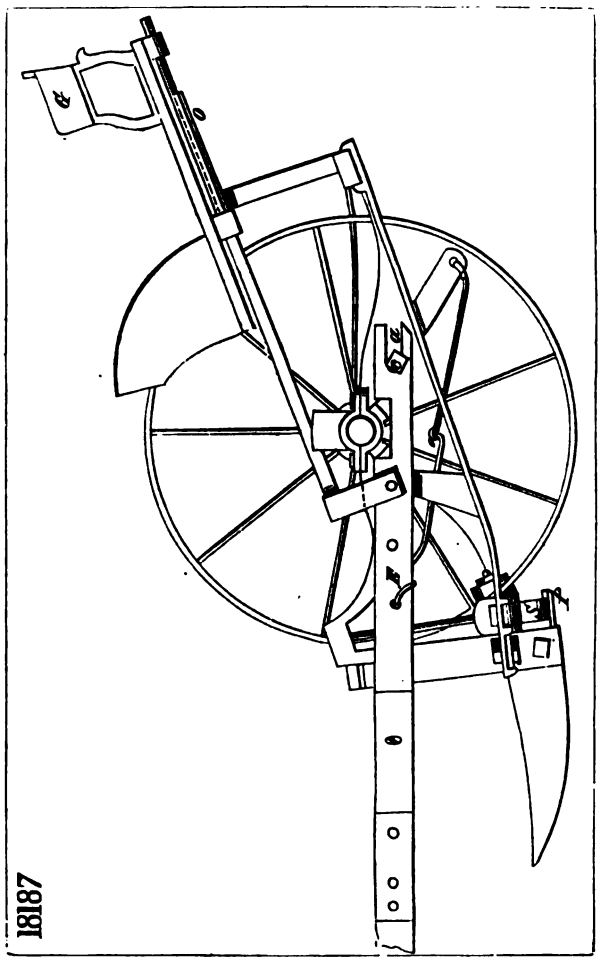
18187

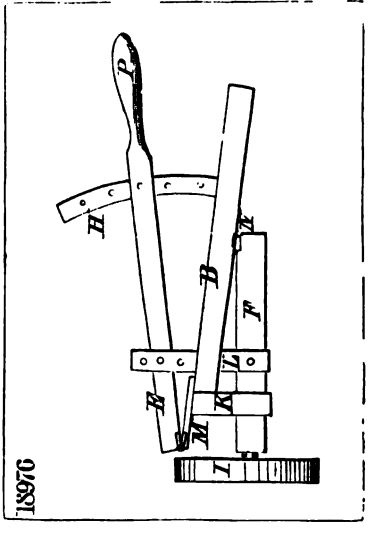
18976

18510

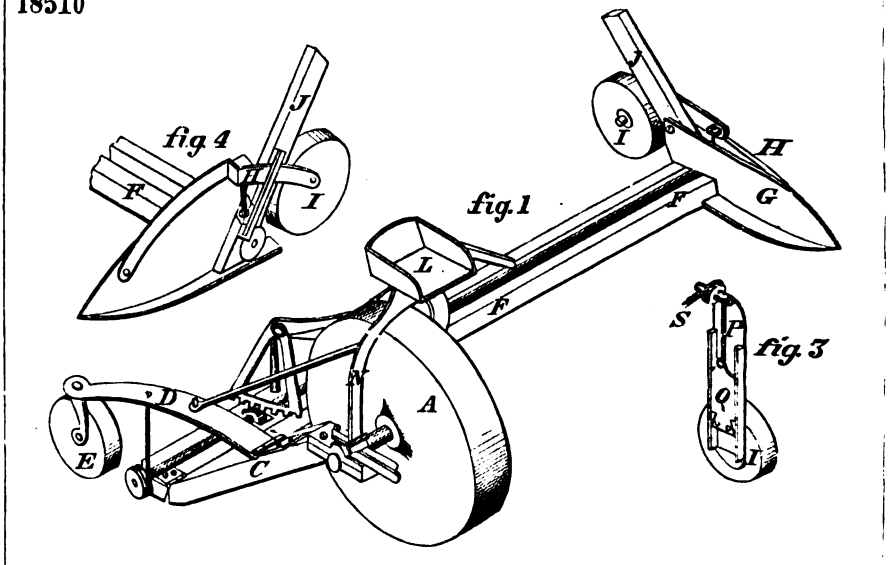

18983

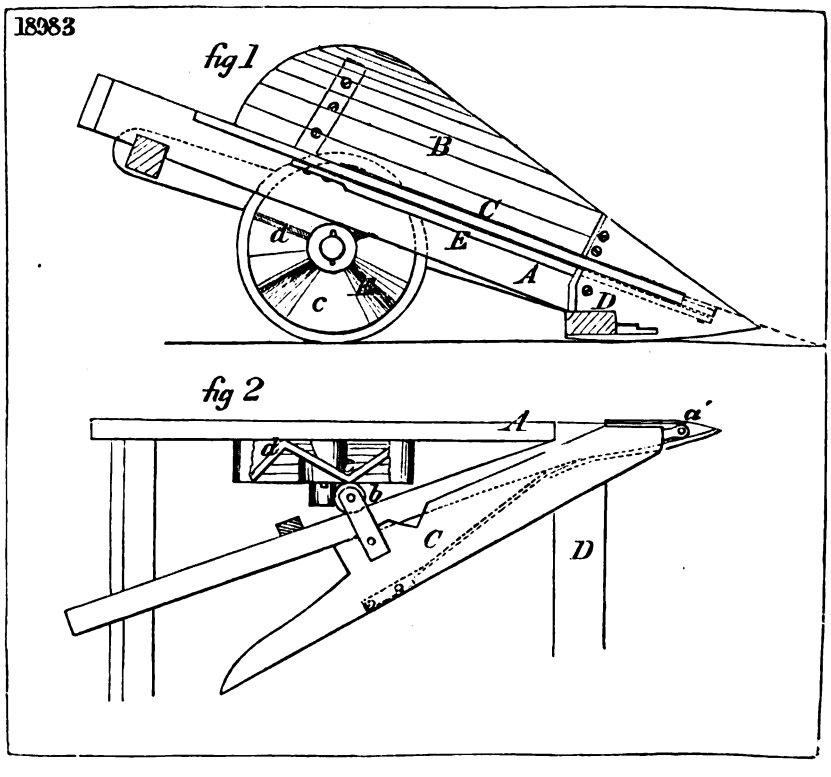

17417

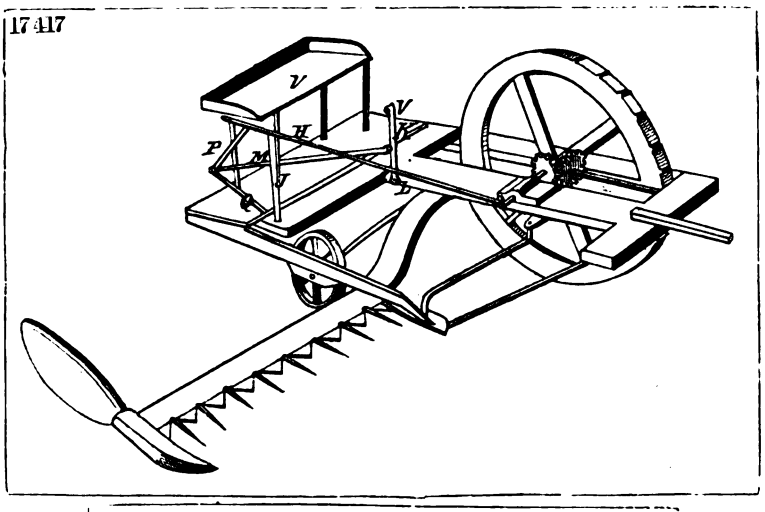

17357

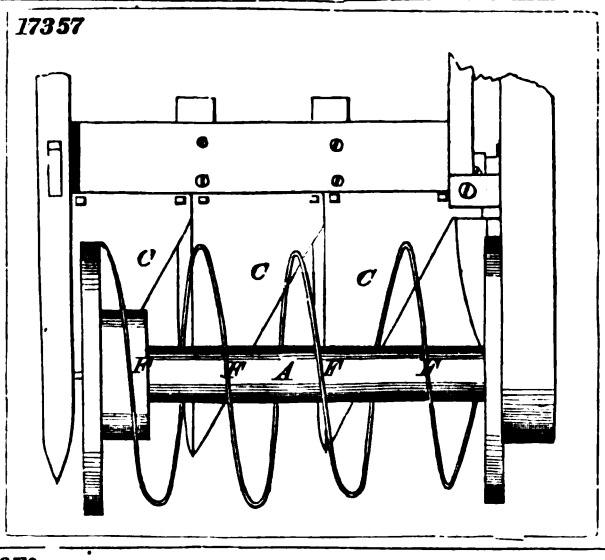

18510

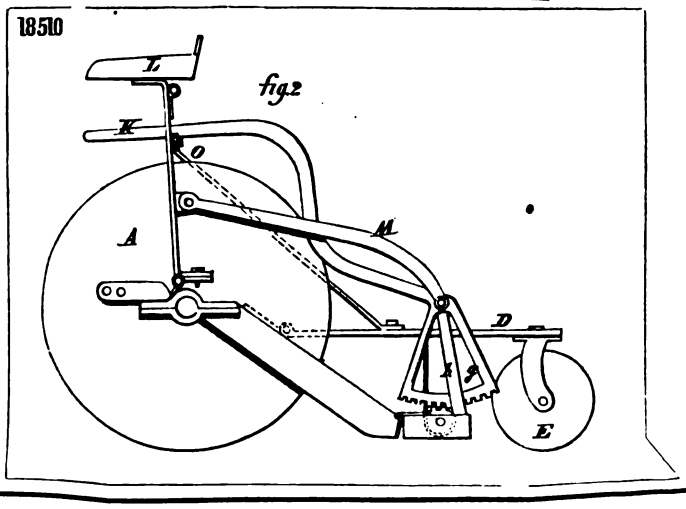

18800

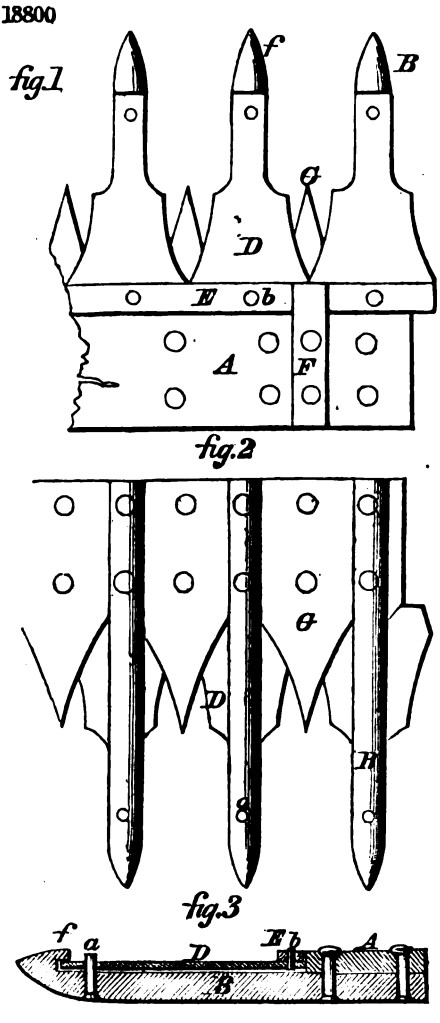

16930

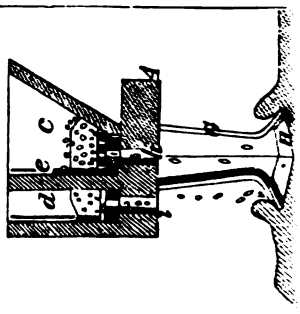

17205

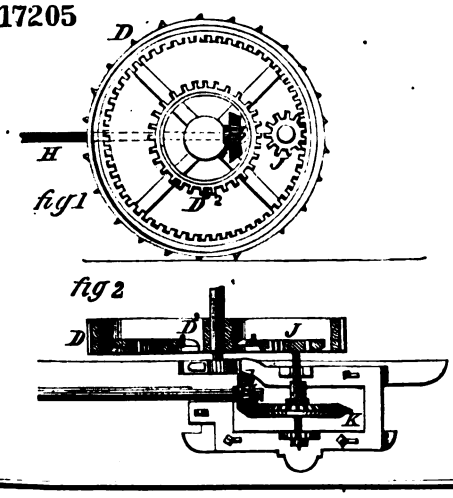

17964

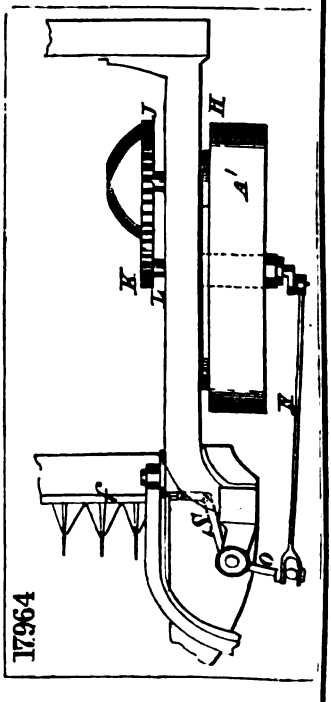

18363

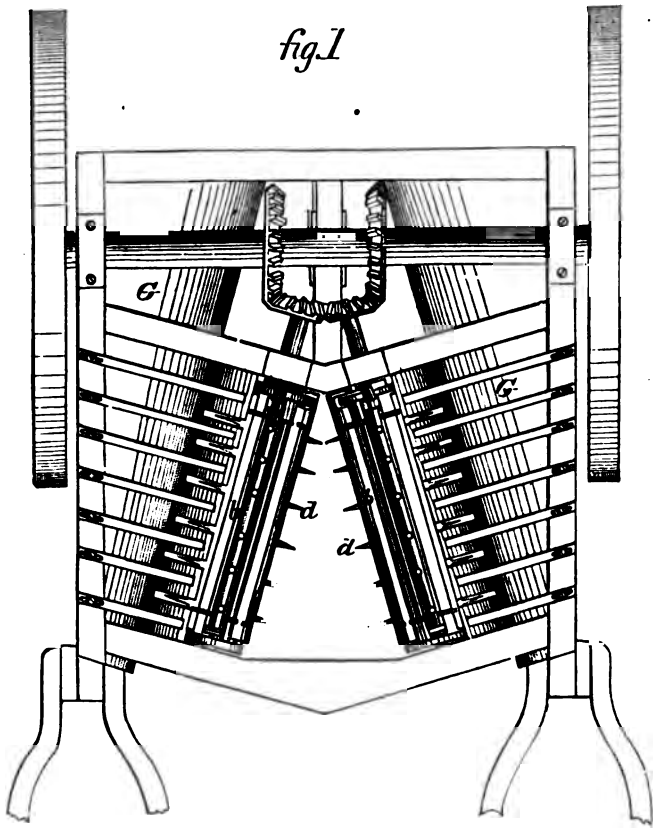

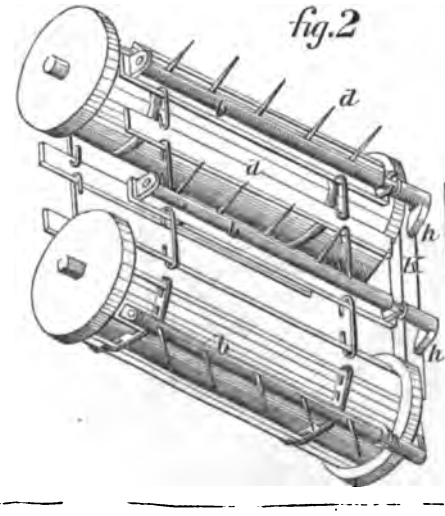

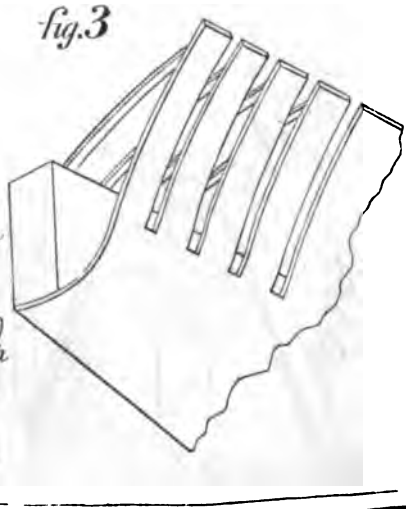

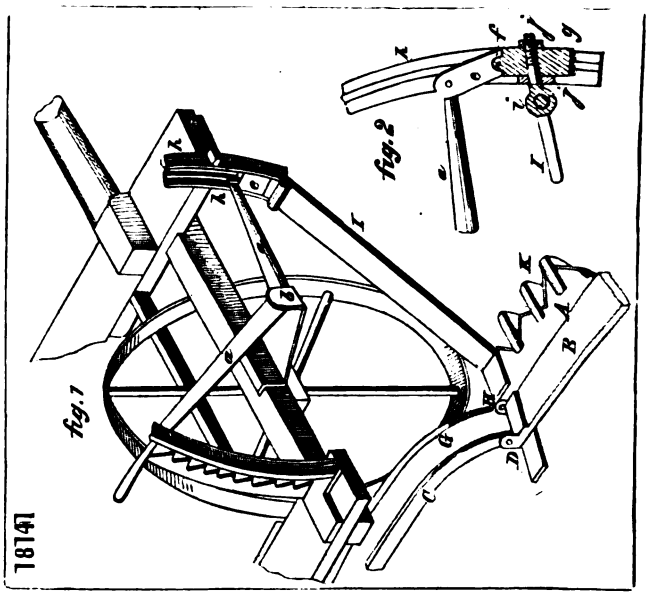
18141
fig.1
fig.2

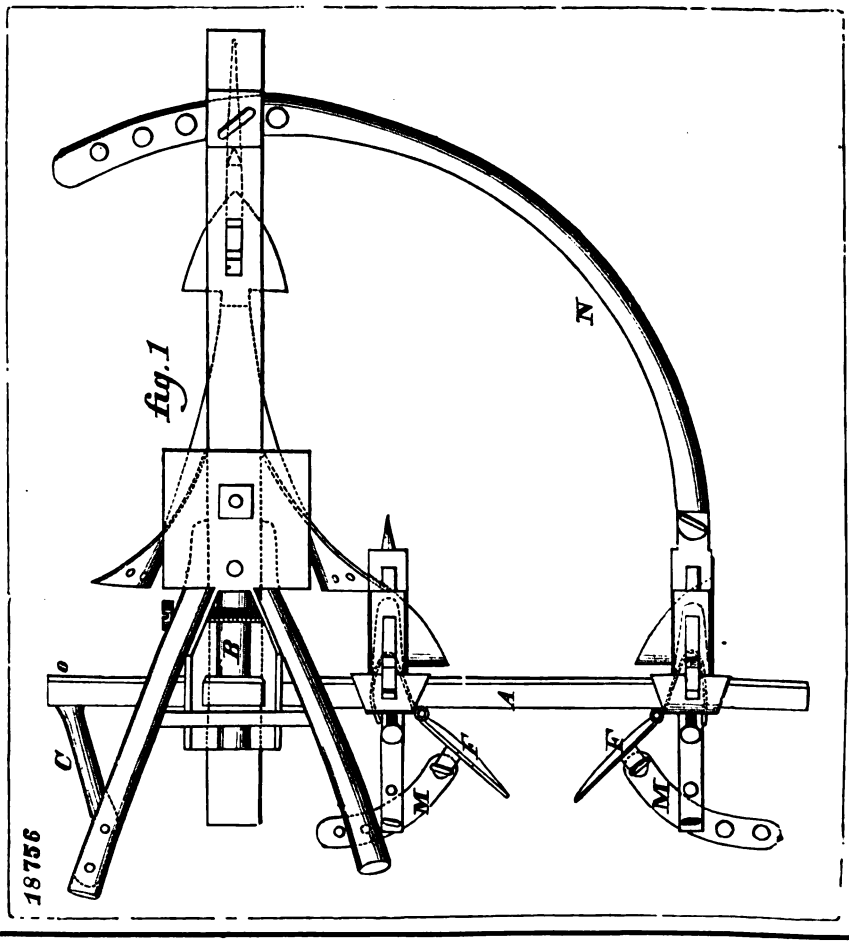
18756
fig.1

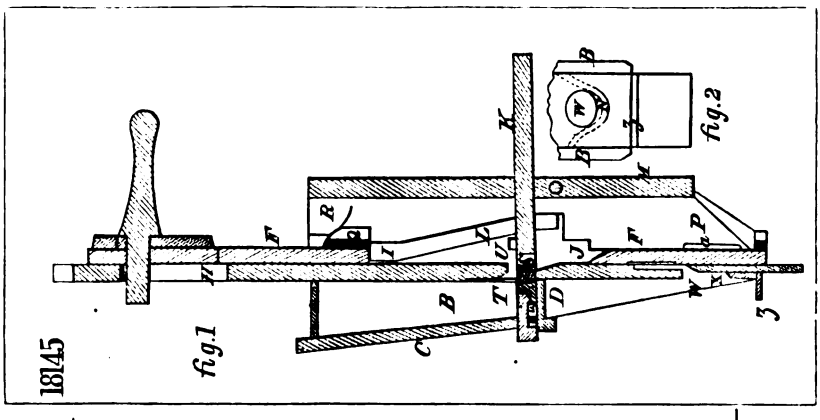
18145
fig.1
fig.2

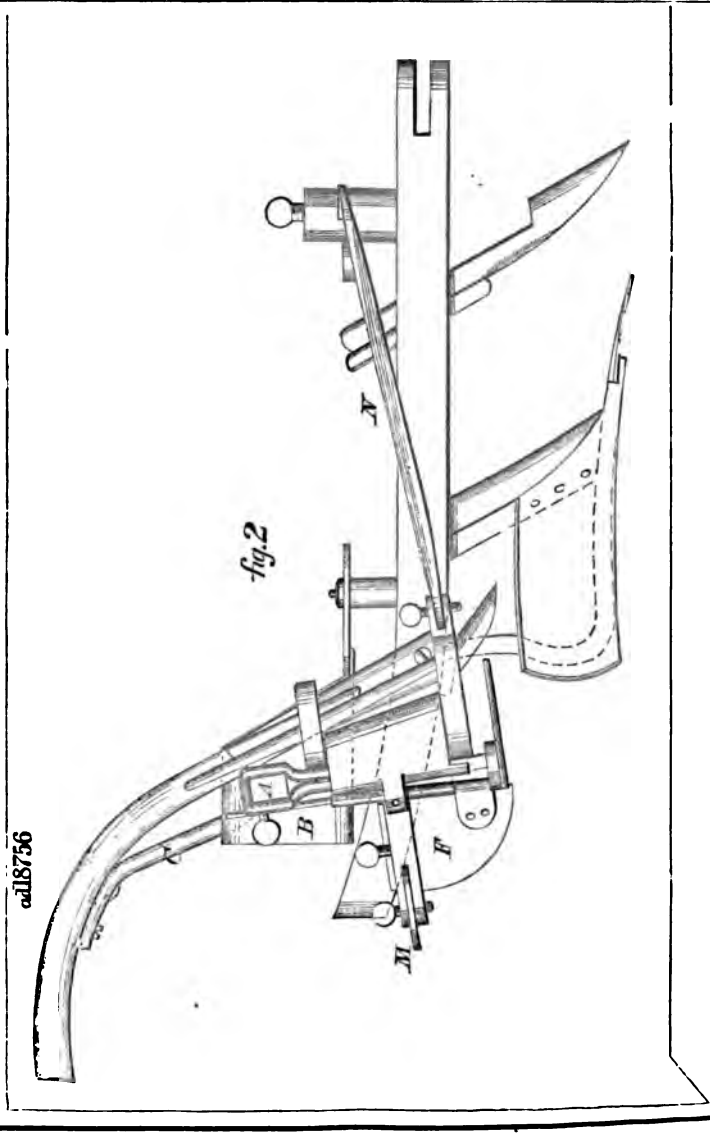
a18756
fig.2

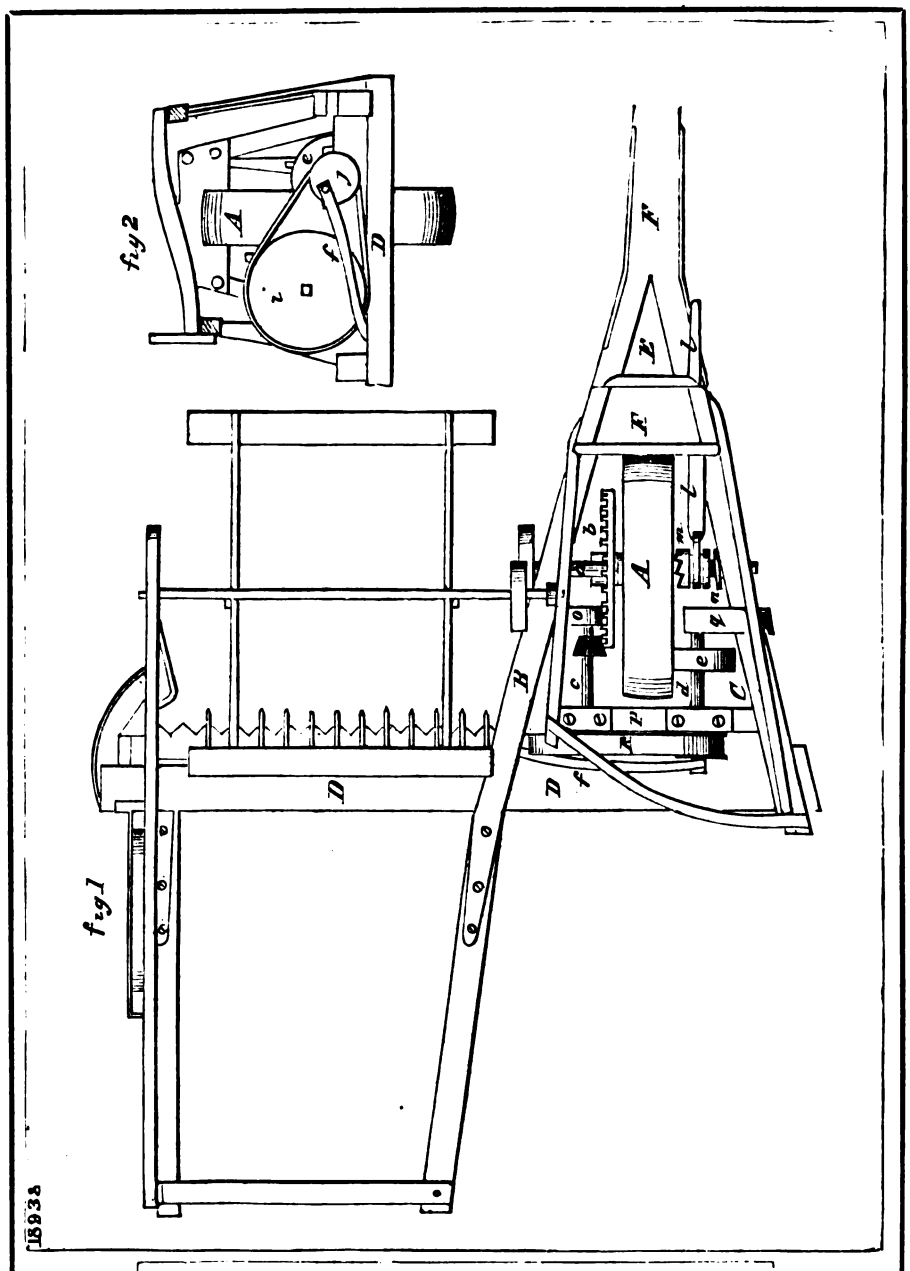
fig 2
fig 1
15938

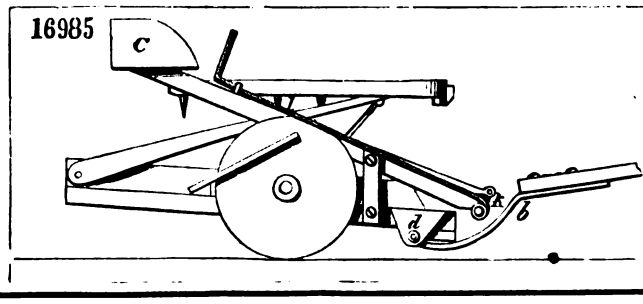
16985
c
A
b
d

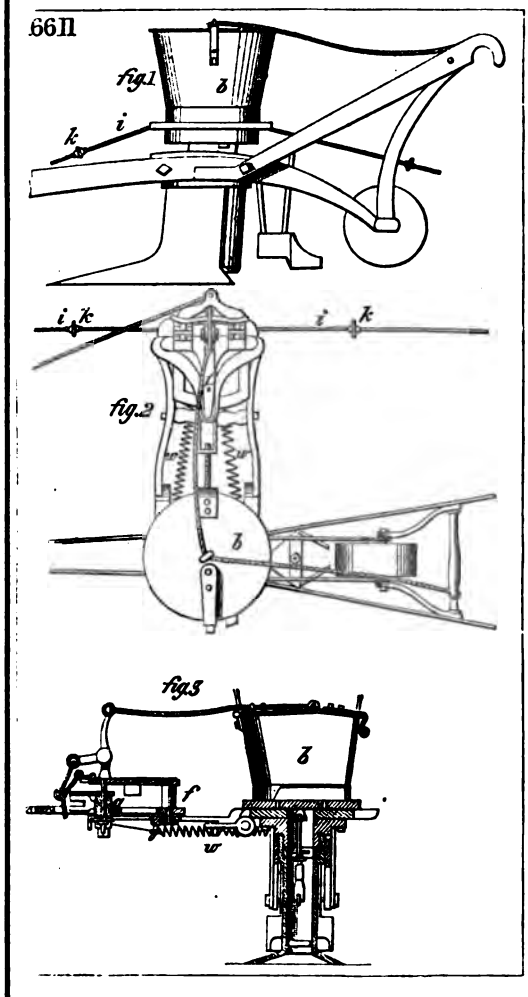
6611
fig.1
fig.2
fig.3

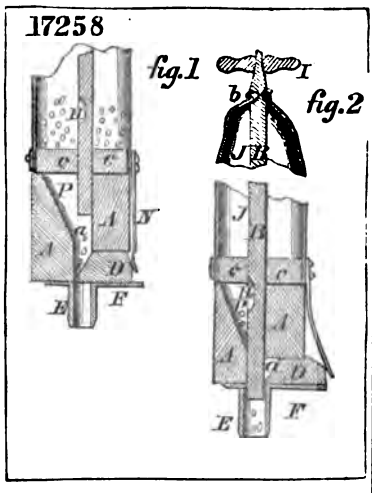
17258
fig.1
fig.2

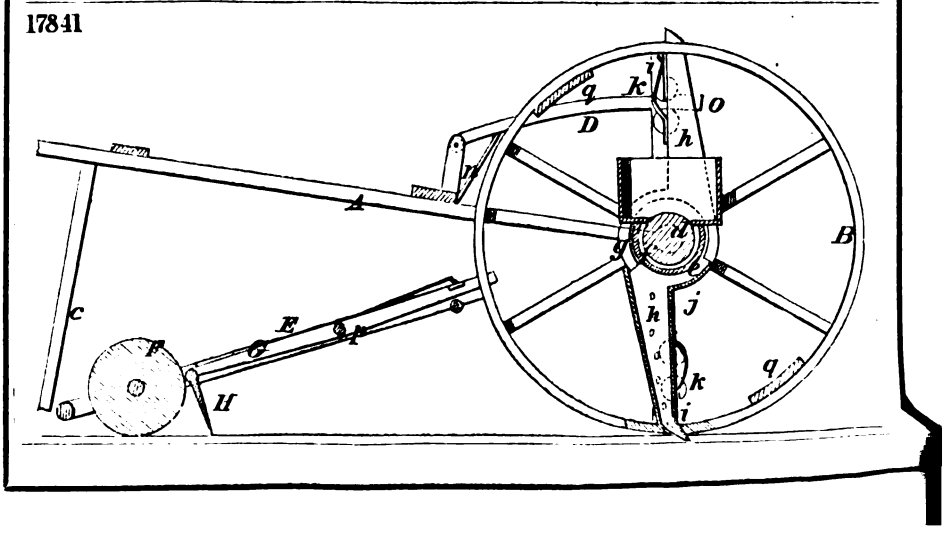
17841

16551

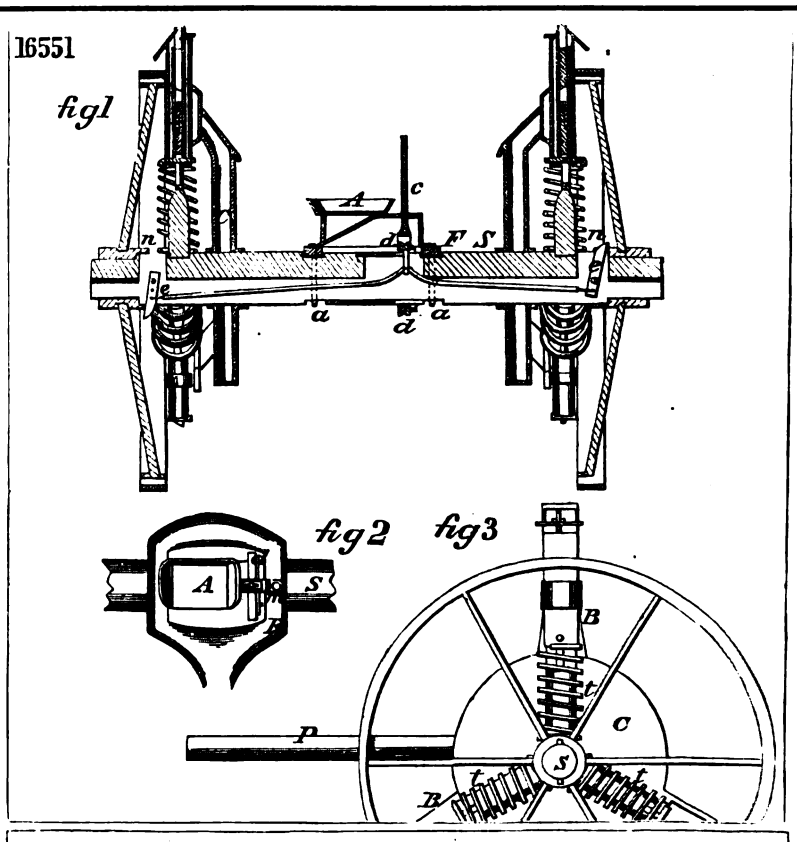
fig1
A
c
d
F
S
n
e
a
d
a
fig2
A
S
fig3
B
t
C
p
S
t
B

18508

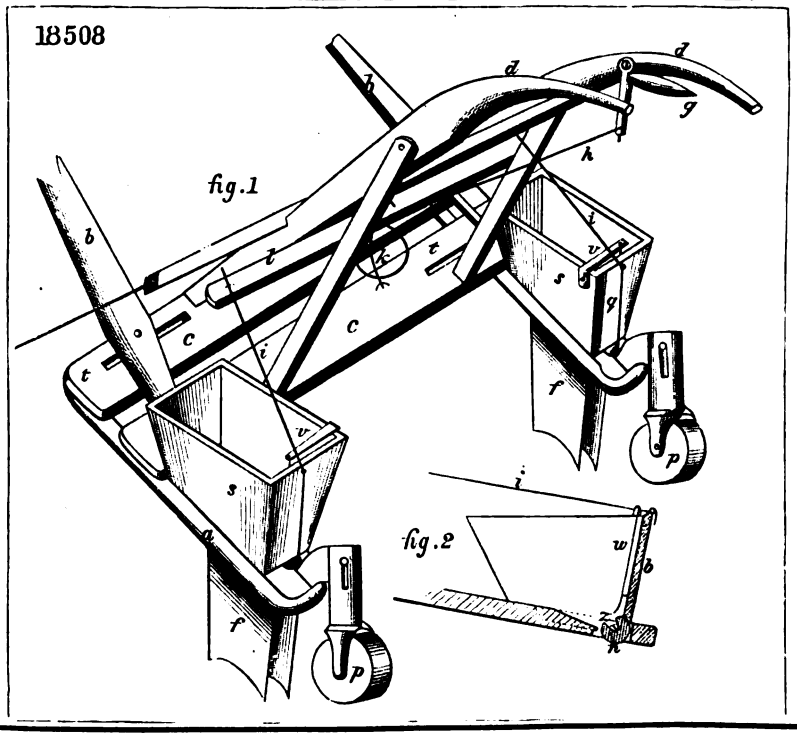
fig.1
b
d
d
g
h
t
c
t
c
c
t
i
v
s
q
f
p
v
s
f
p
fig.2
i
w
b
k

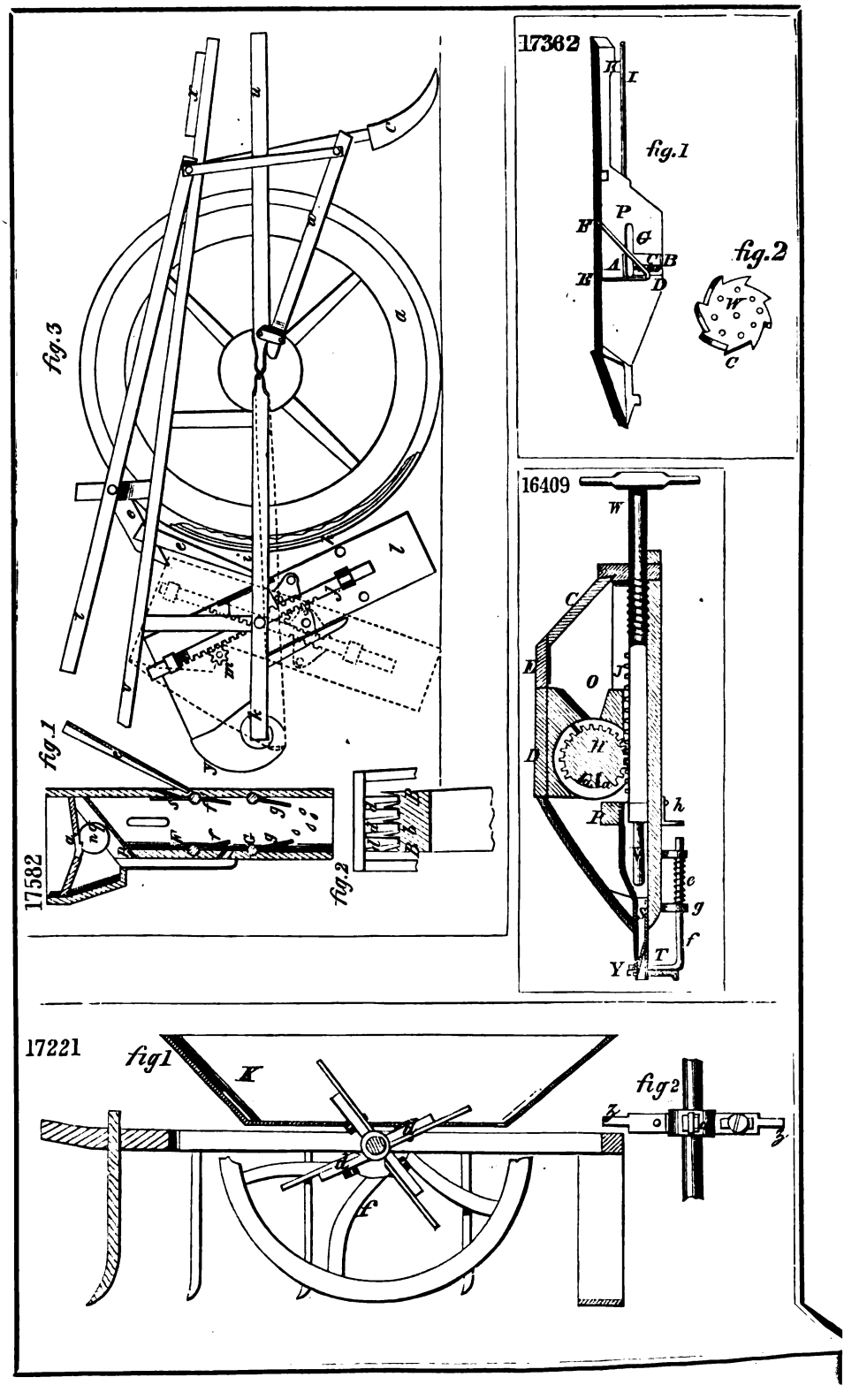
17582
fig.1
fig.2
fig.3
17362
fig.1
fig.2
16409
17221
fig1
fig2

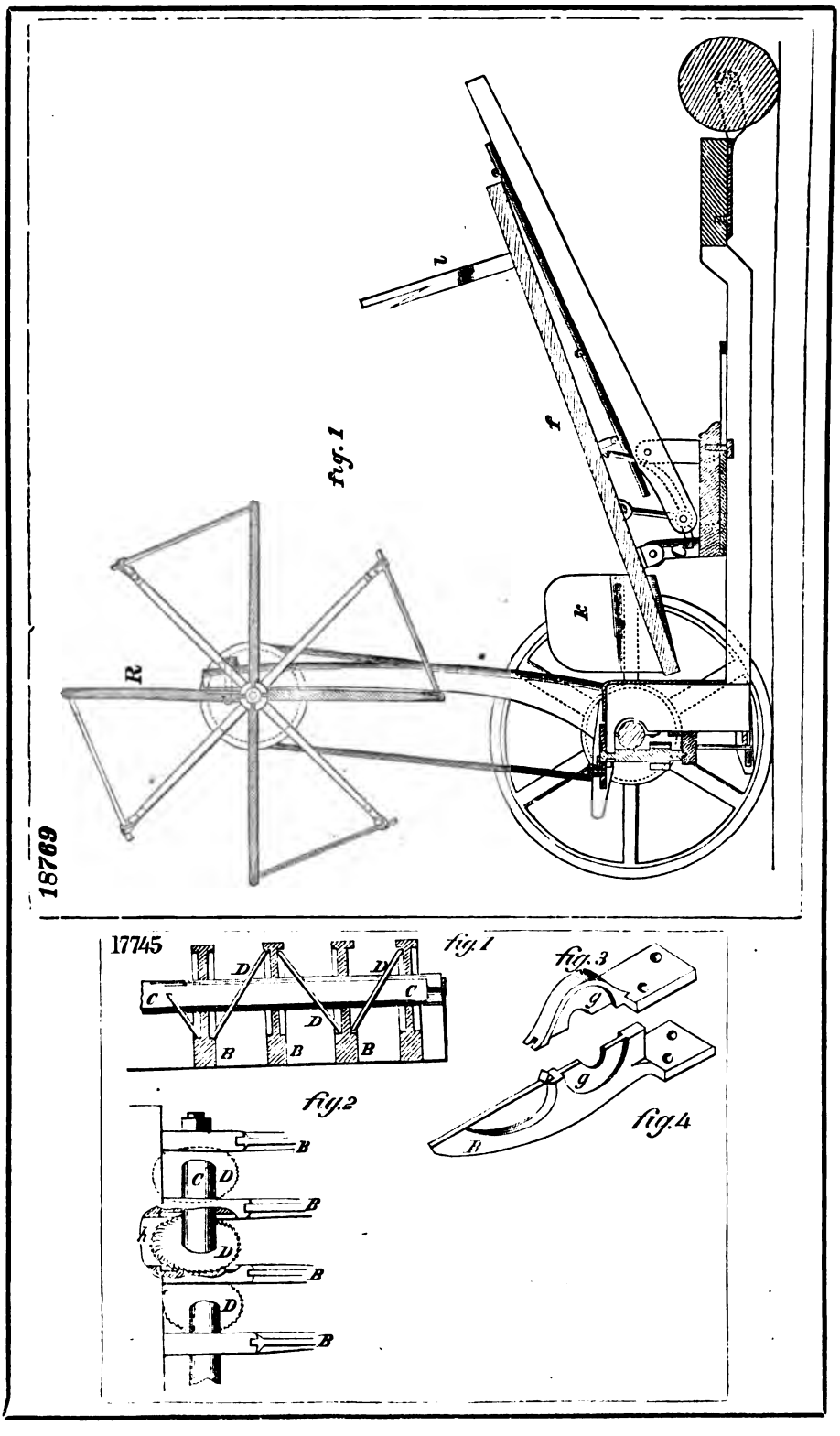
18769
fig. 1
R
k
f
r
17745
fig. 1
fig. 2
fig. 3
fig. 4
C
D
B
g
R

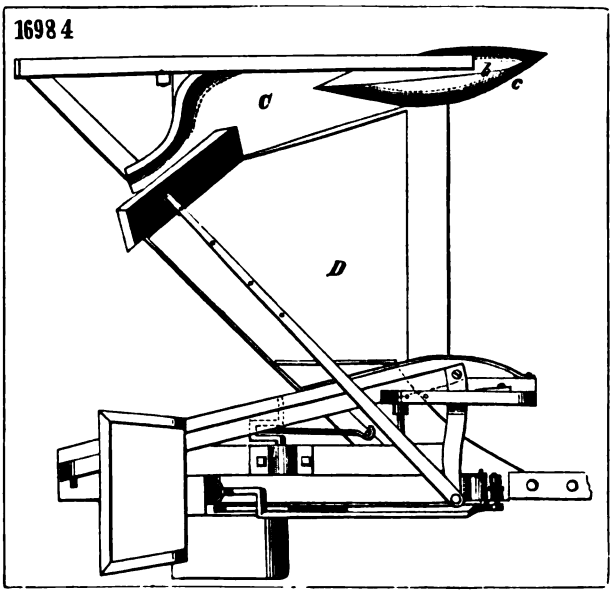
16984
C
b
c
D

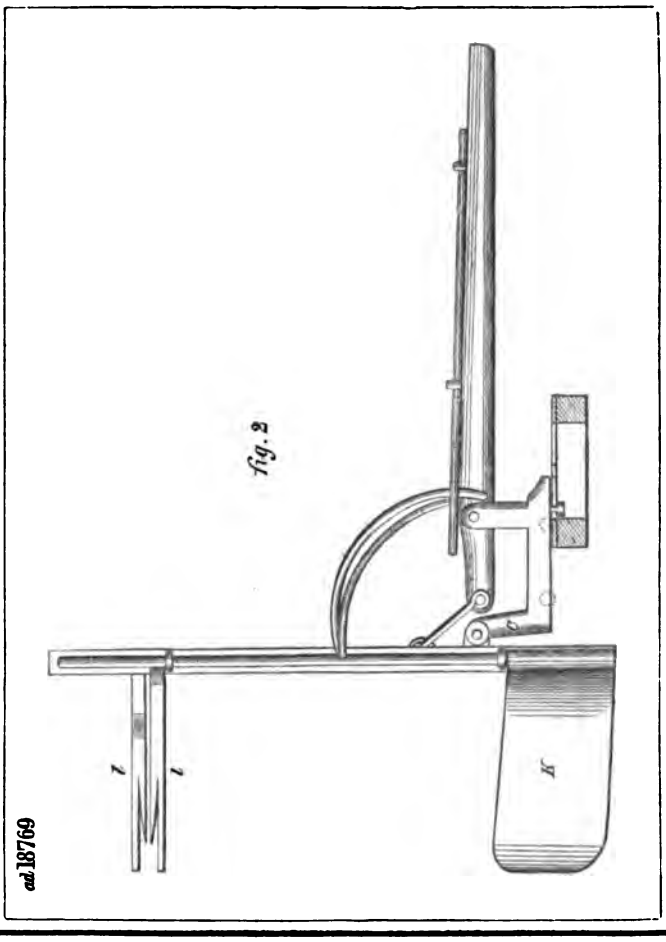
fig. 2
ad 18769
1
1
K

18798

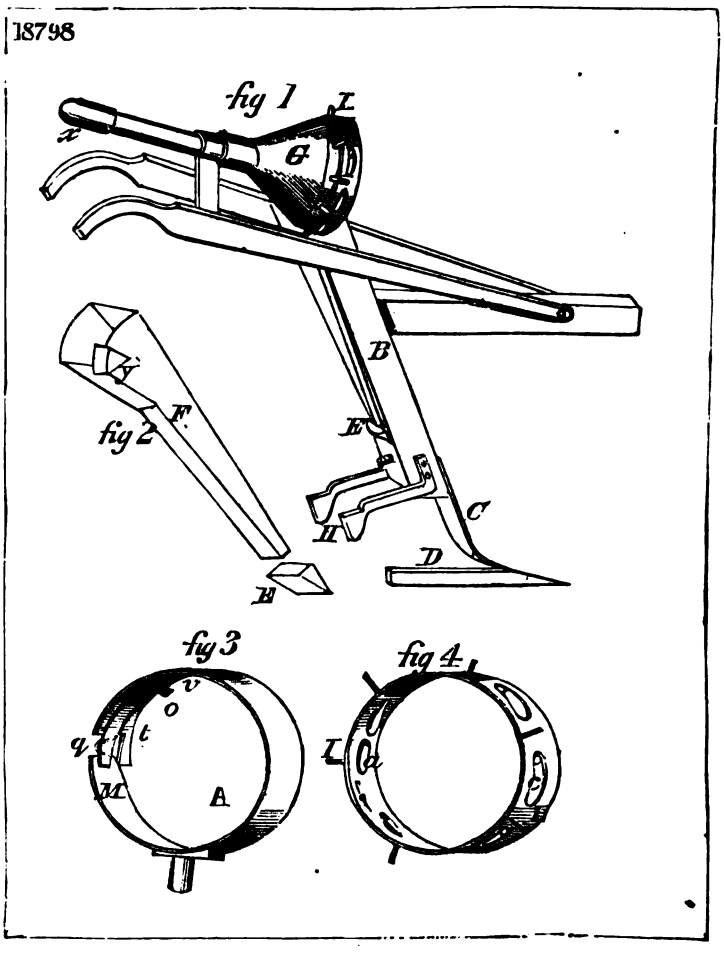

16636

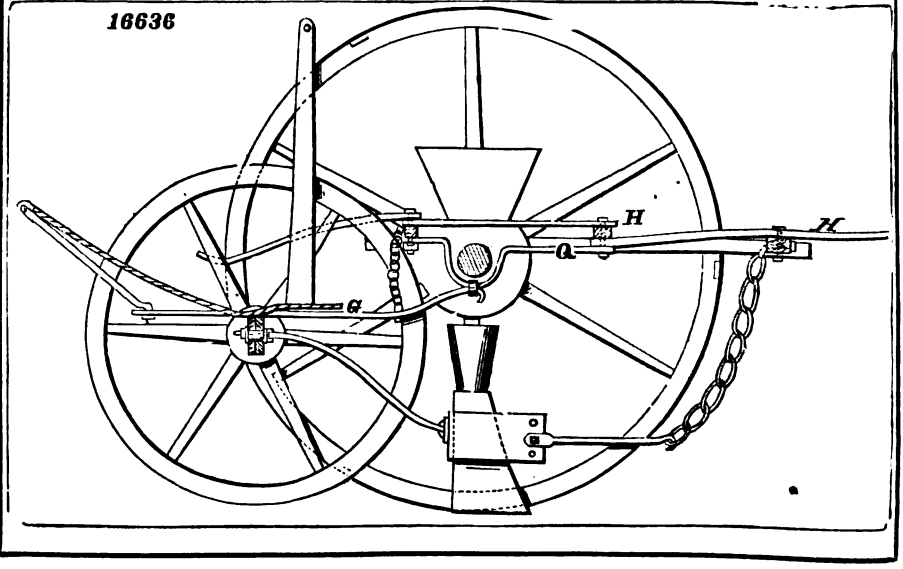

17080

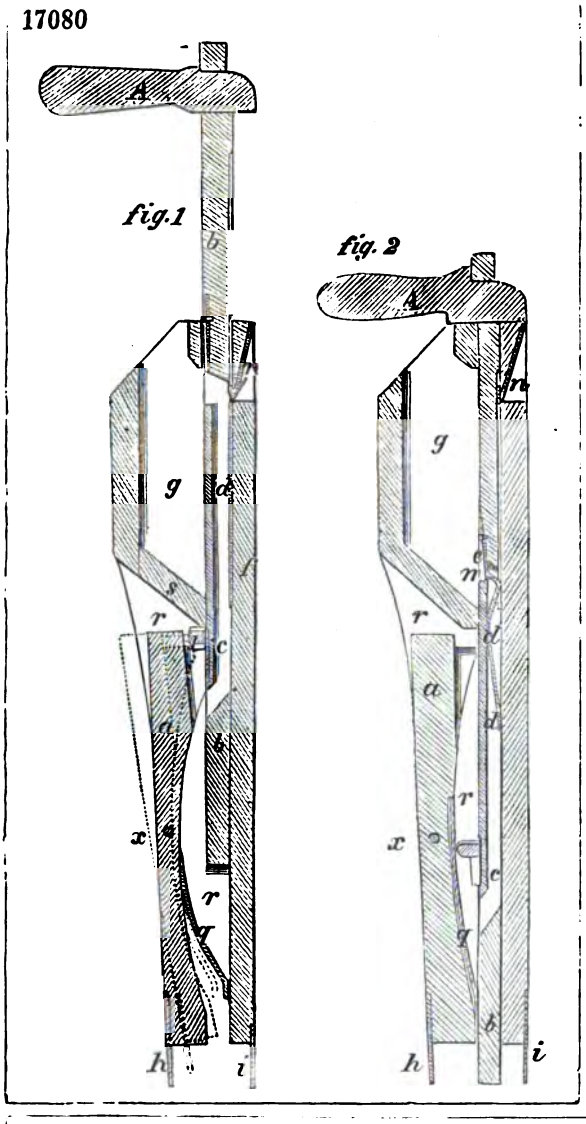

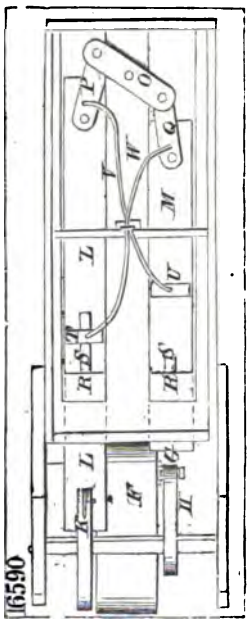

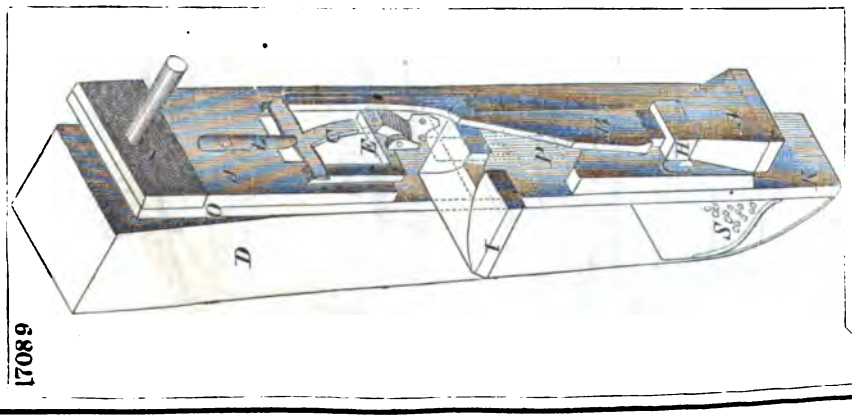

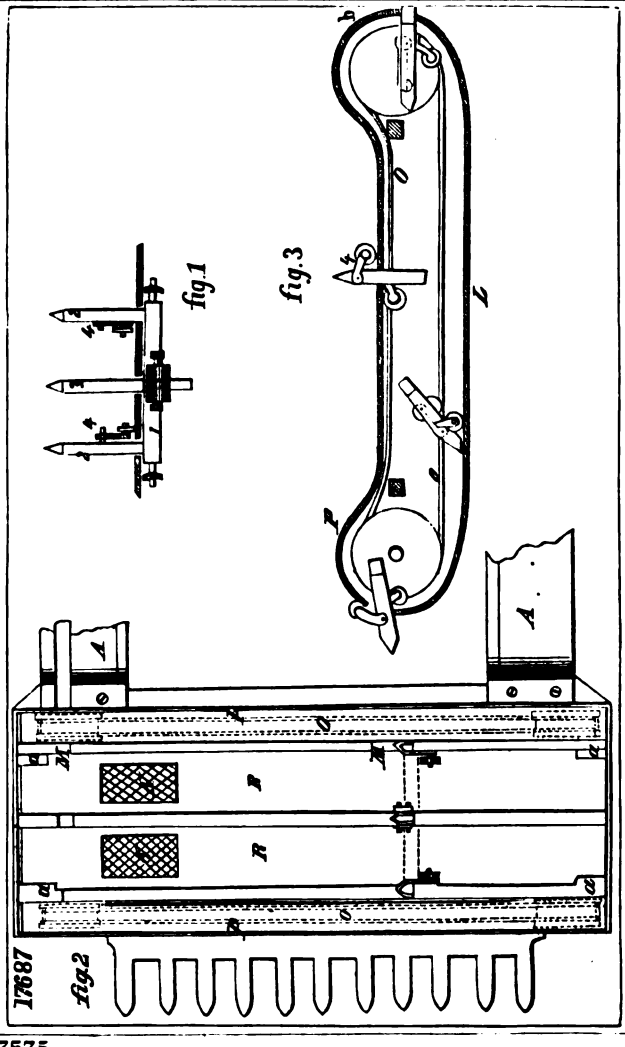
fig.1
fig.3
A
A
R
R
S
17687
fig.2

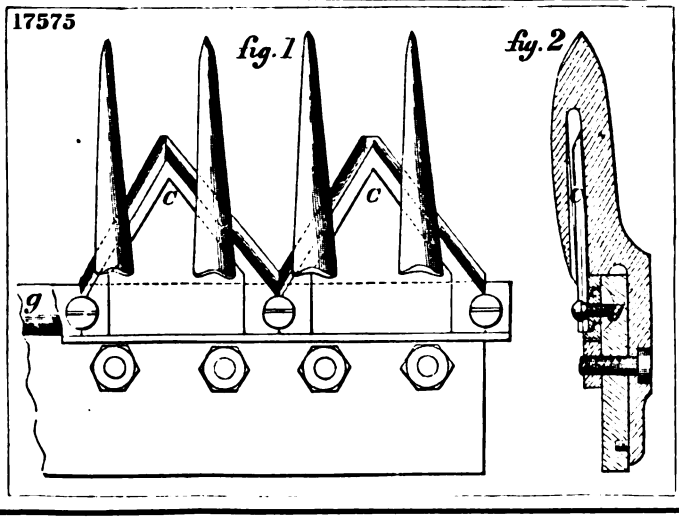
17575
fig.1
fig.2
c
c
g

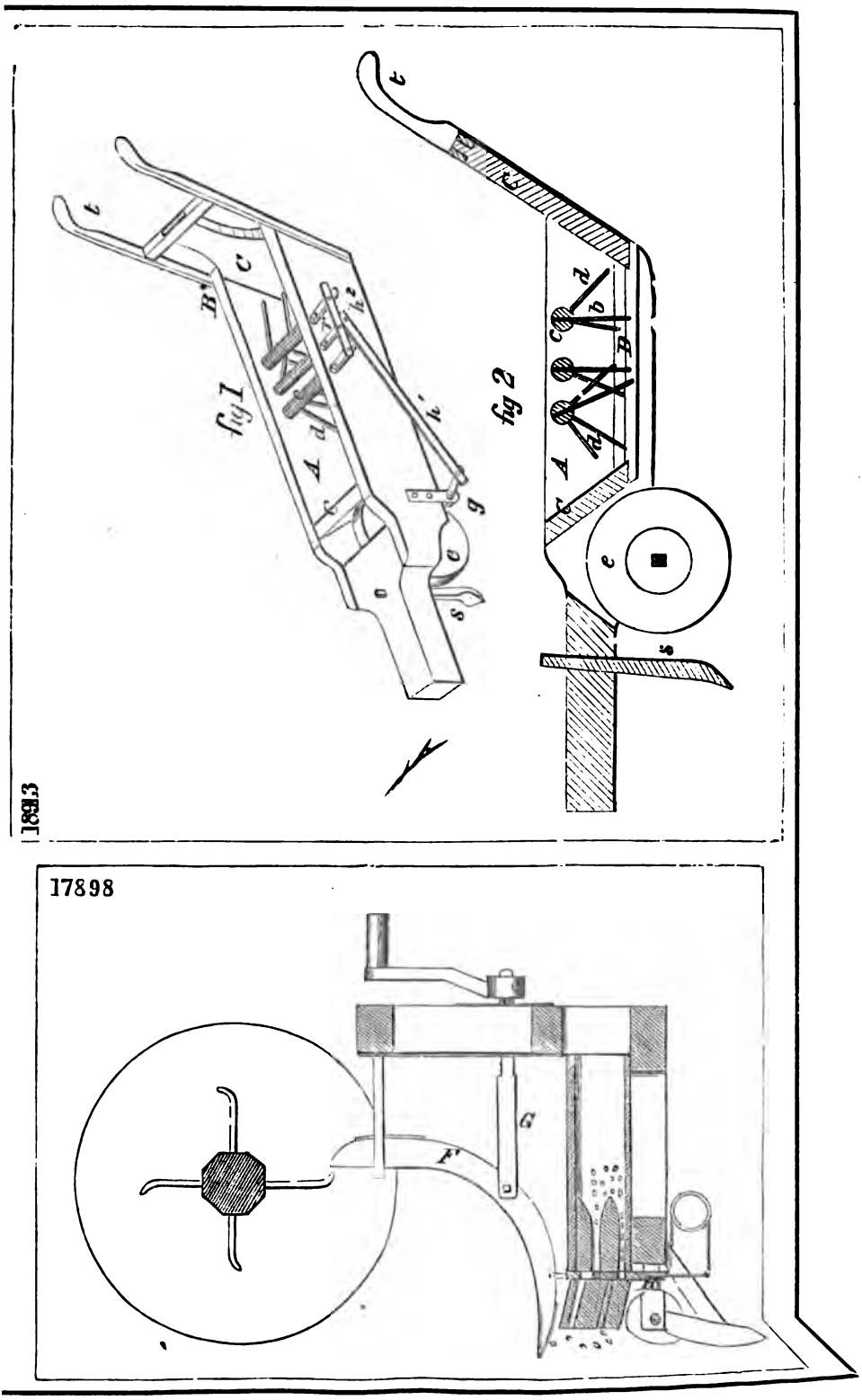
18913
fig I
fig 2
17898

16836

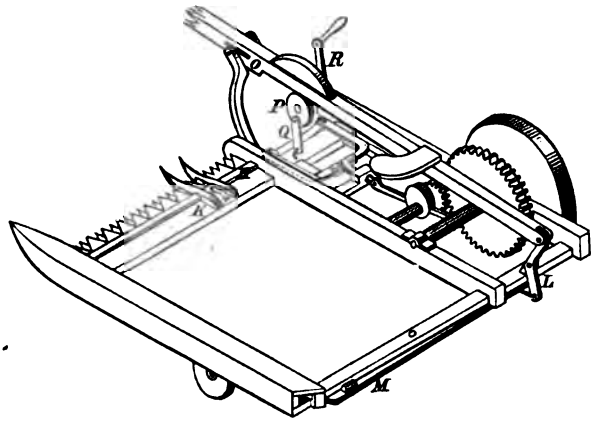

18747

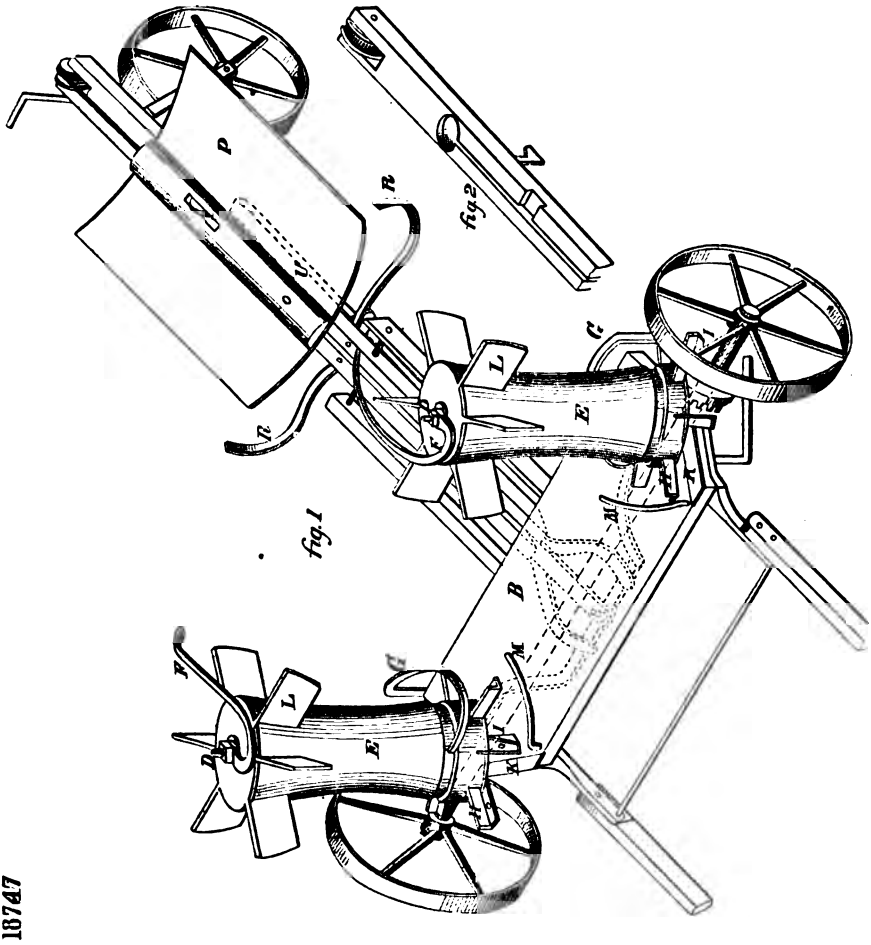

16610

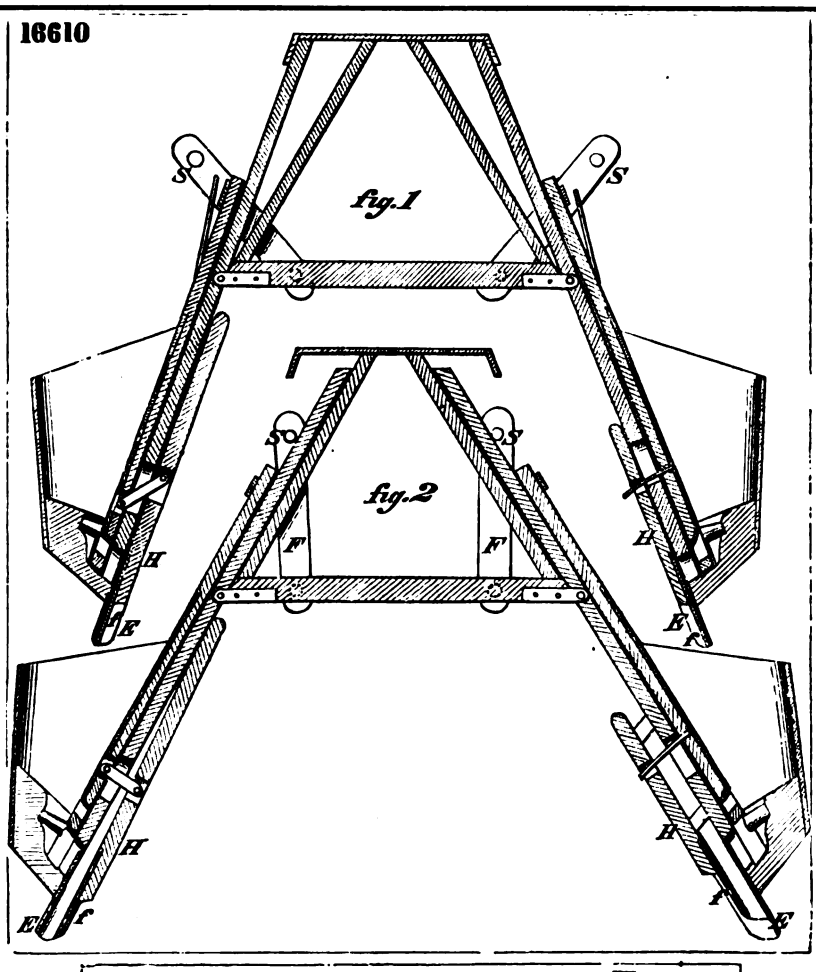

18140

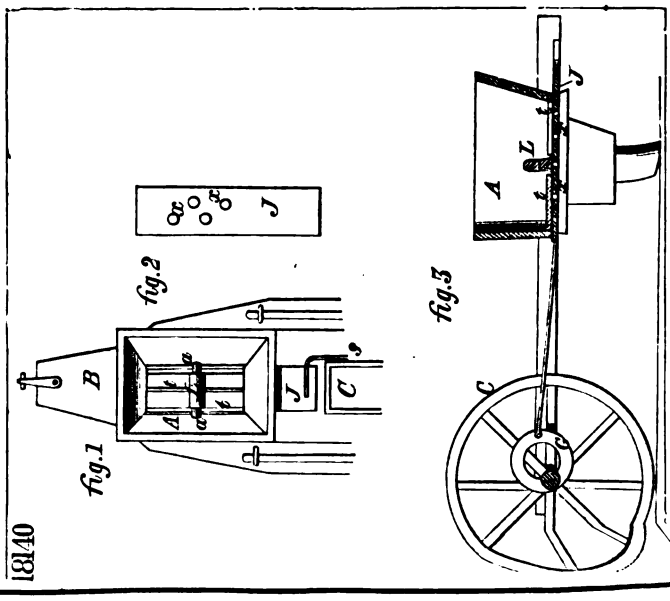

18961

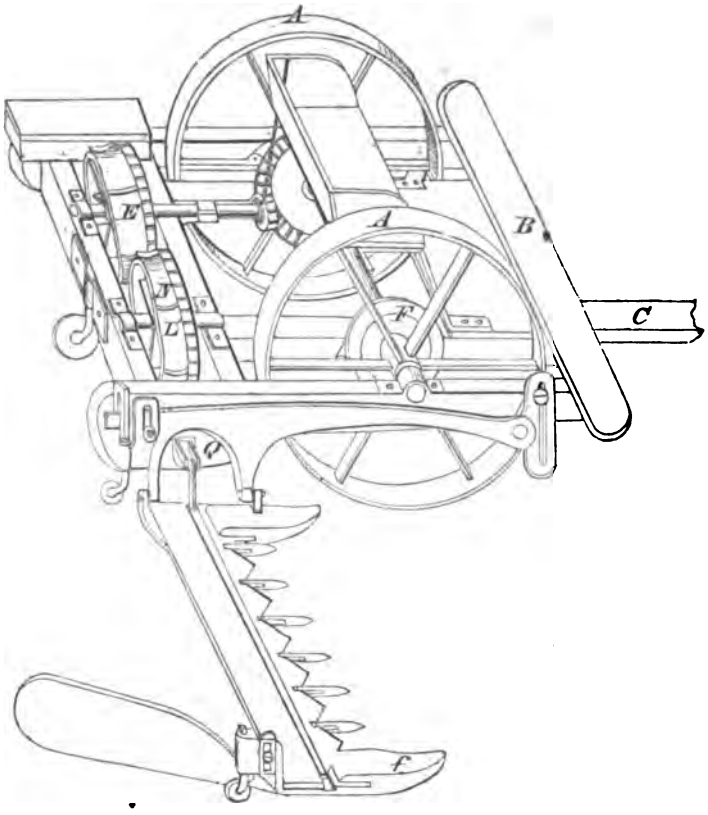

16619

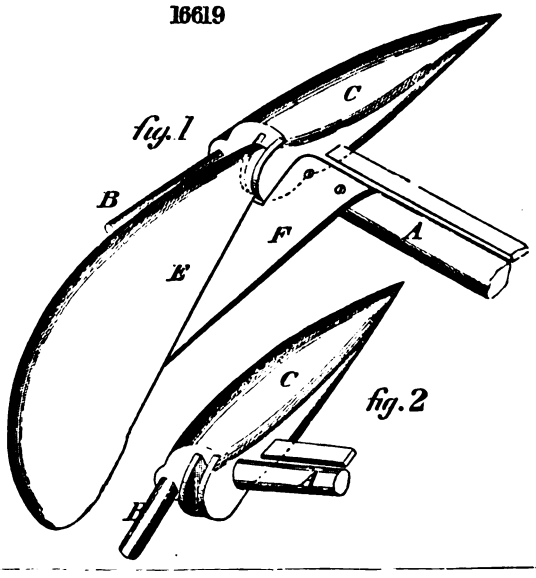

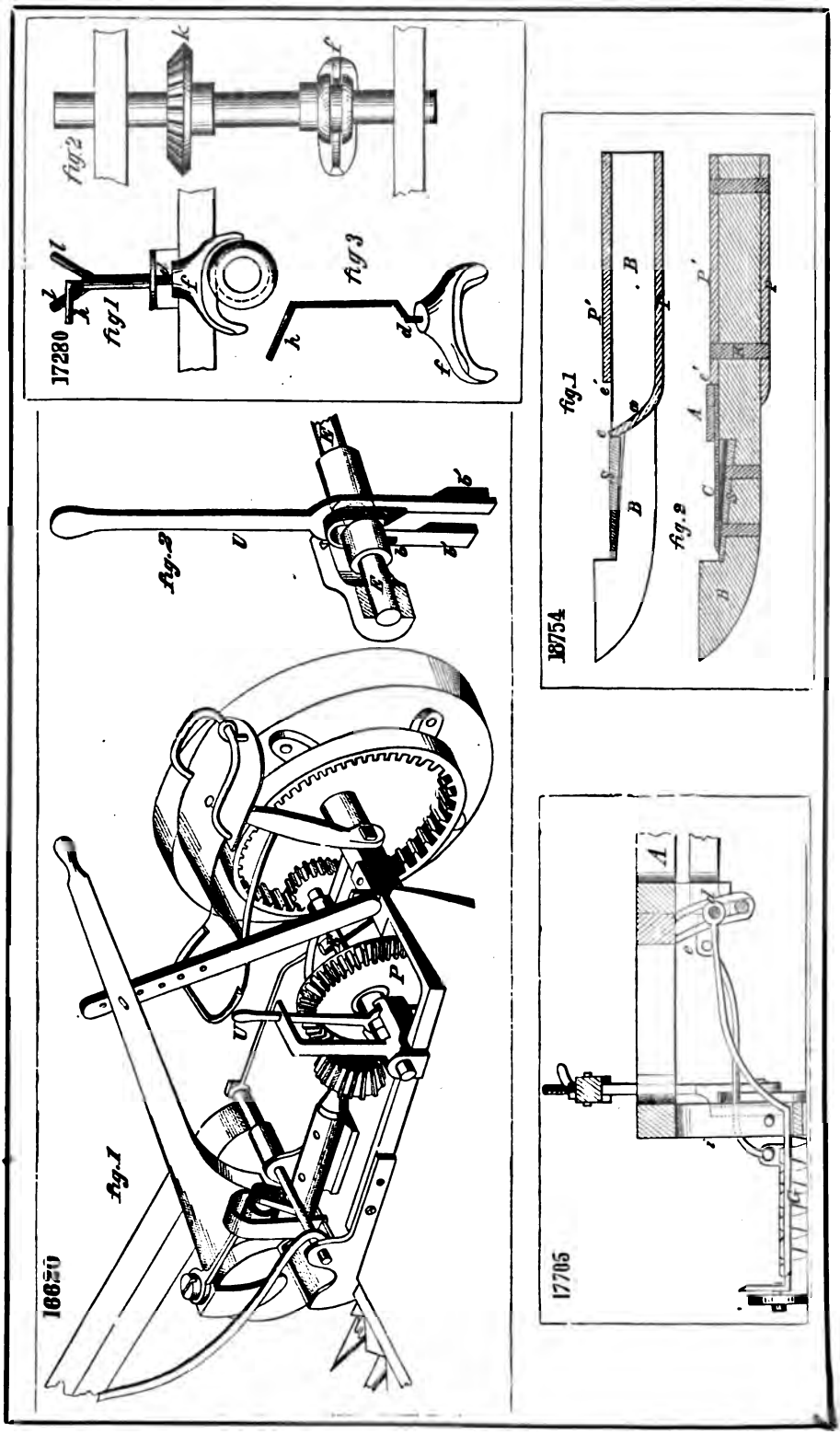
17280
fig.1
fig.2
fig.3
16820
fig.1
fig.2
fig.3
18754
fig.1
fig.2
17705

18256

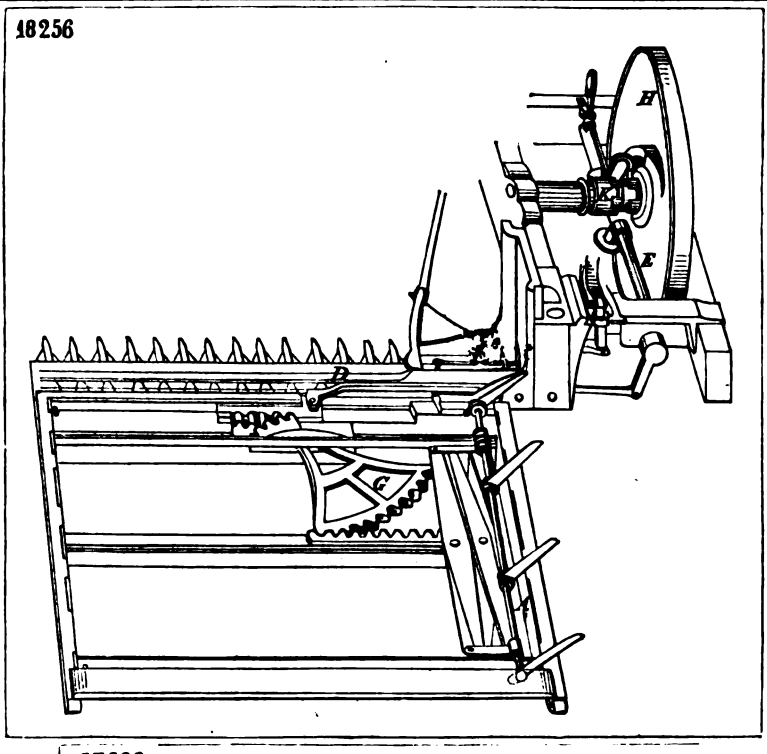

17690

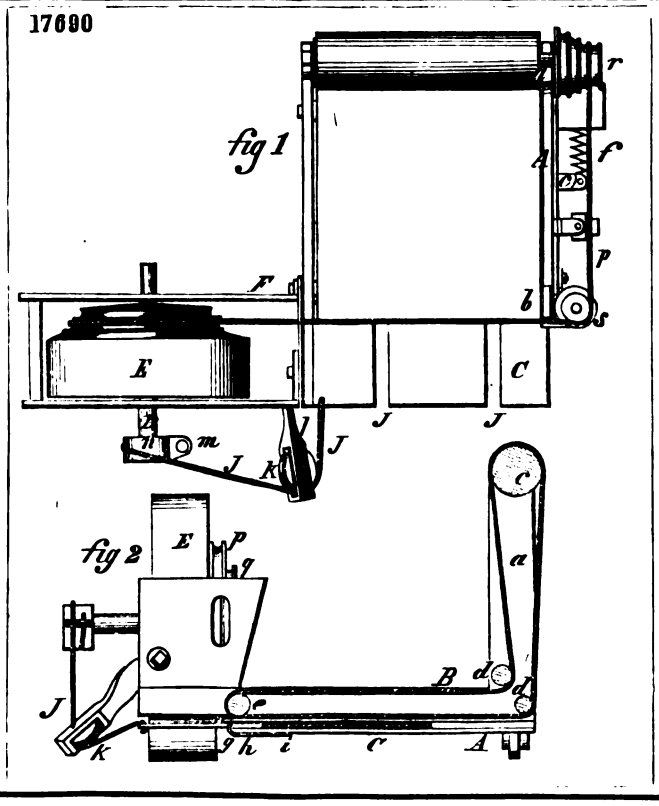

18450

fig.1

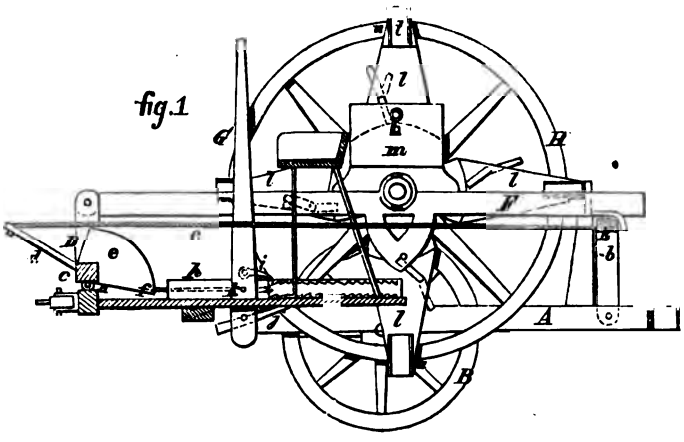

fig.3

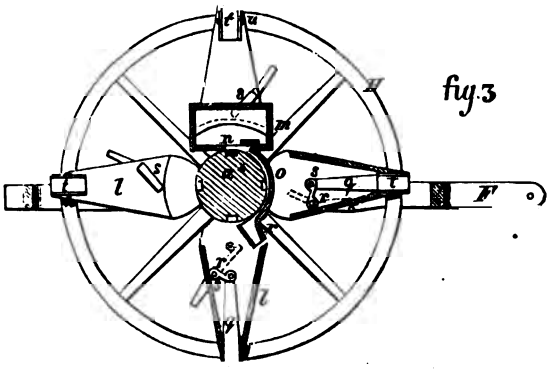

fig.2

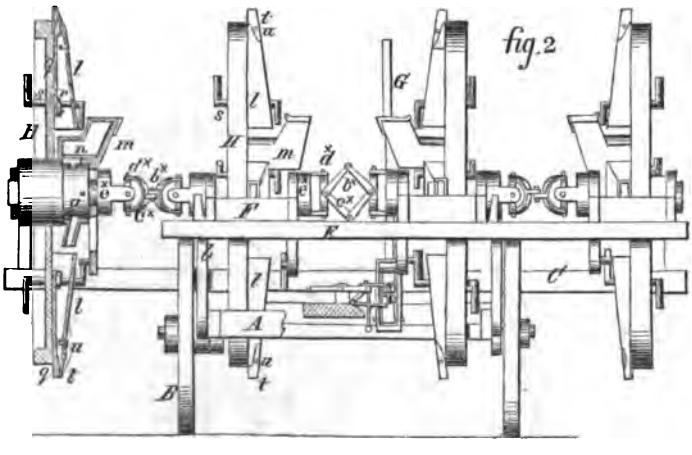

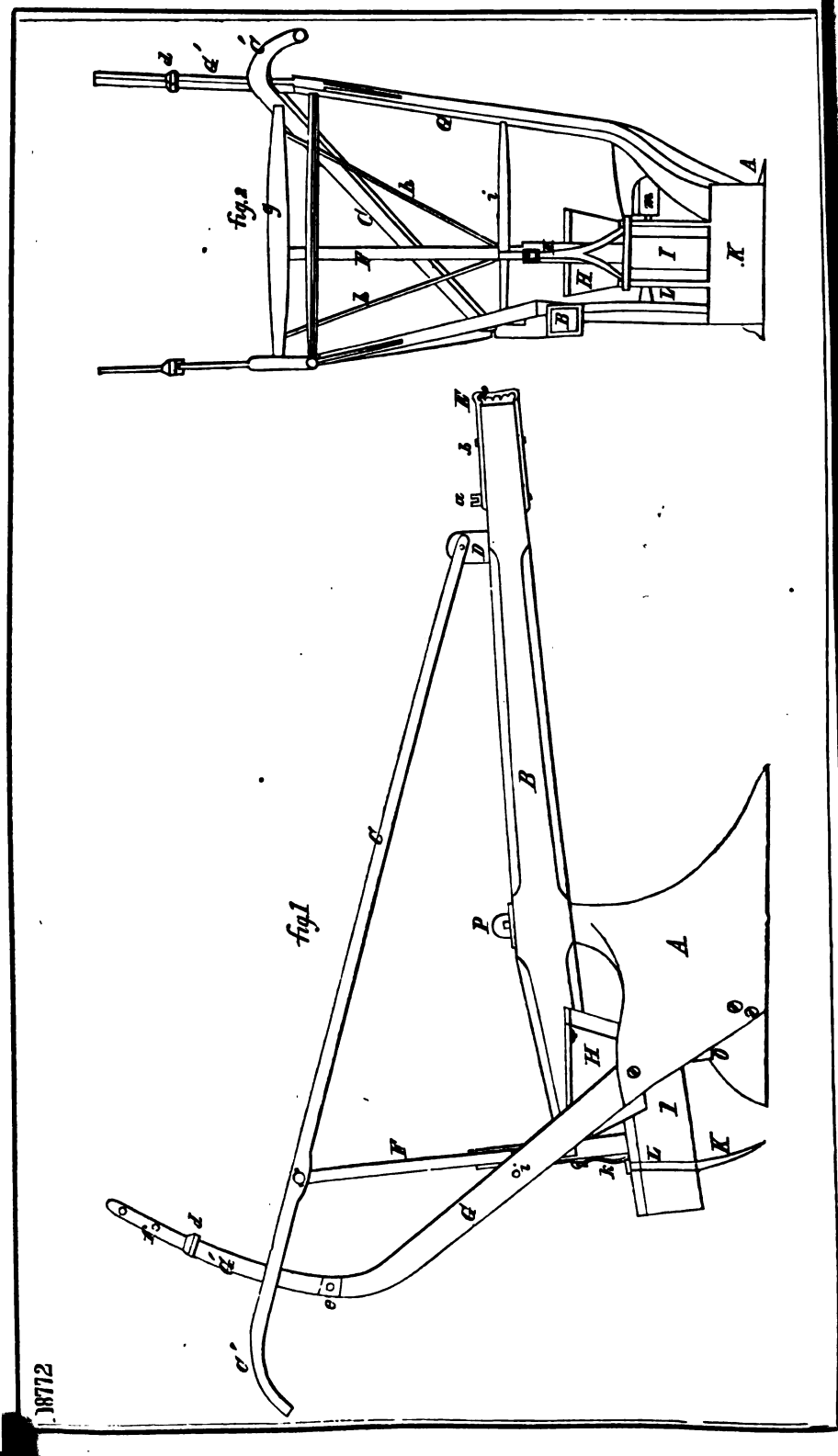

18772

18525

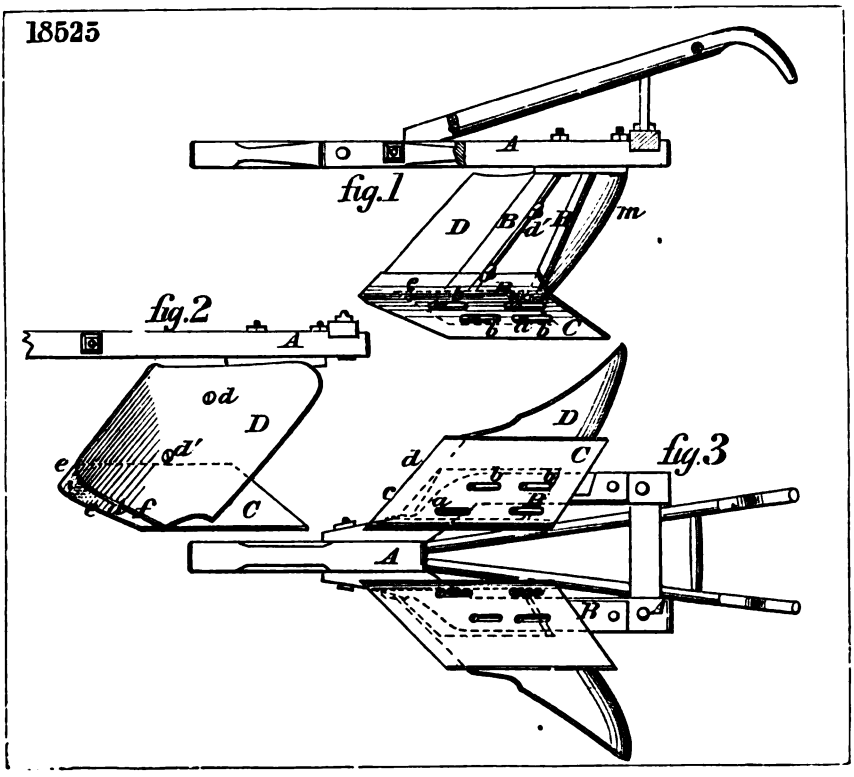

18716

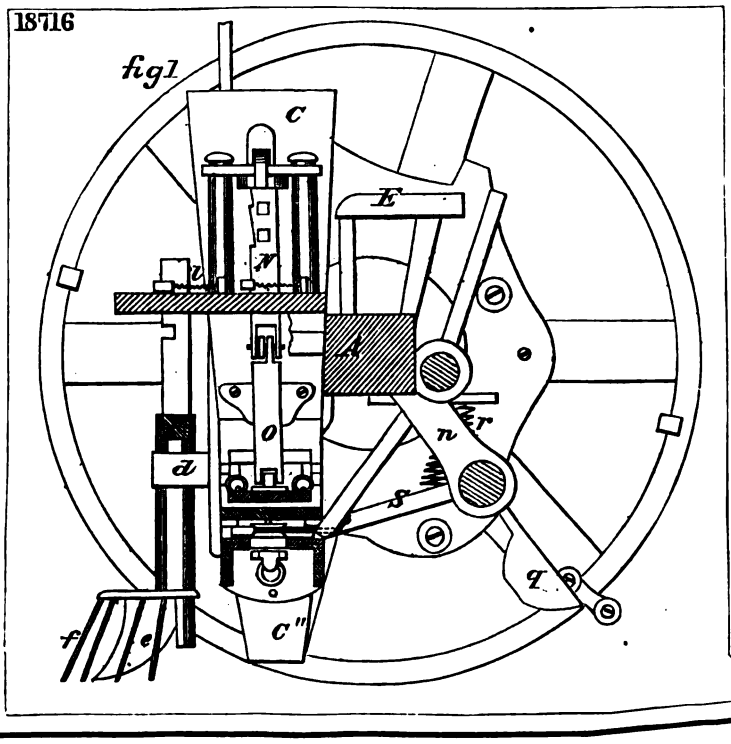

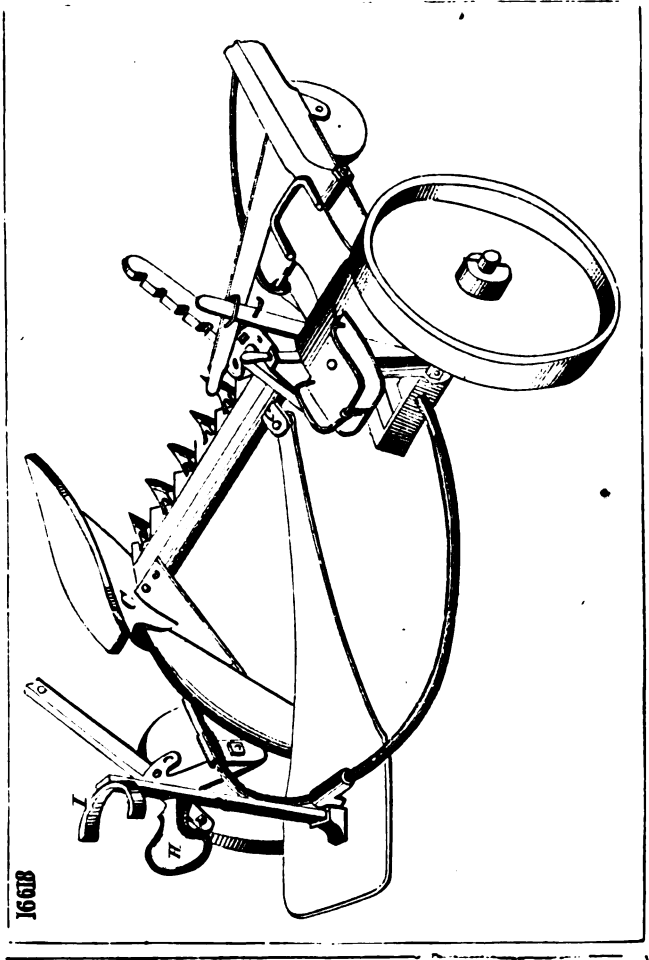
16618
I
H
C

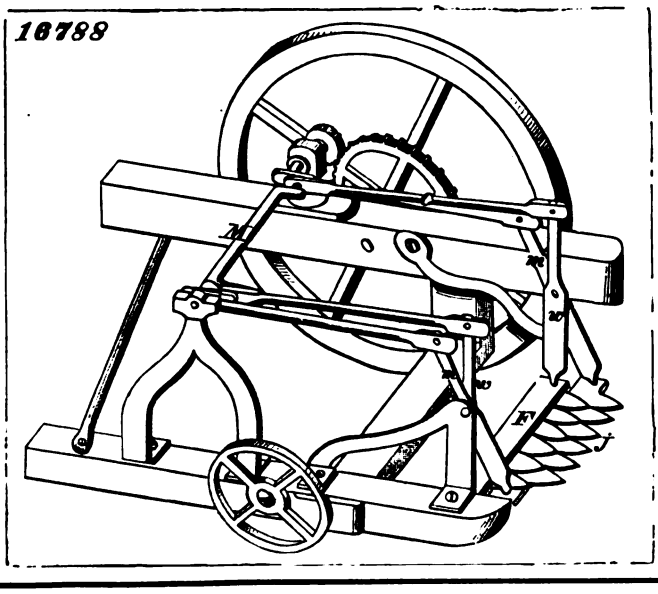
16788
M
F

18393

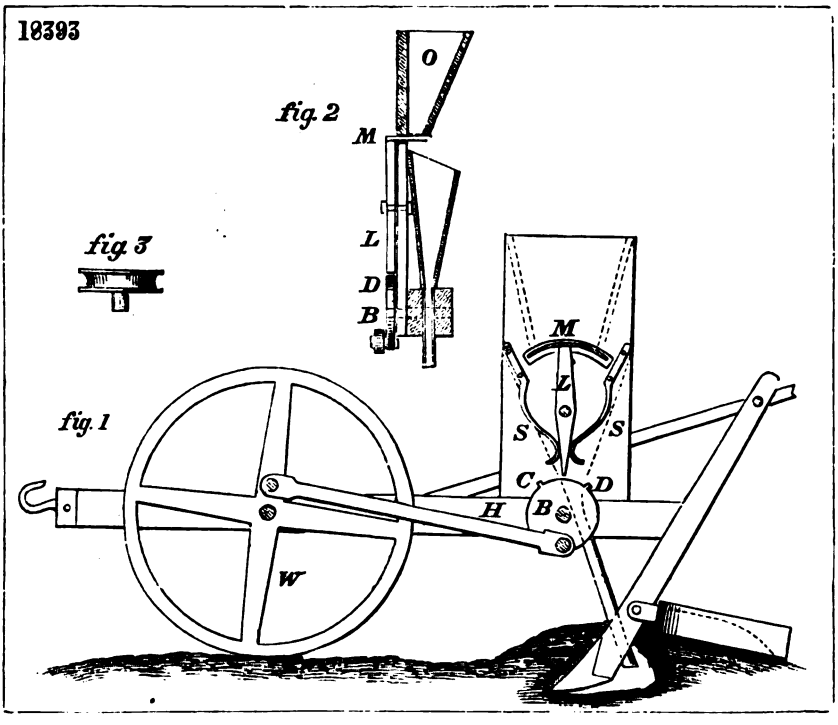

18333

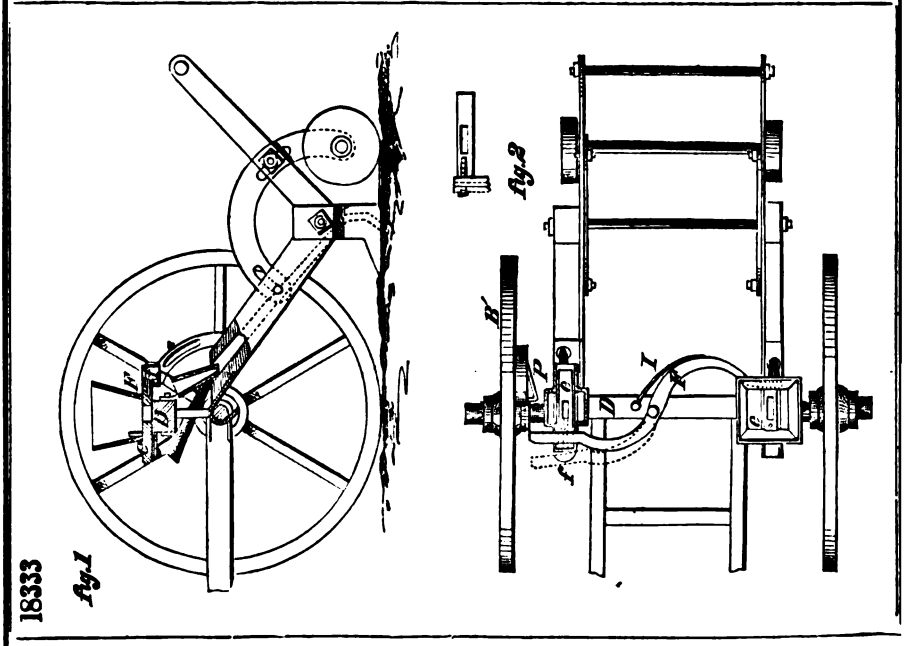

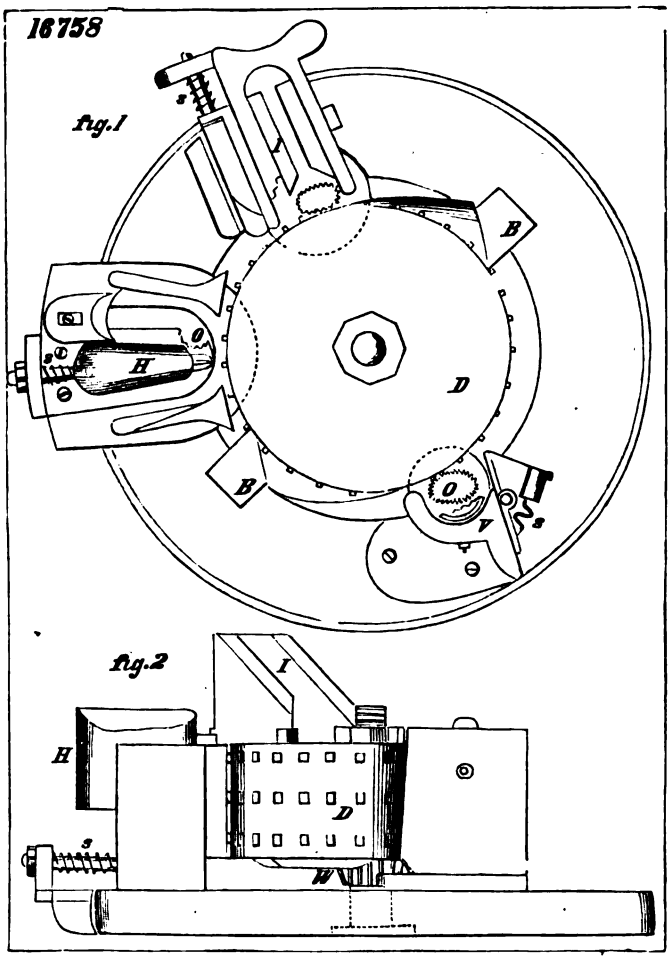
16758
fig.1
I
B
H
D
B
O
V
fig.2
I
H
D
W

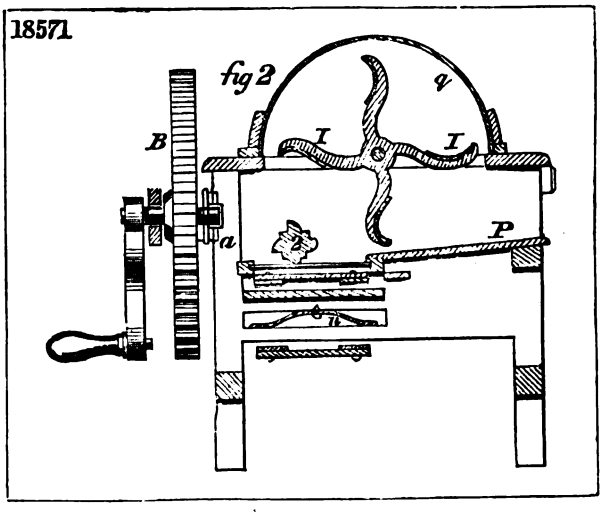
18571
fig 2
q
B
I
I
a
P

18846

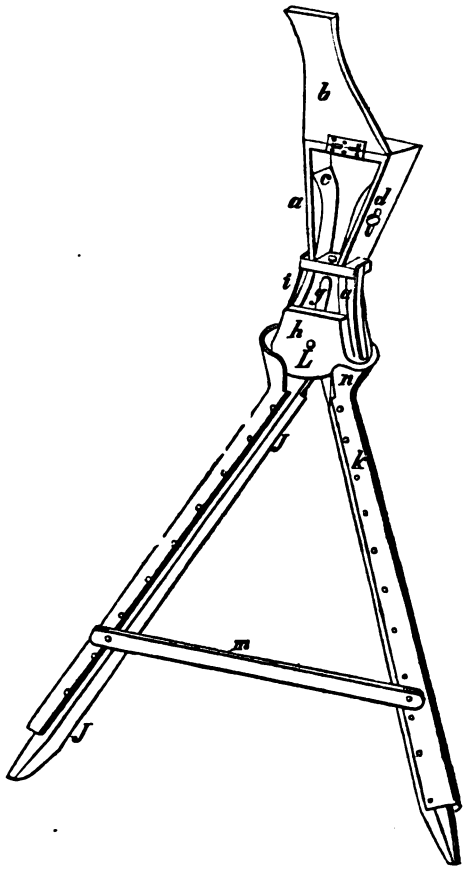

18366

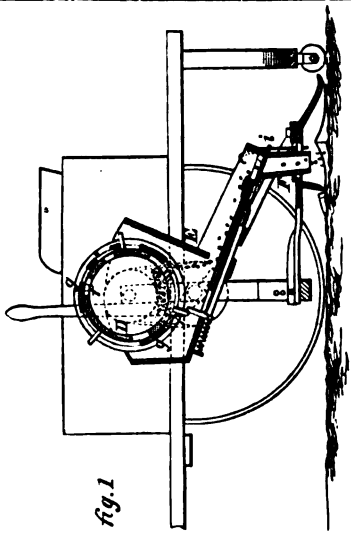

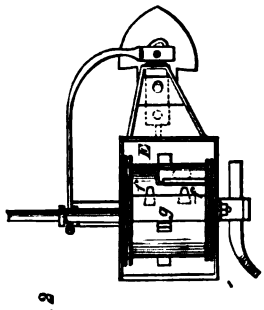

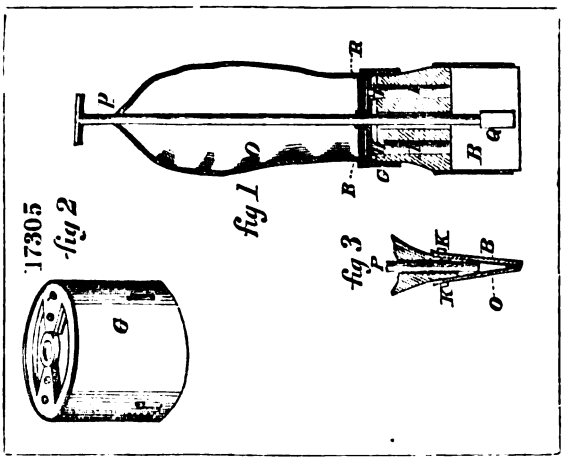
17305
fig 2
fig 1
fig 3

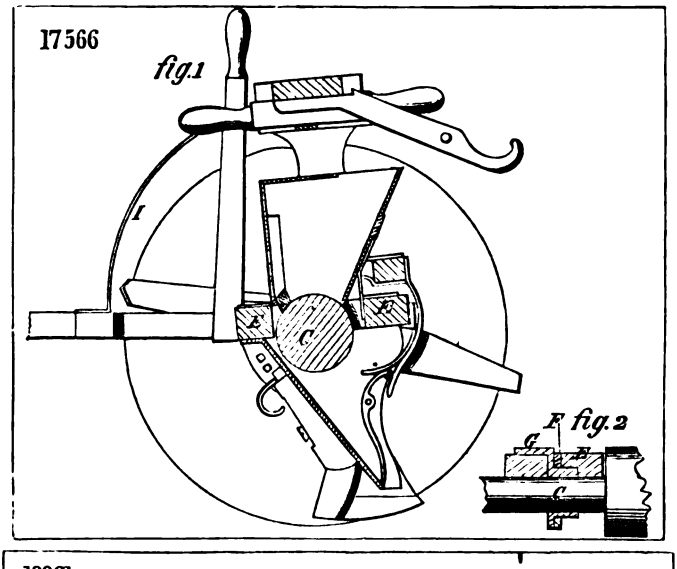
17566
fig.1
fig.2

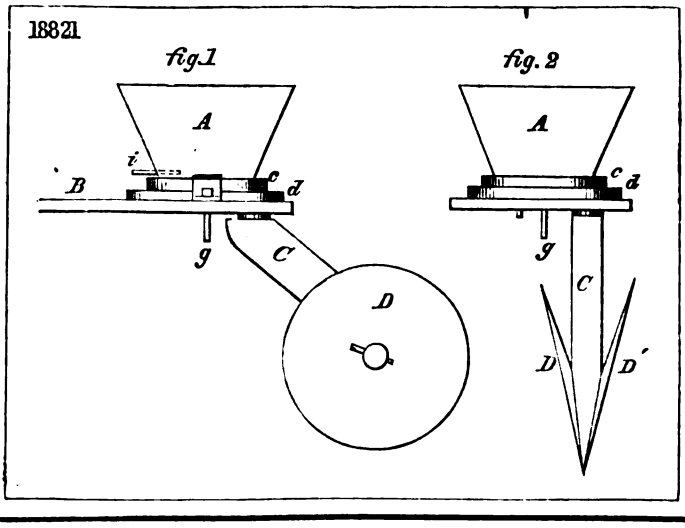
18821
fig.1
fig.2

18802

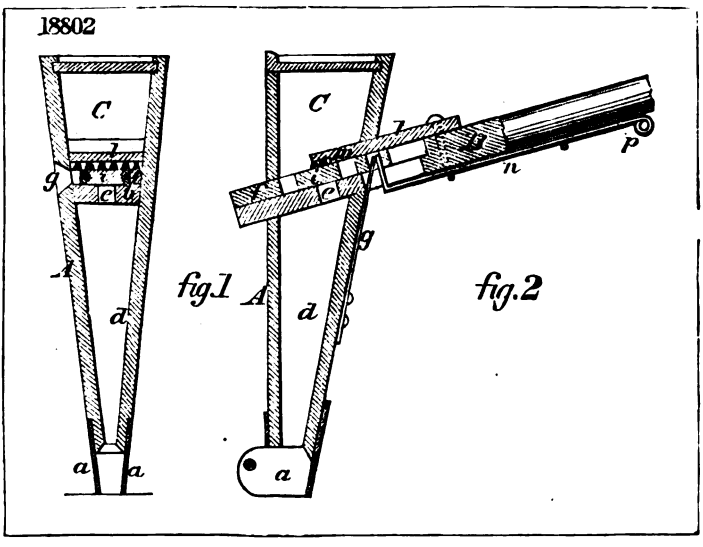
C
l
g
c
A
d
a
a
fig.1
C
l
p
n
g
A
d
a
fig.2

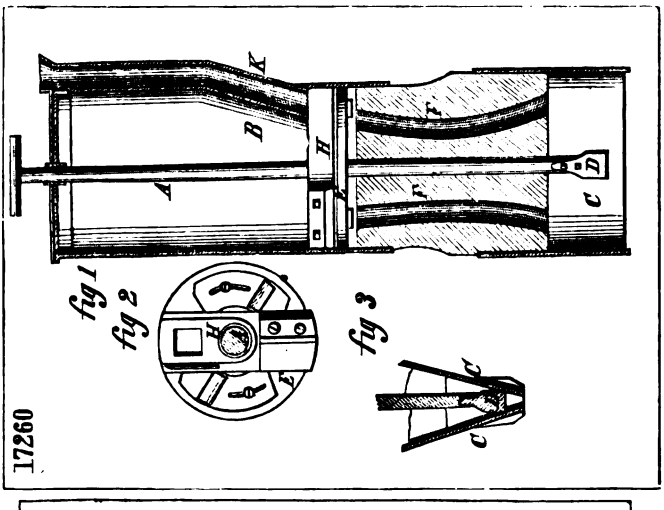
K
B
H
F
A
F
D
C
fig 1
fig 2
fig 3
C
C
17260

18843

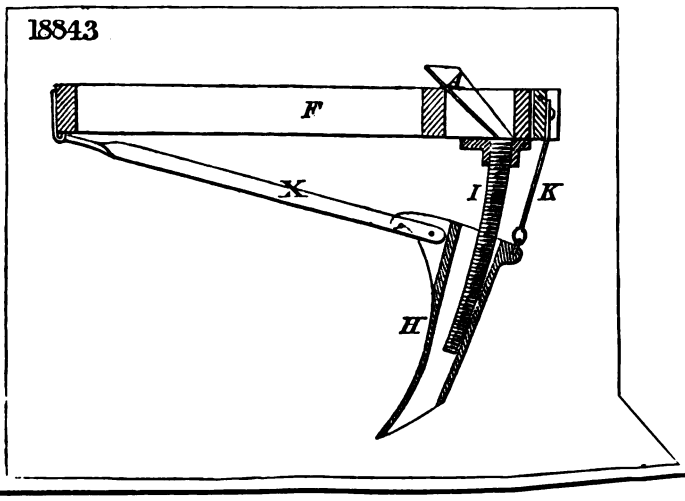
F
X
I
K
H

16368

fig. 1

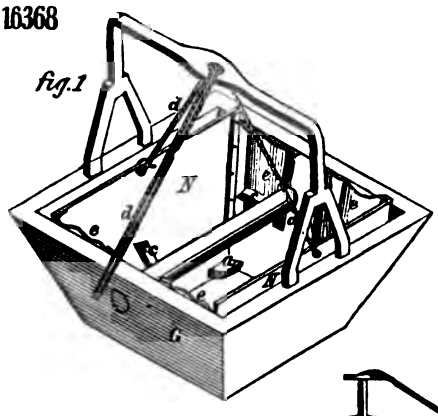

fig. 2

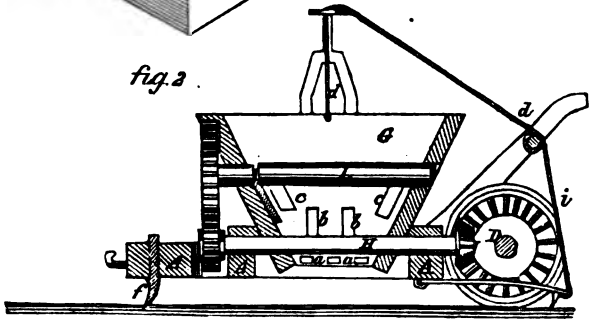

18482

fig. 1

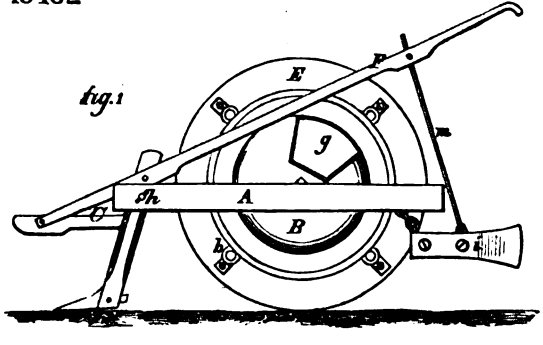

fig. 2

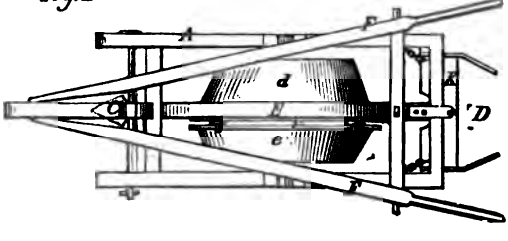

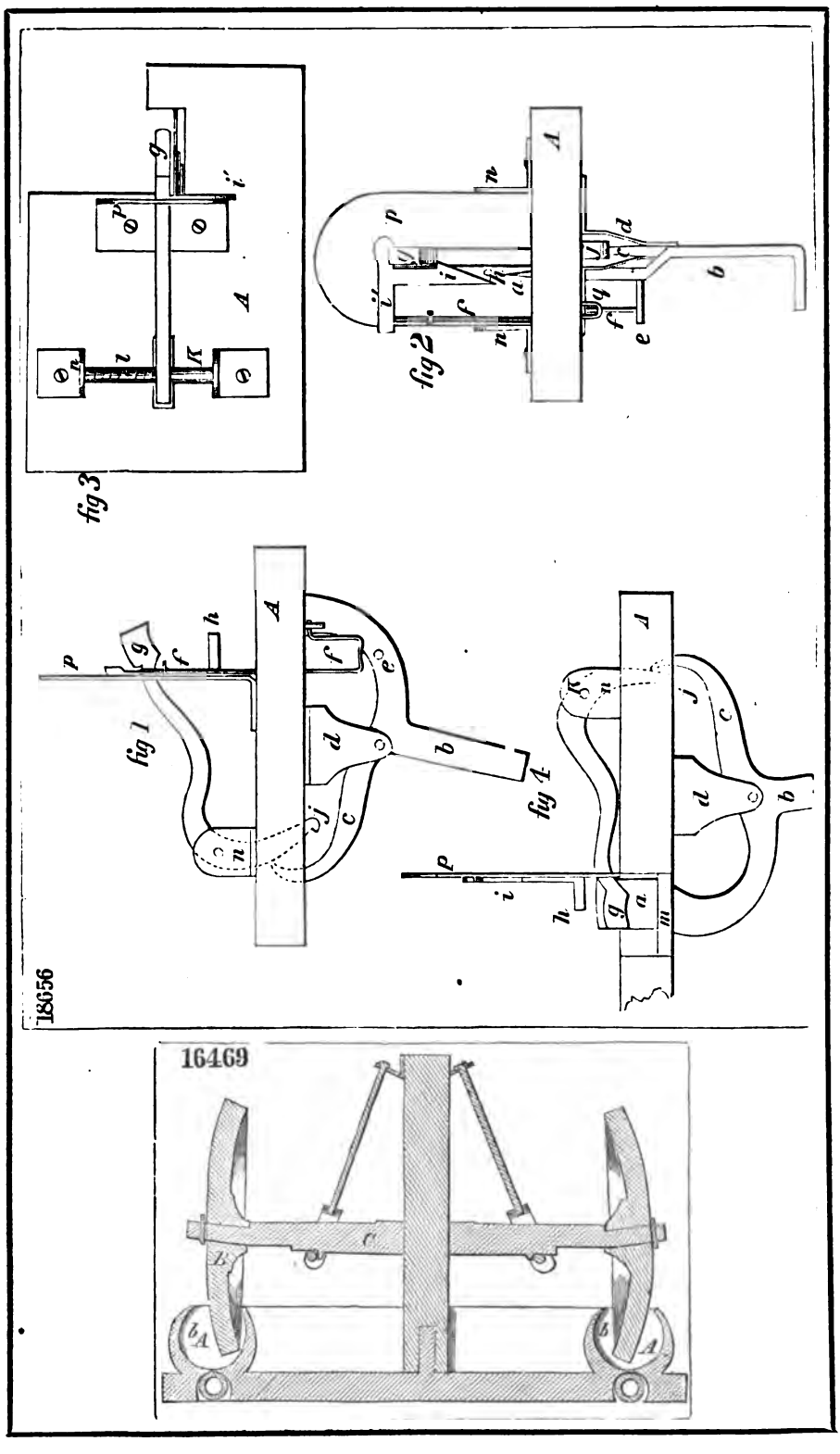
18656
fig 1
fig 2
fig 3
fig 4
16469

18762

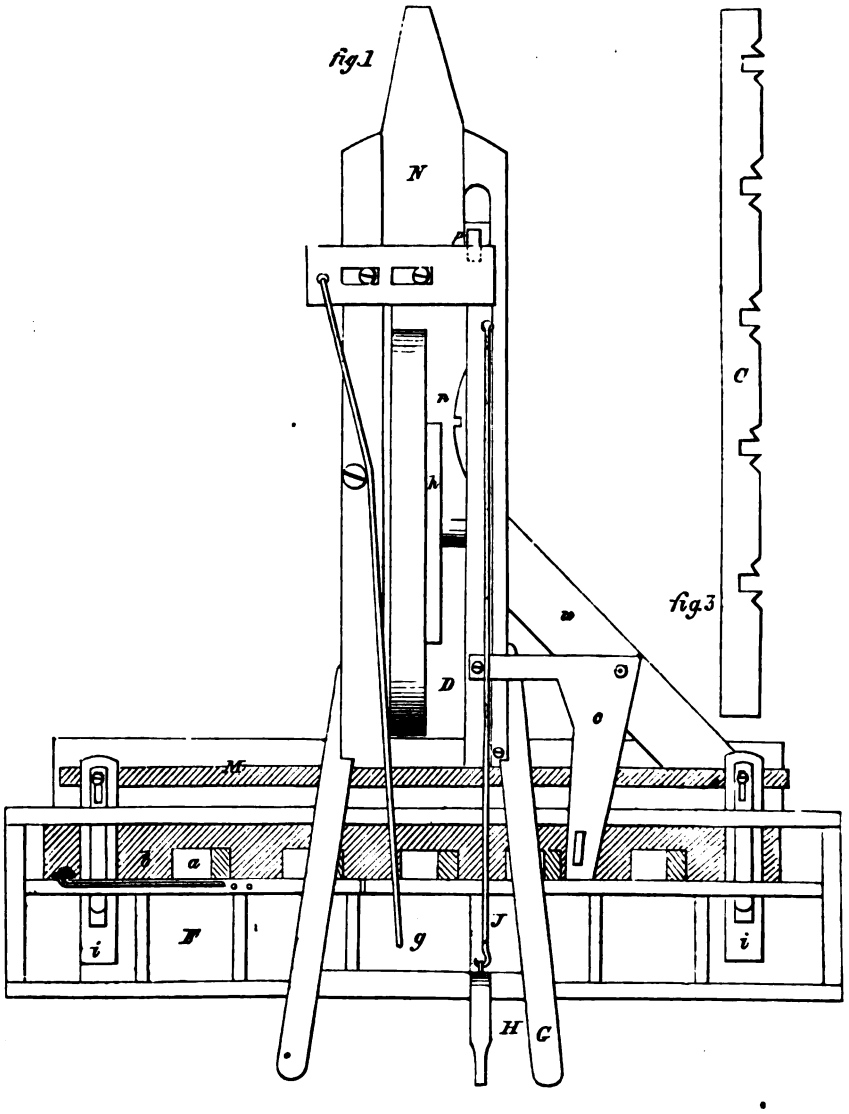

16597

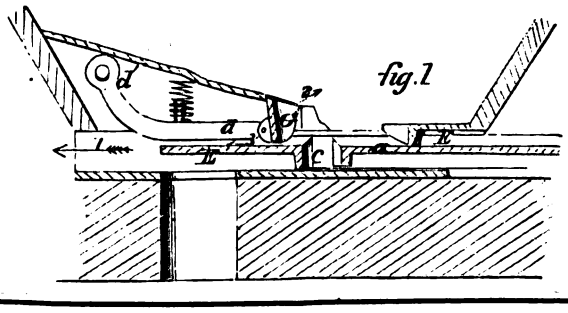

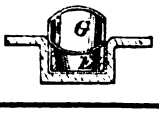

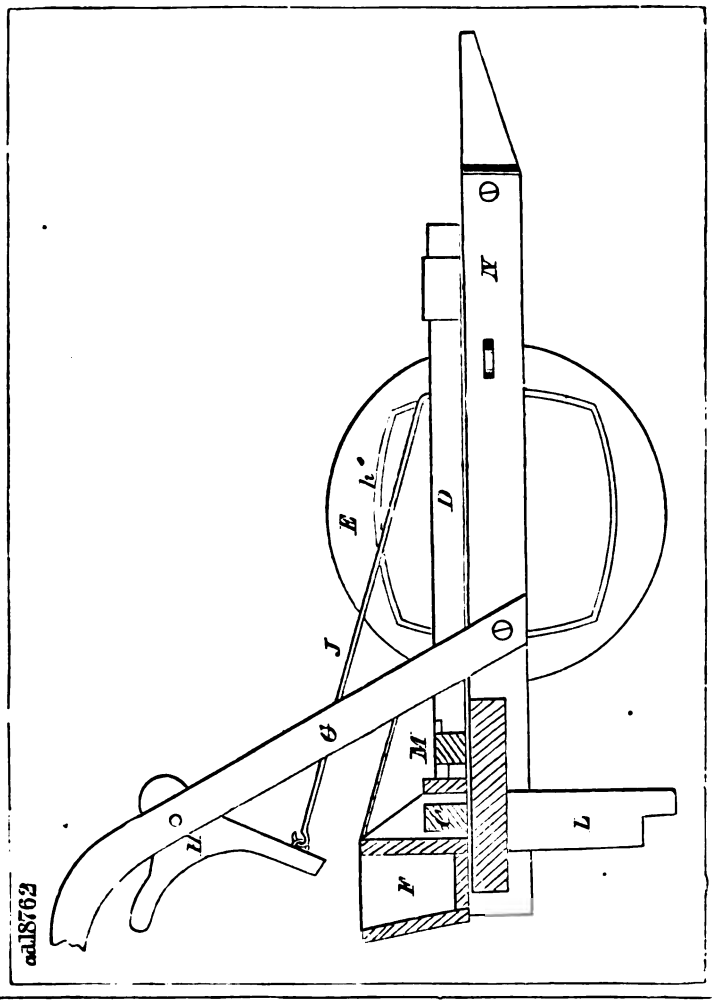
a18762
N
D
E
h'
J
G
M
L
F
L

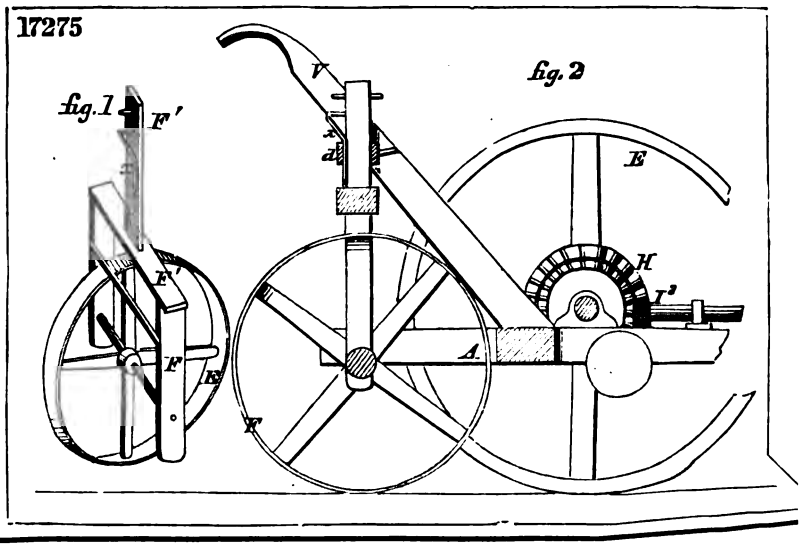
17275
fig. 1
F'
E'
F
K
V
d
fig. 2
E
H
I'
A
F

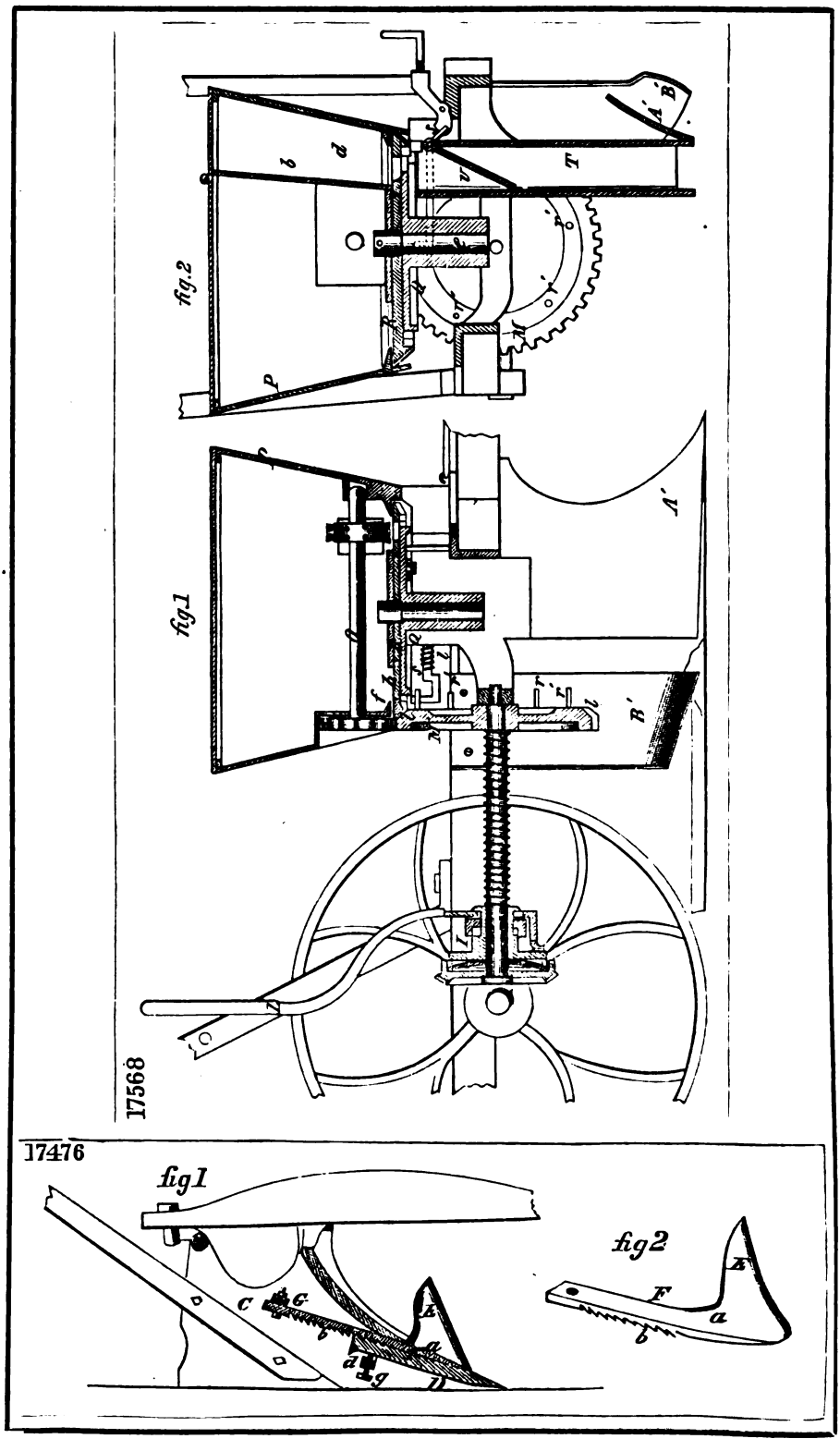
17568
fig.1
fig.2
17476
fig1
fig2

18334

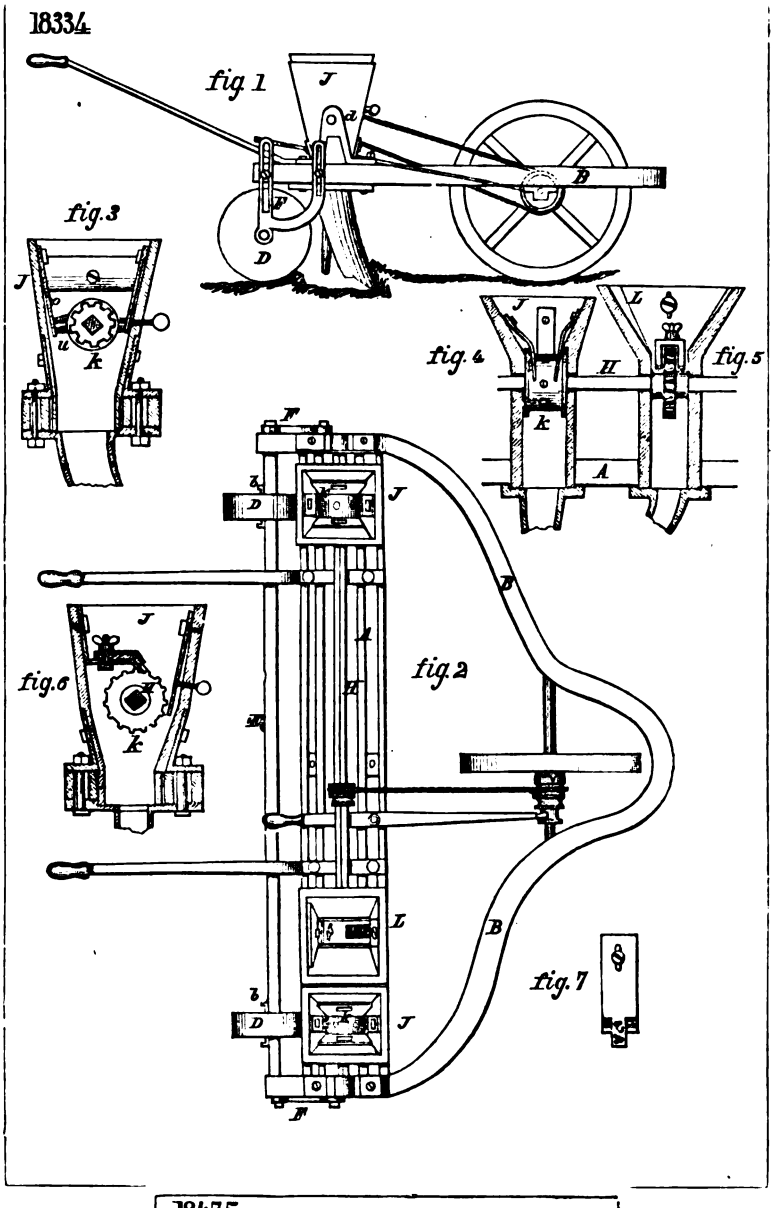

18475

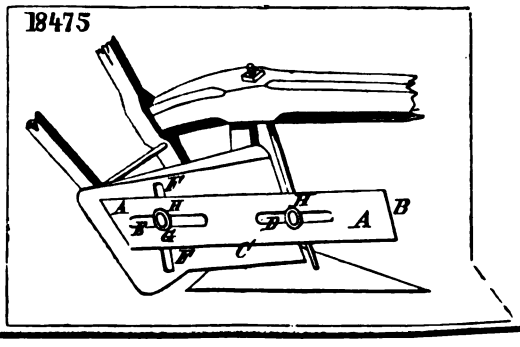

18596

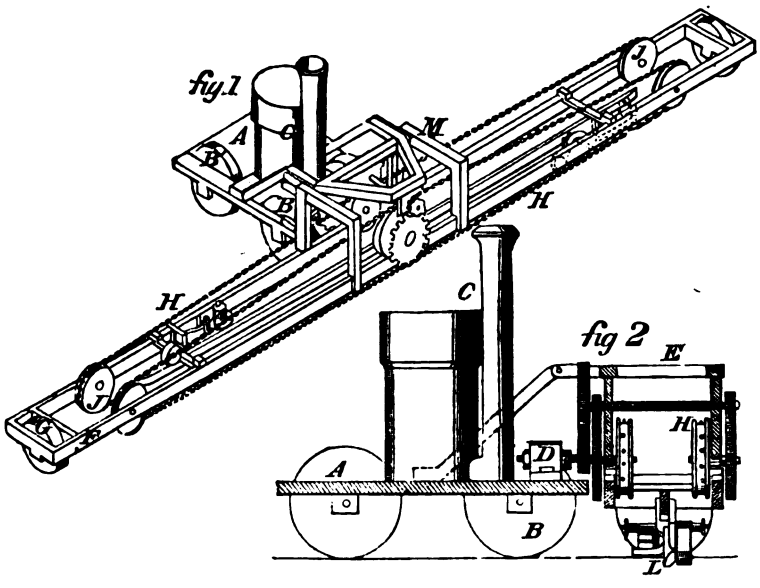

17579

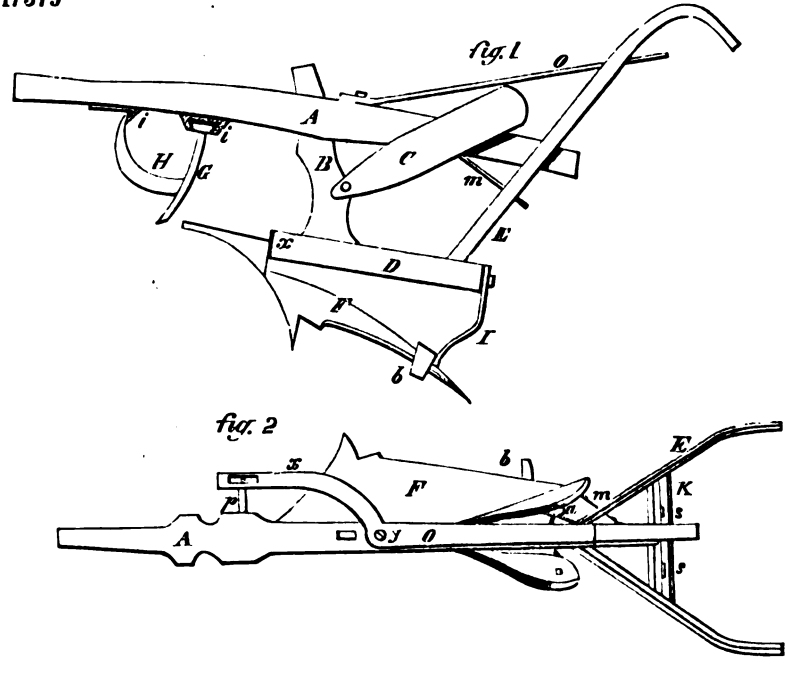

16764

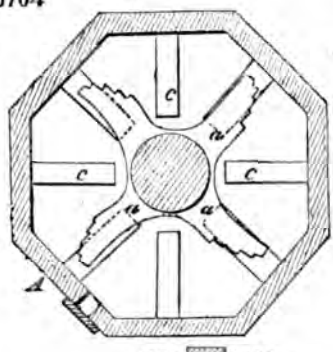

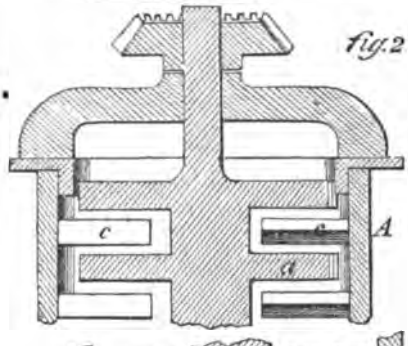

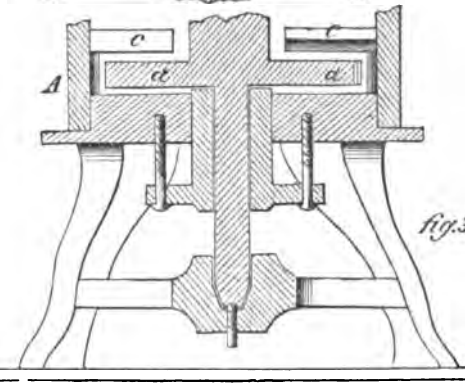

17269

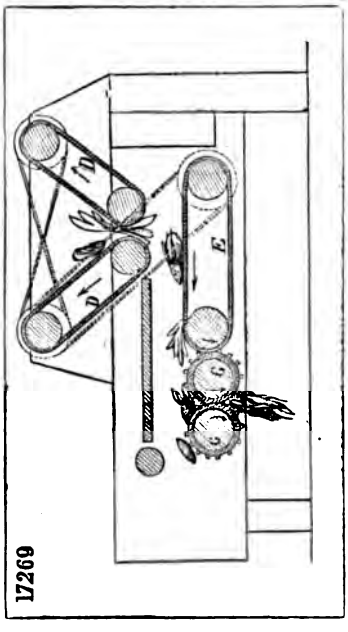

18658

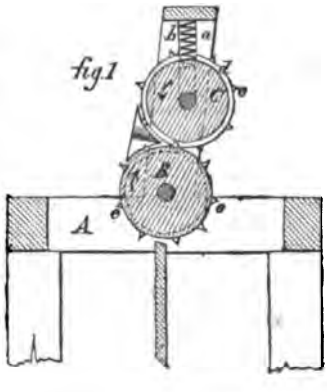

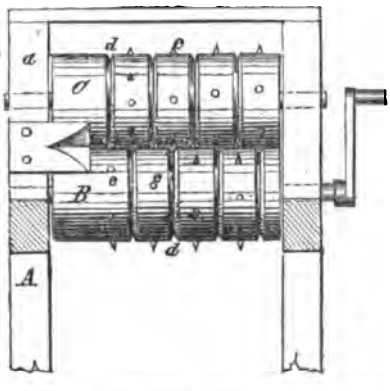

18335

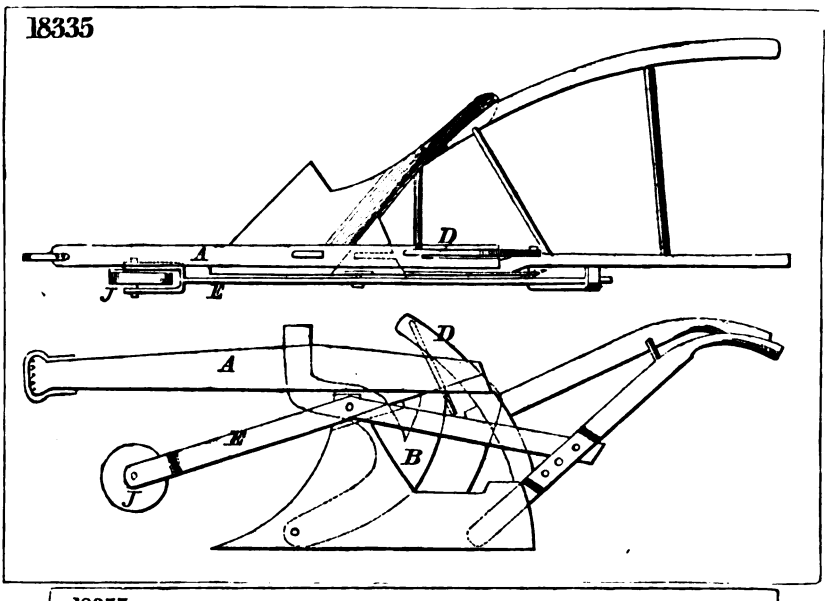

18355

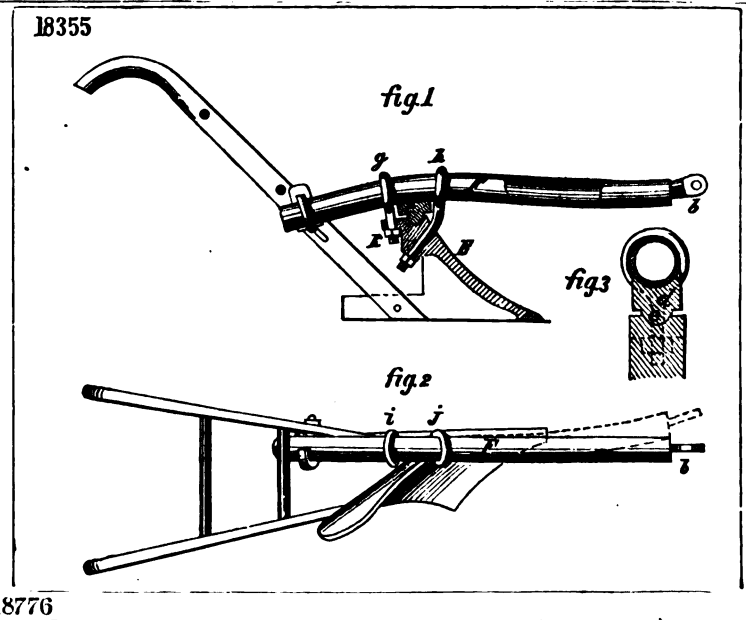

ad18776

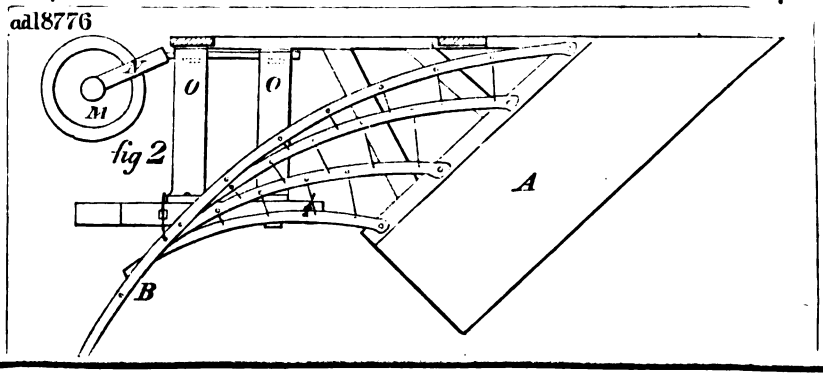

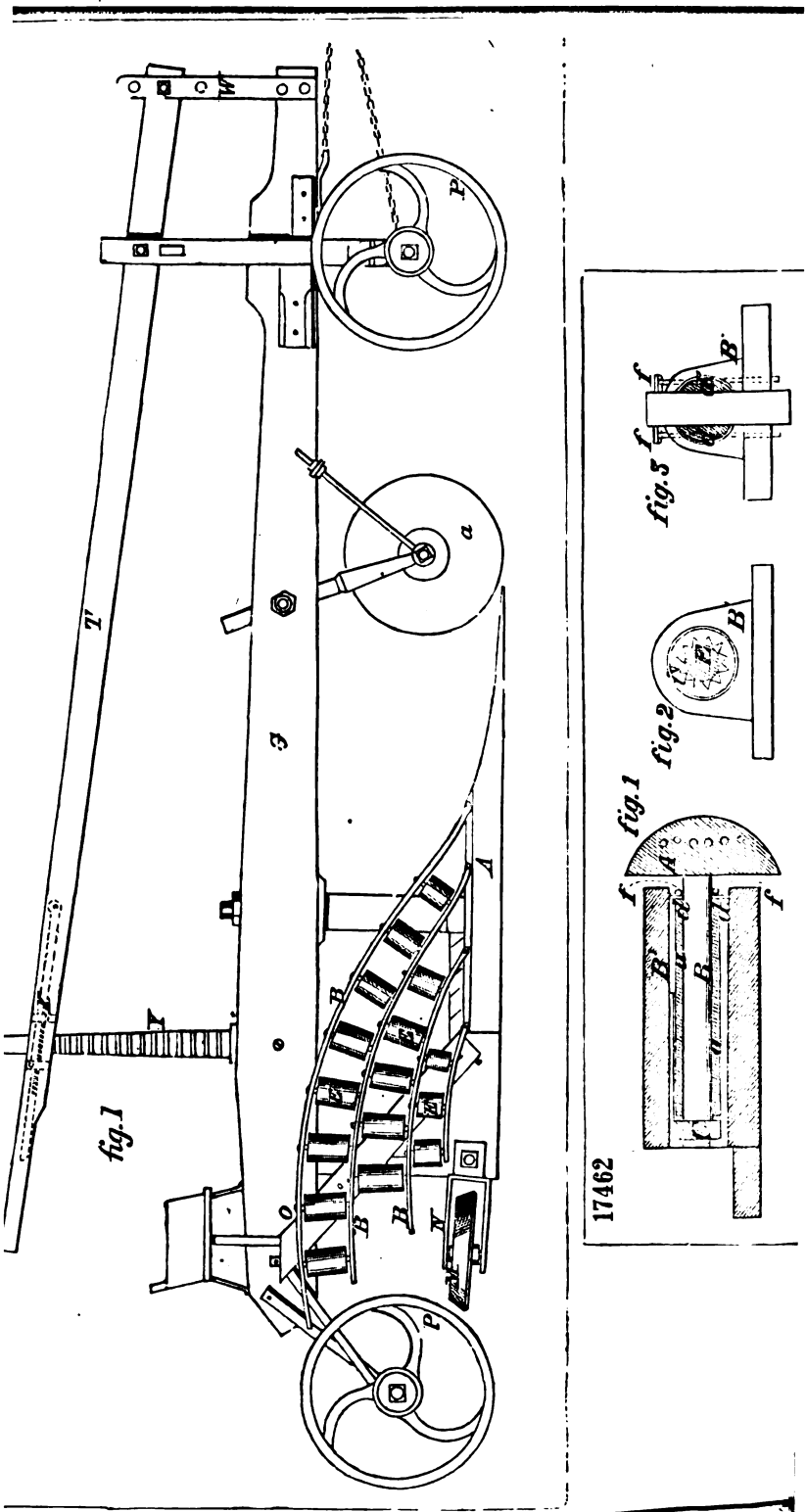
fig.1
fig.1
fig.2
fig.3
17462

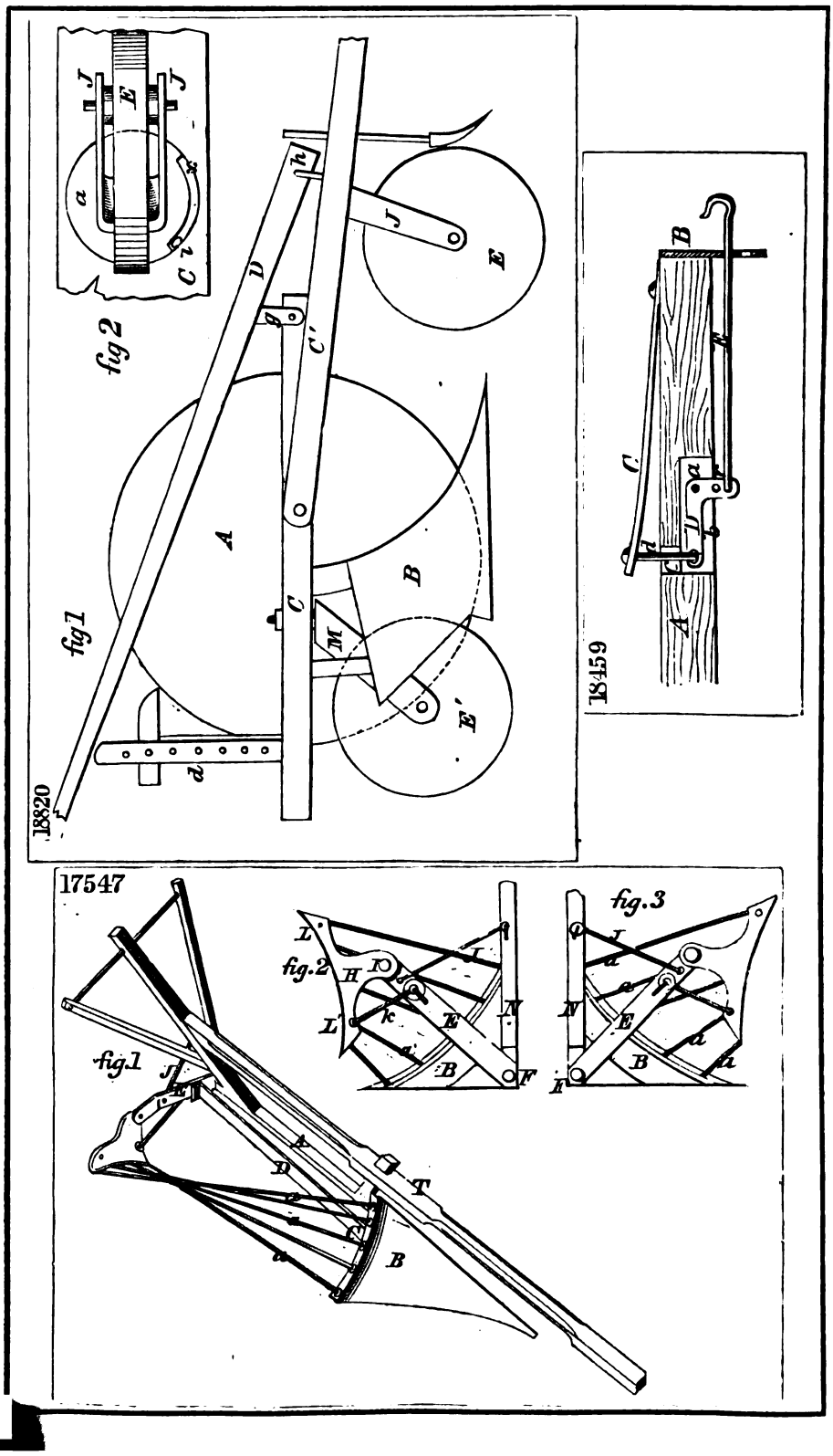
18820
fig 1
fig 2
18459
17547
fig.1
fig.2
fig.3

18783

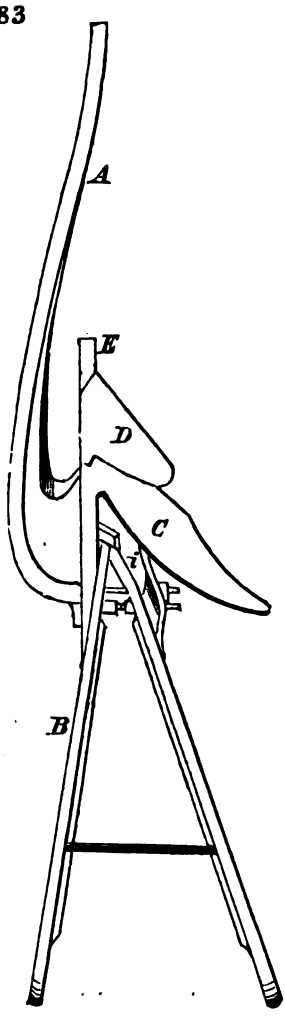

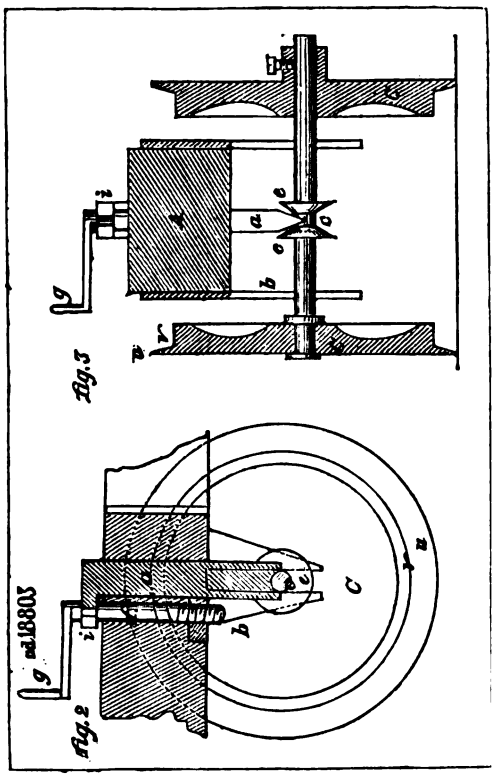

18726

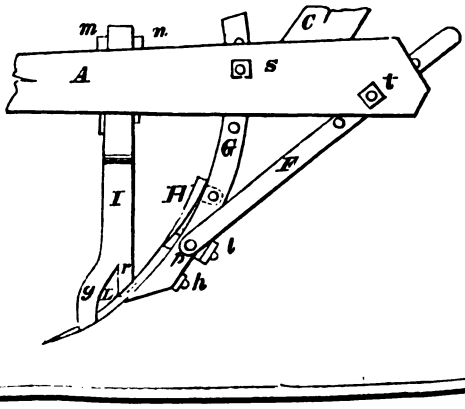

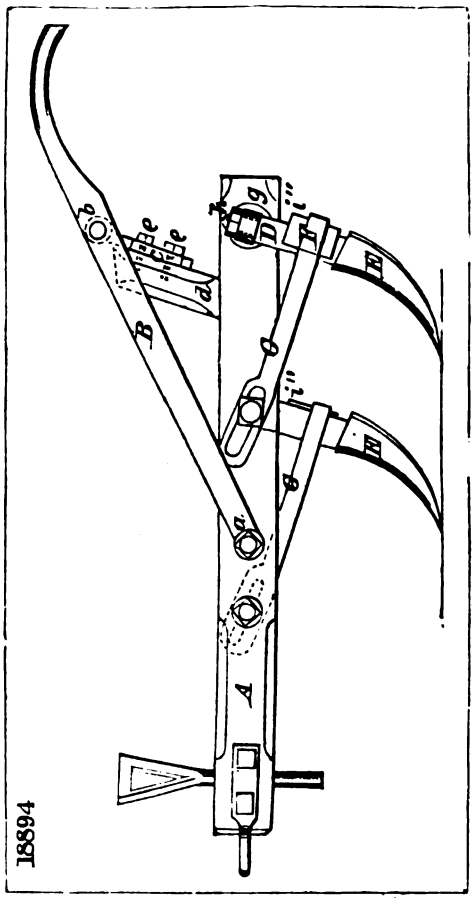
18894

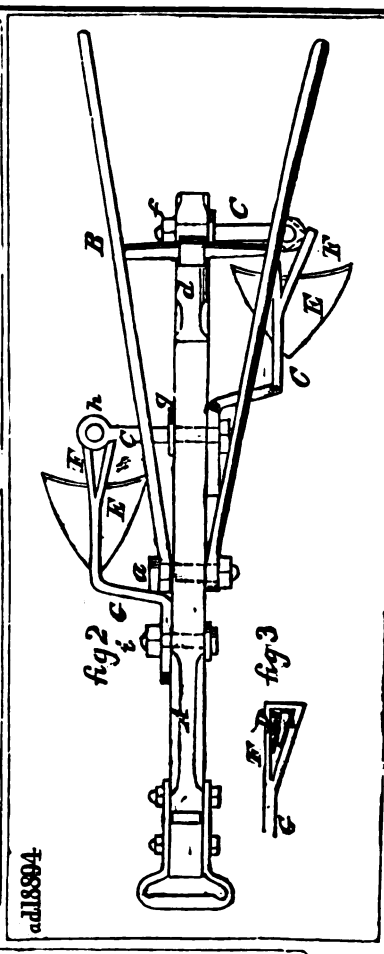
fig 2
fig 3
ad18894

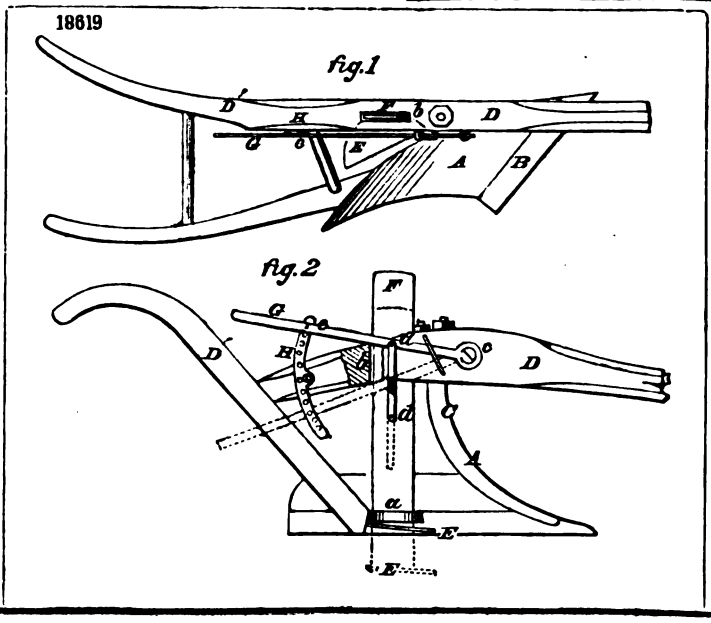
18619
fig.1
fig.2

18468

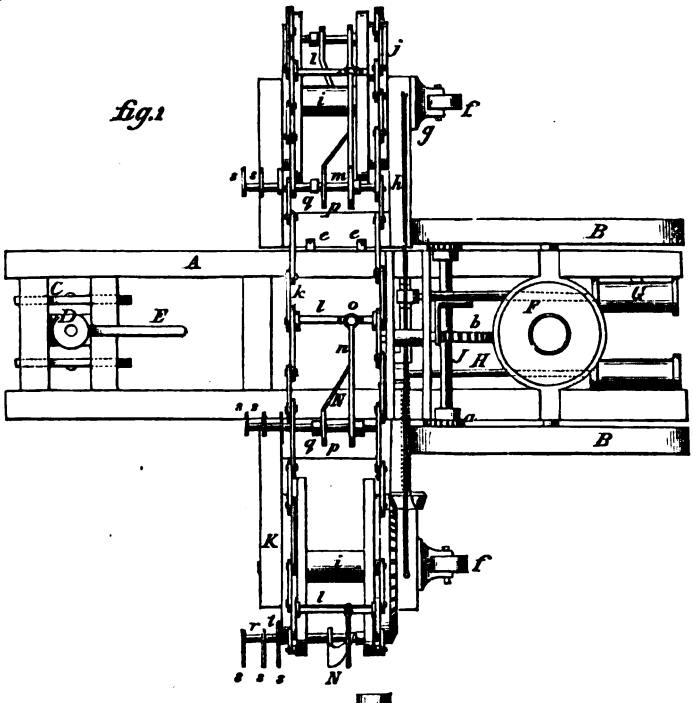

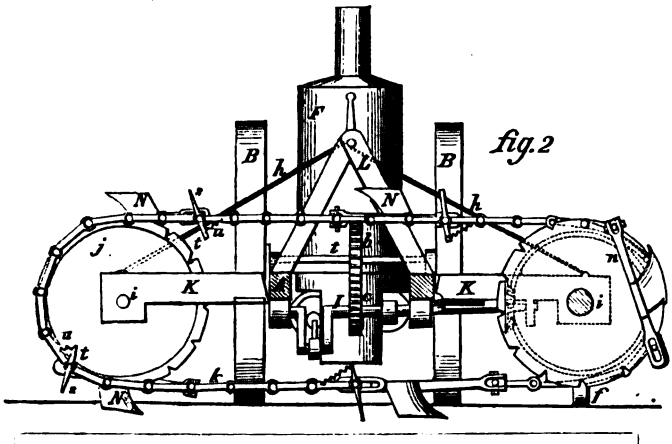

17577

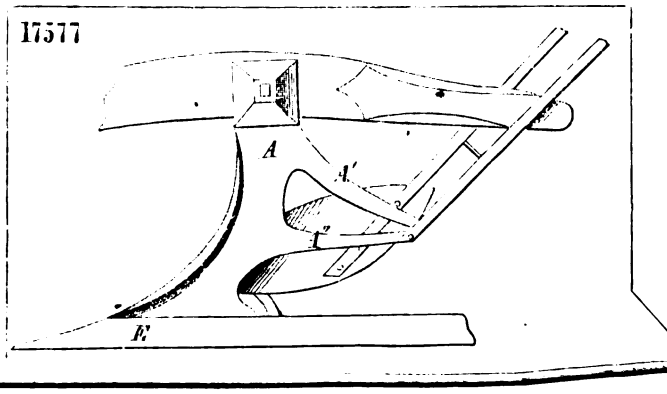

18609

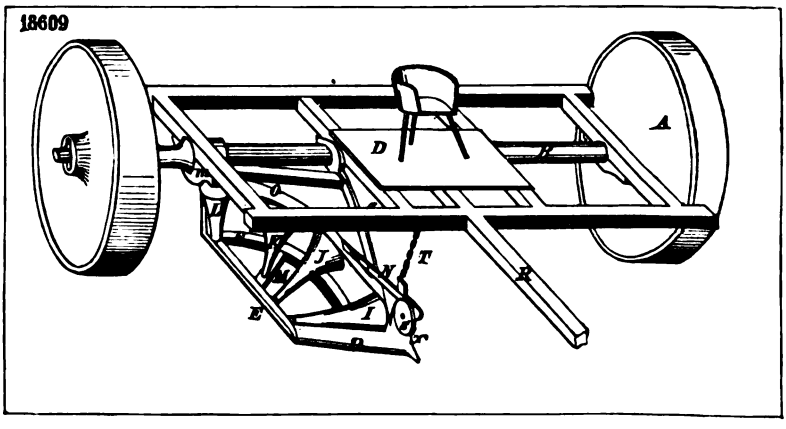

18603

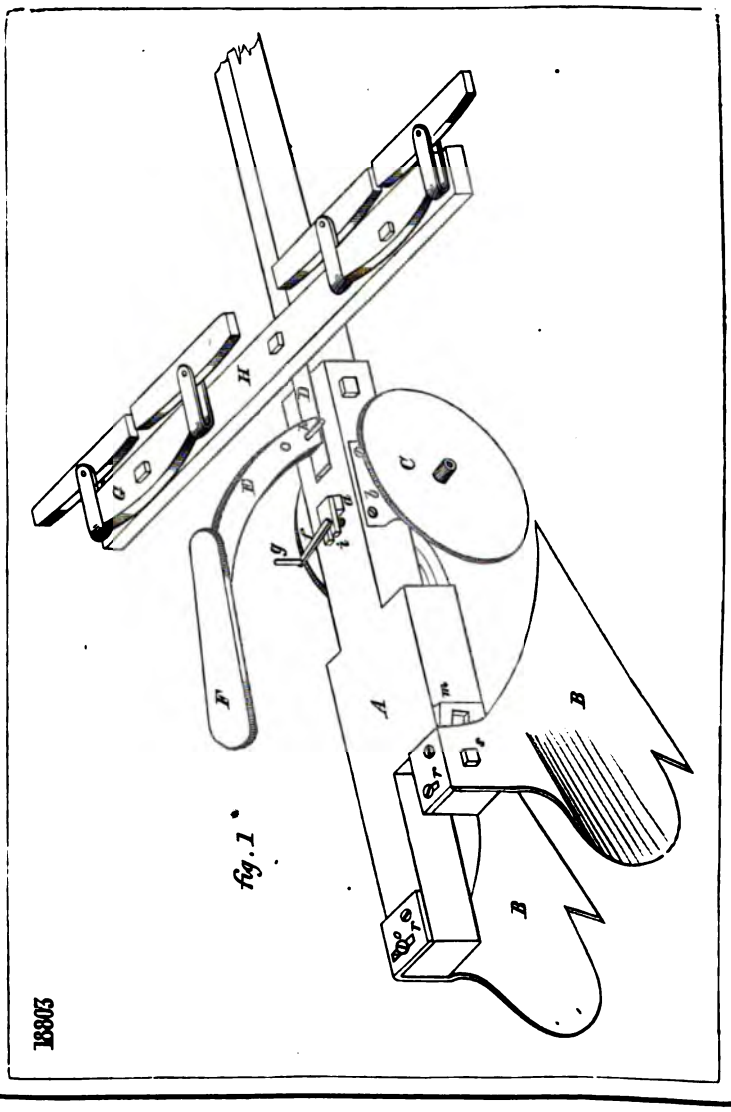

Fig. 1

17591

fig. 1.

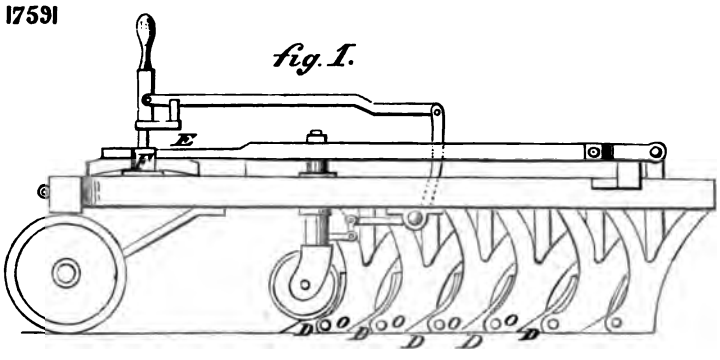

fig. 2.

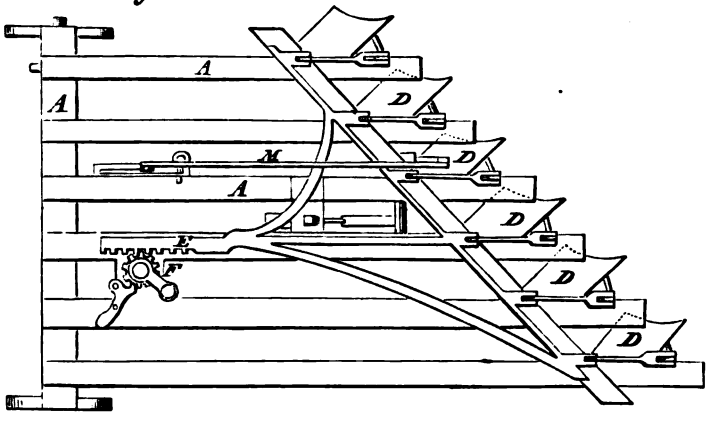

17777.

fig. 1

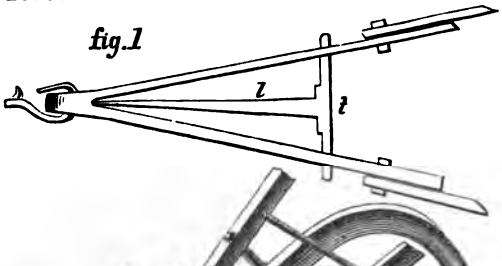

fig. 2

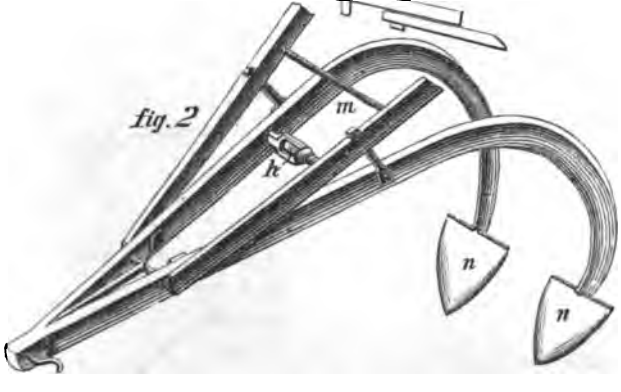

17212

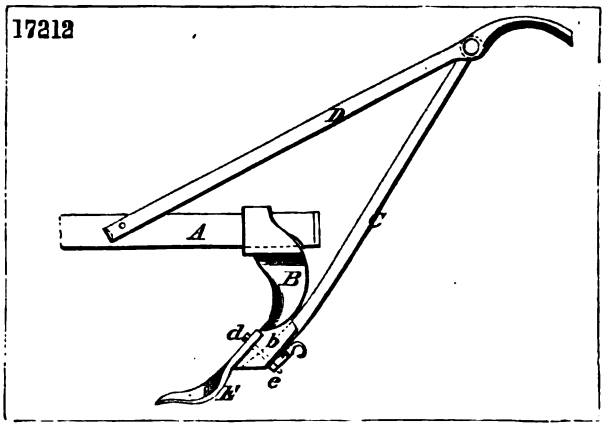

18600

fig 1

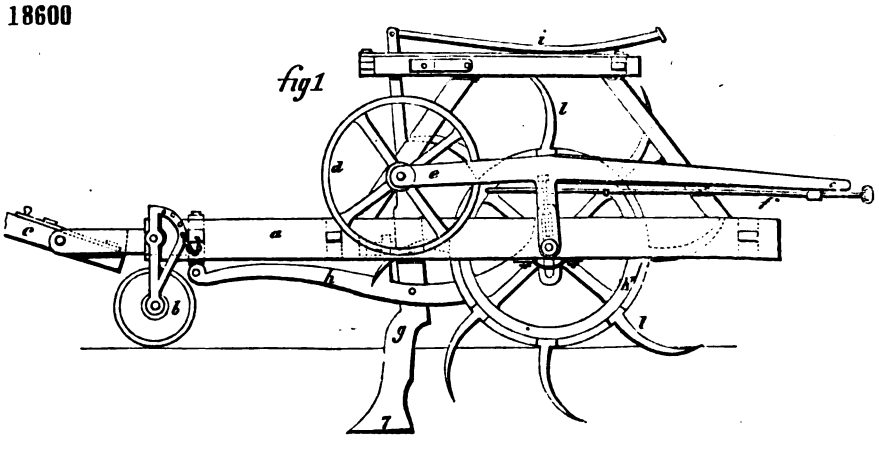

fig 2

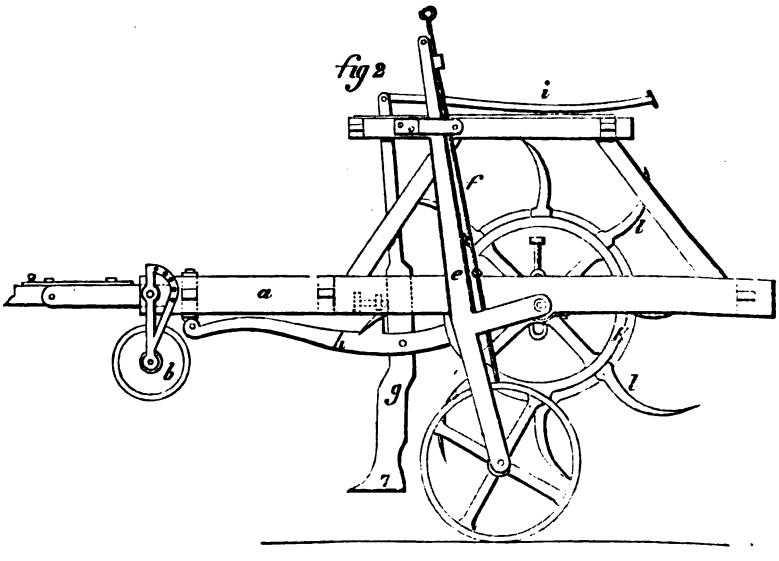

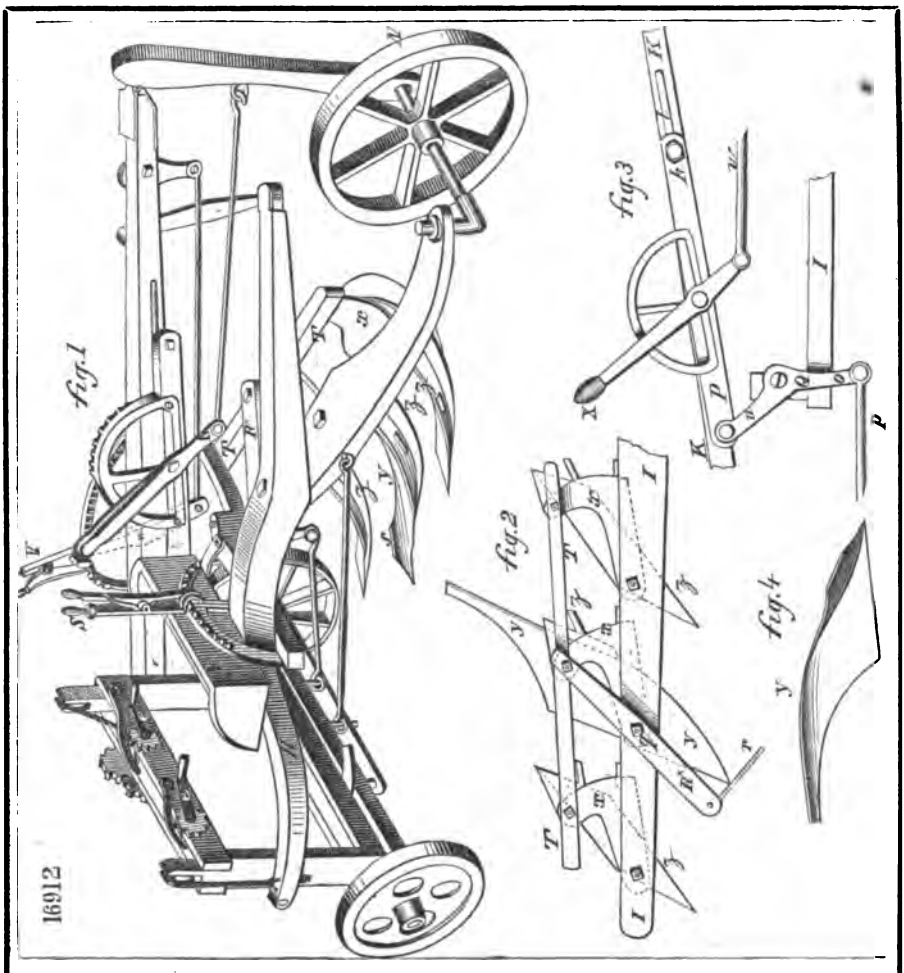
16912
fig.1
fig.2
fig.3
fig.4

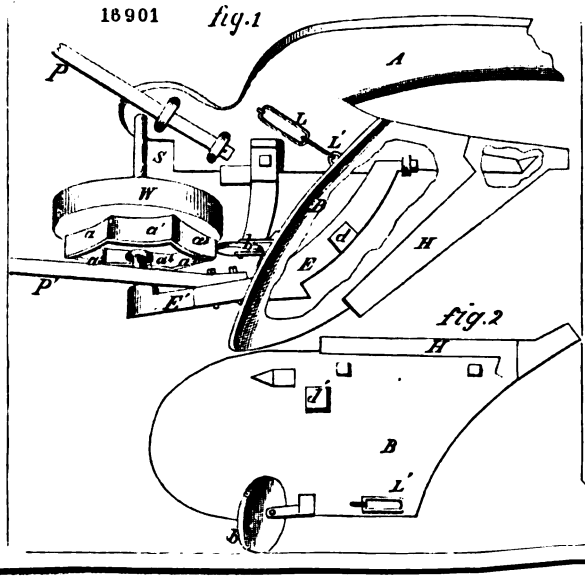
16901
fig.1
fig.2

18446

fig. 1

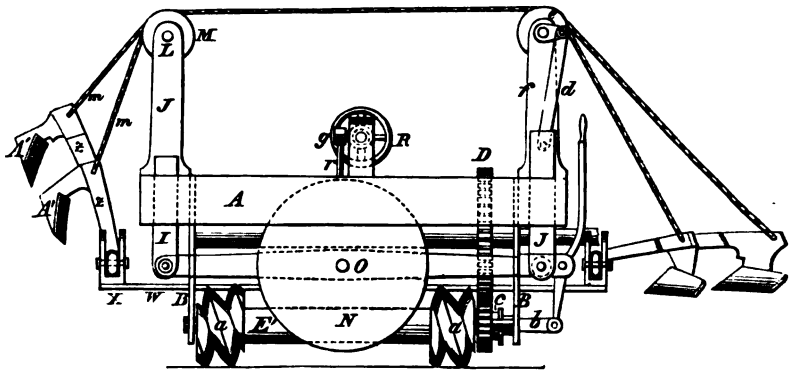

fig. 2

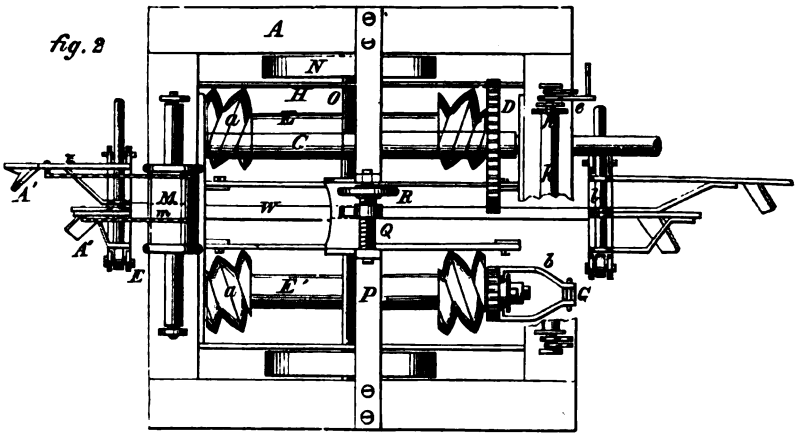

17594

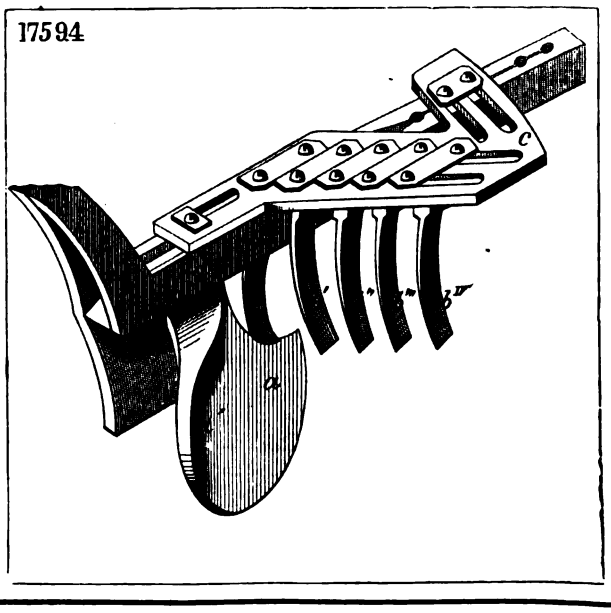

18343

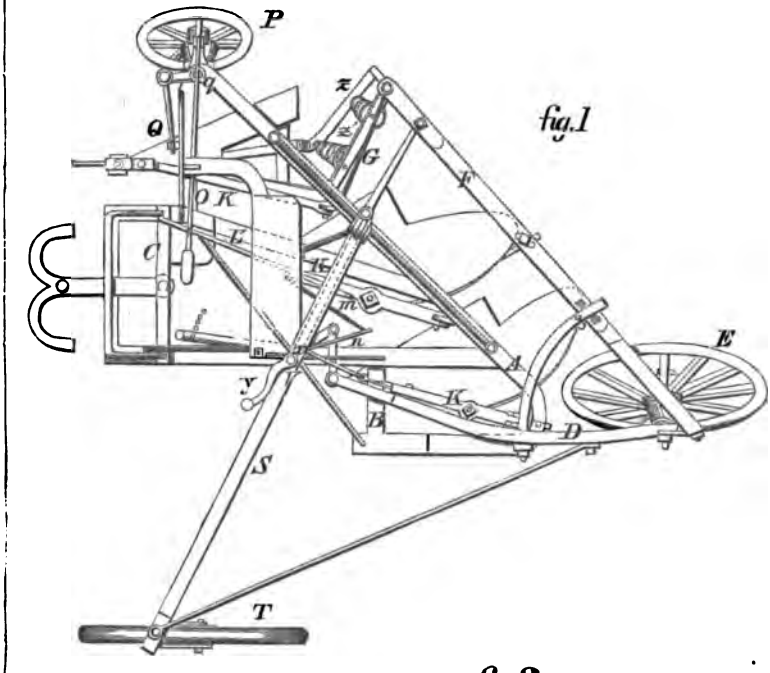

fig.1

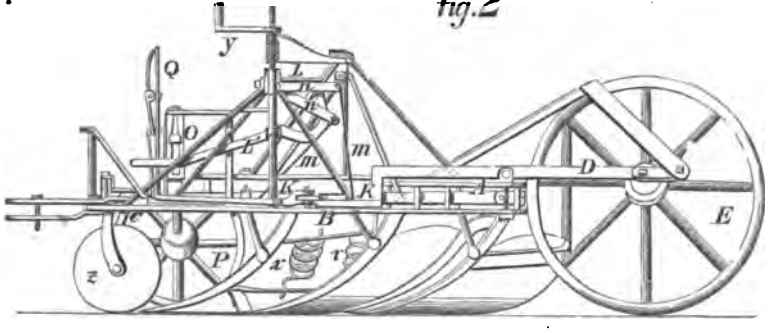

fig.2

18336

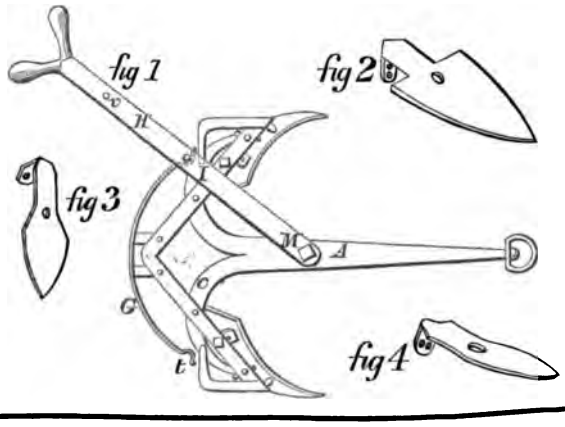

16918

fig. 1

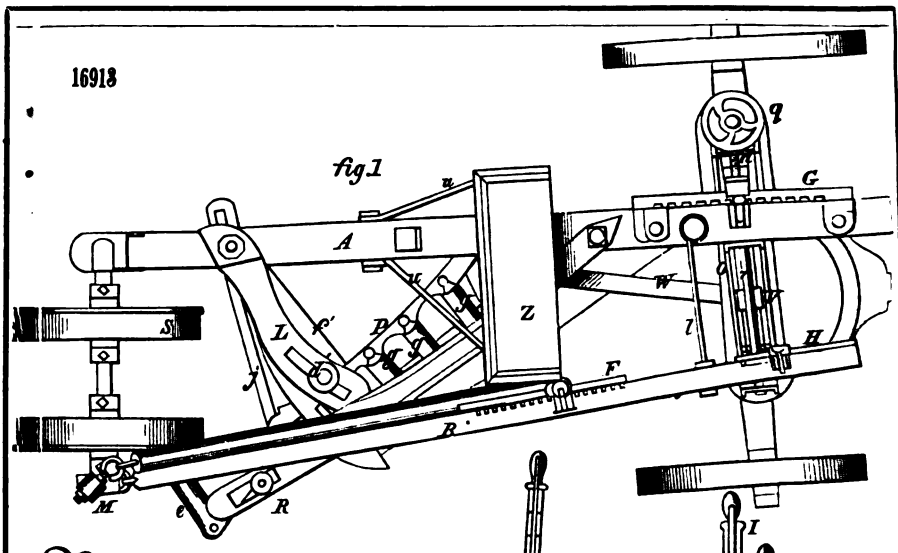

fig. 2

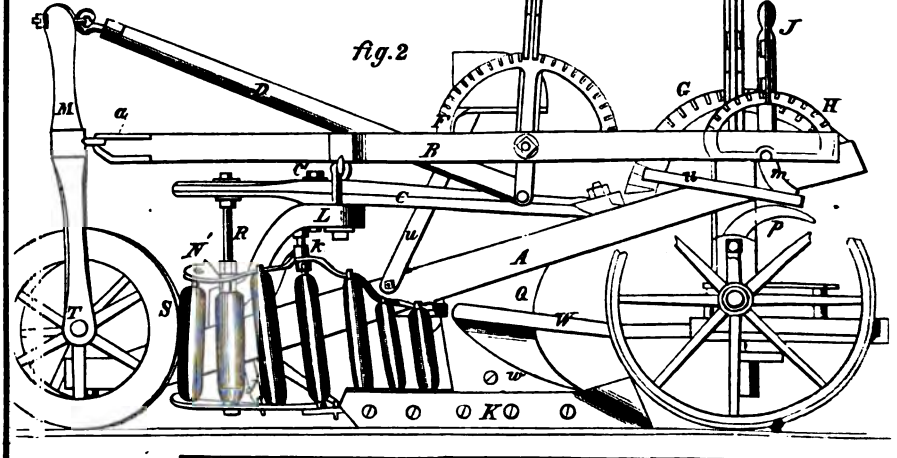

18825

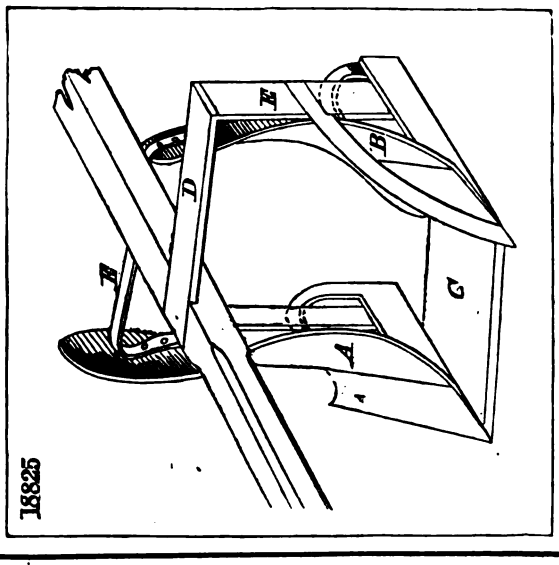

16937

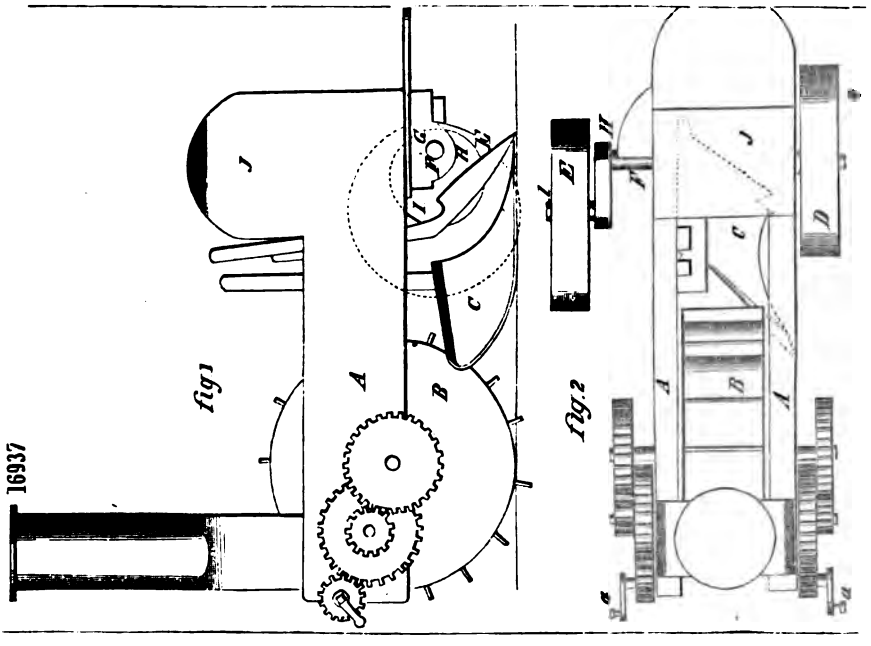

18397

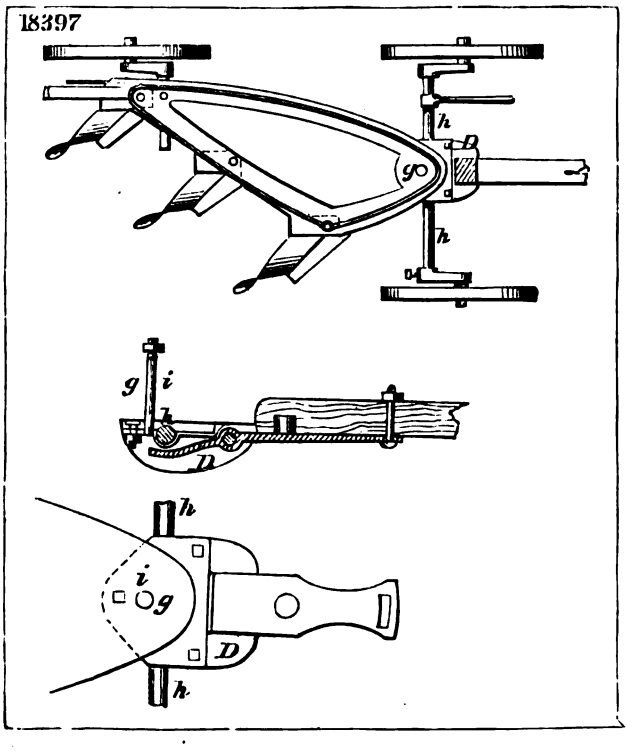

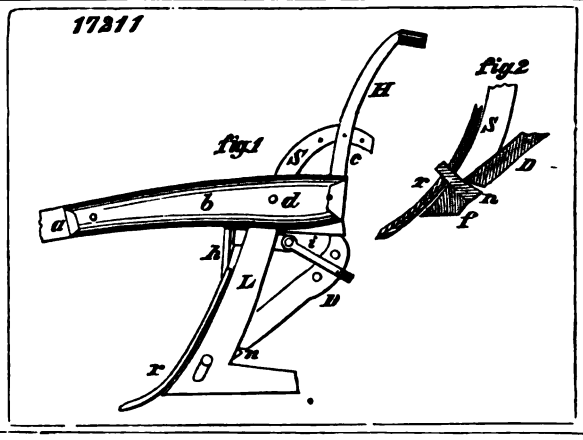
17211
fig 1
fig 2
H
S
c
b
d
a
h
L
D
x
m
s
r
n
f

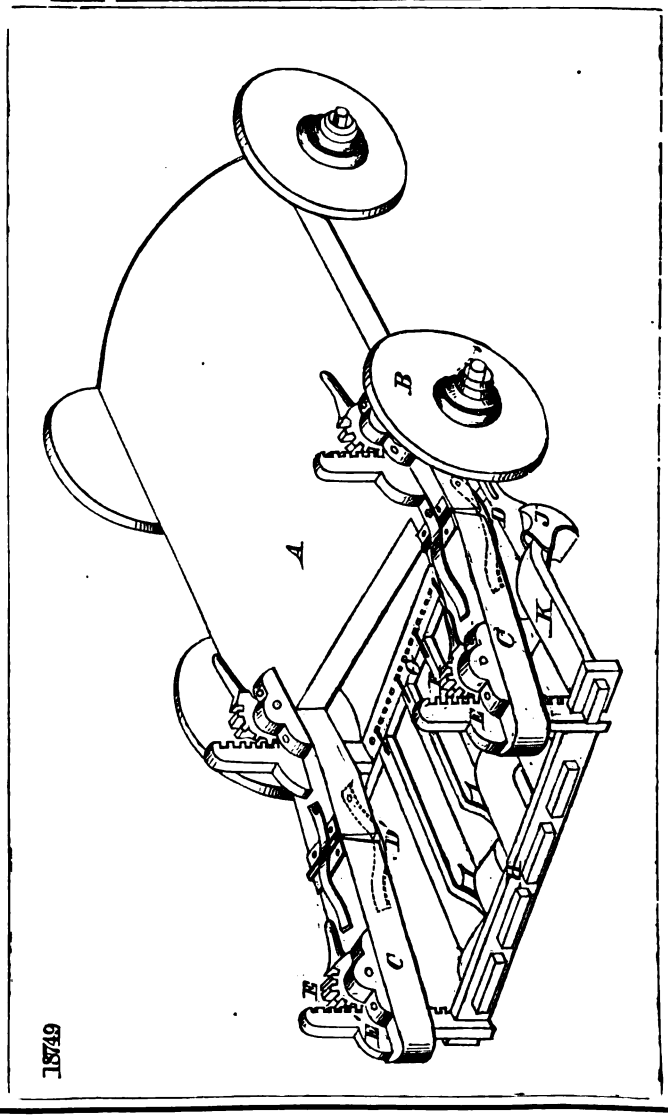
A
B
C
D
E
F
G
H
K
18749

17430

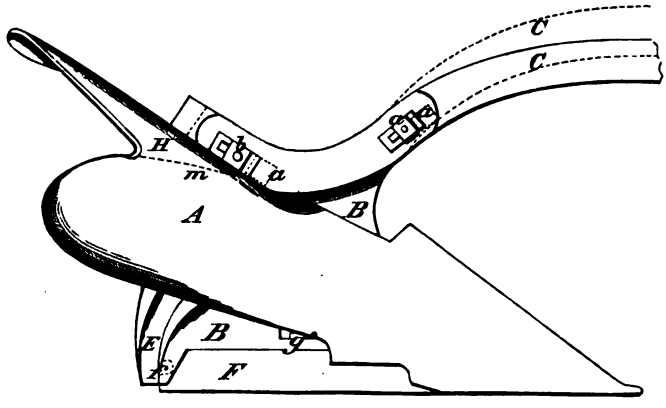

17428

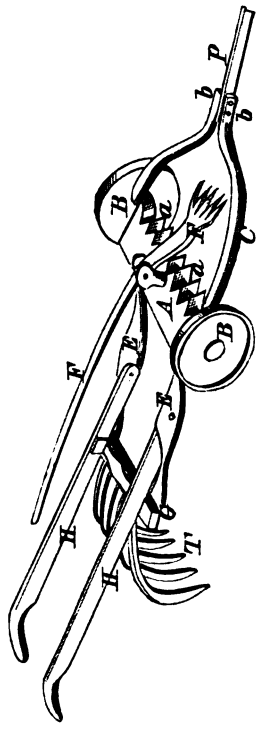

18480

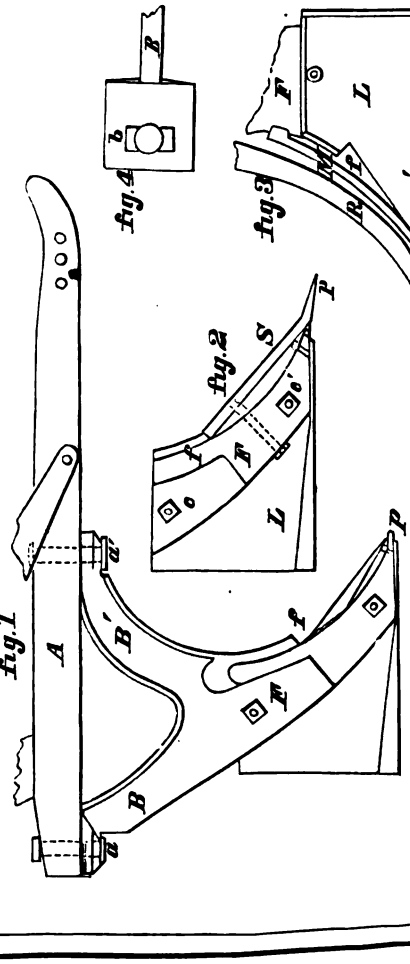

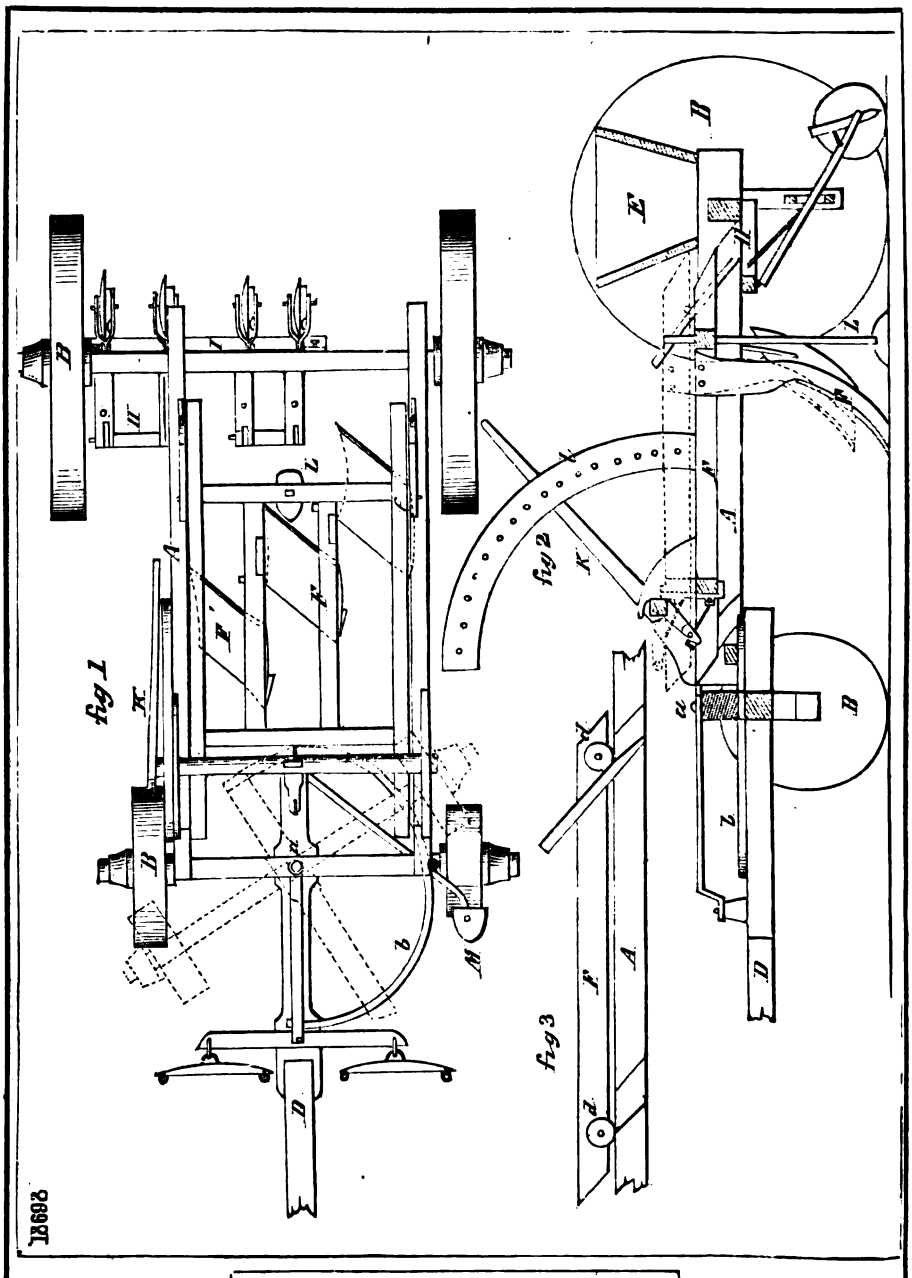
Fig 1
Fig 2
Fig 3
18698

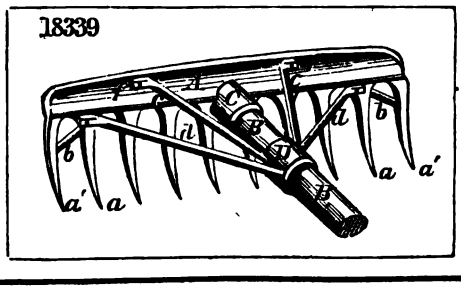
18339

18954

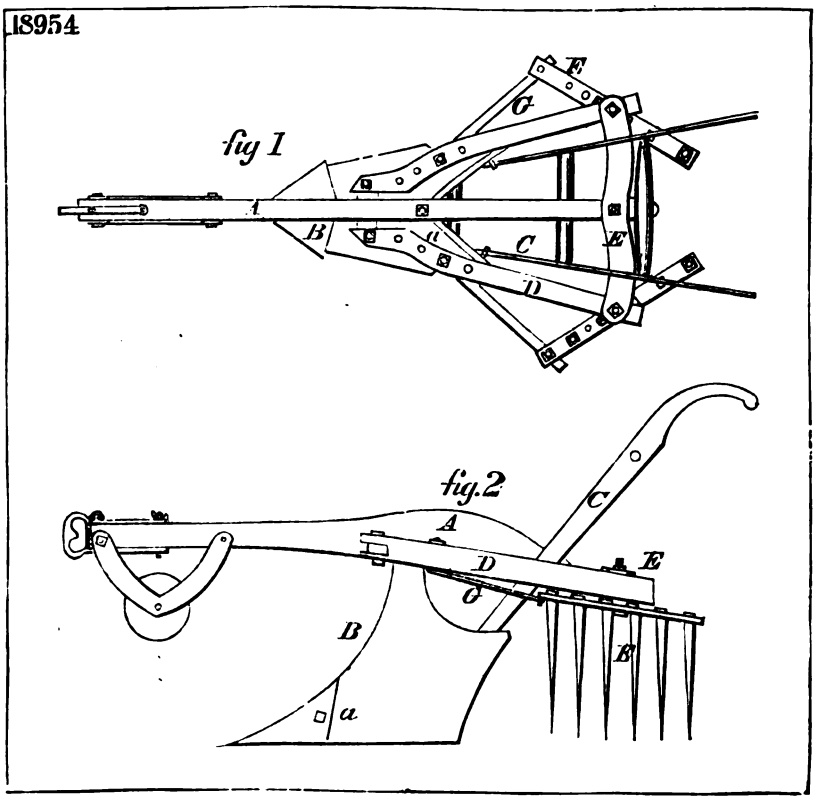
fig 1
E
G
A
B
a
C
E
D
fig.2
C
A
D
E
G
B
E
a

17129

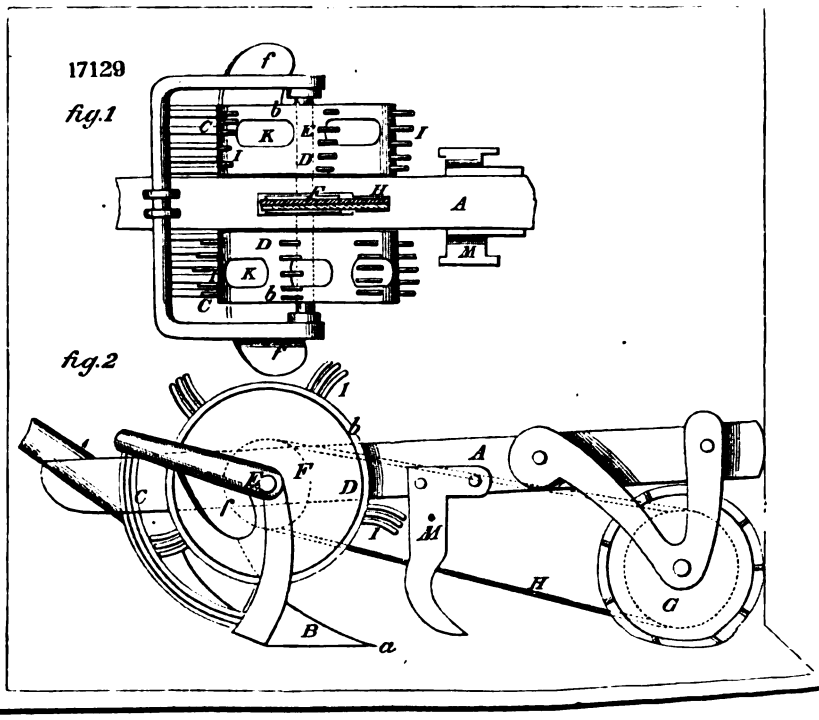
fig.1
f
b
C
K
E
I
I
D
G
H
A
D
M
K
b
C
f
fig.2
I
b
A
E
F
D
C
f
I
M
H
G
B
a

18009

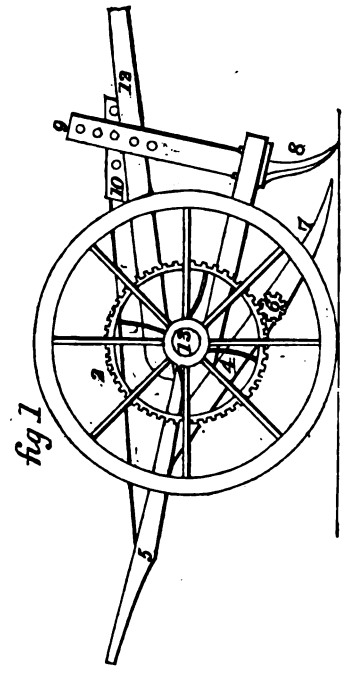
fig 1
13
9
10
8
7
5
2
4
6
3
1

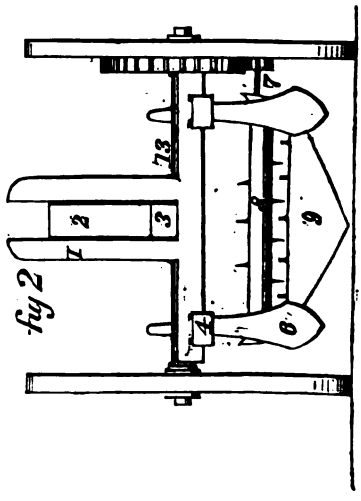
fig 2
7
13
2
3
1
9
4
6

17827

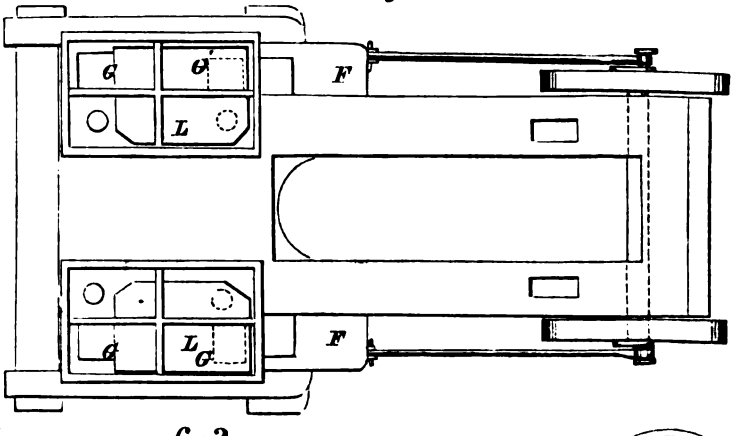
fig. 1
G
G
L
F
G
L
G
F

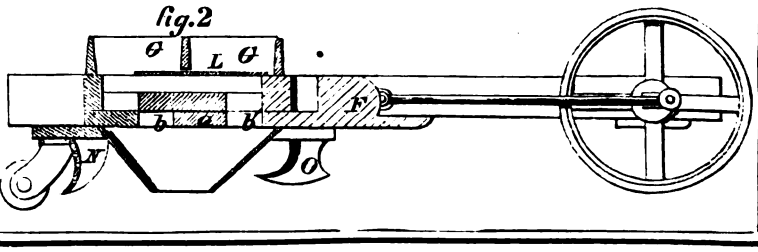
fig. 2
G
L
G
b
a
b
F
N
O

16582

fig. 1

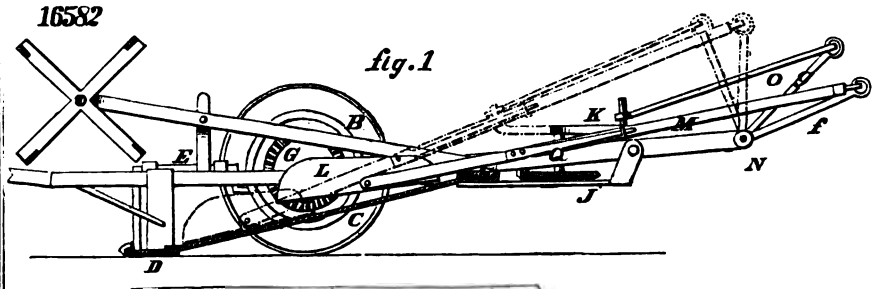

fig. 2

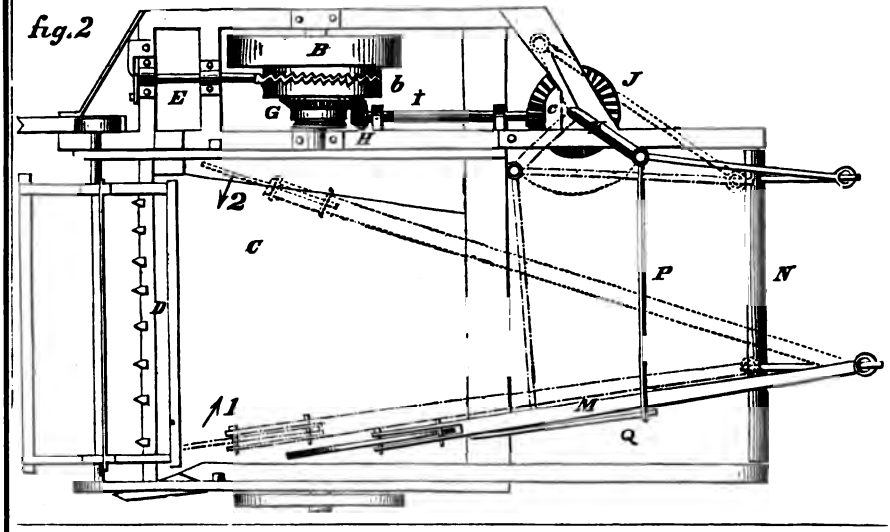

16722

fig. 1

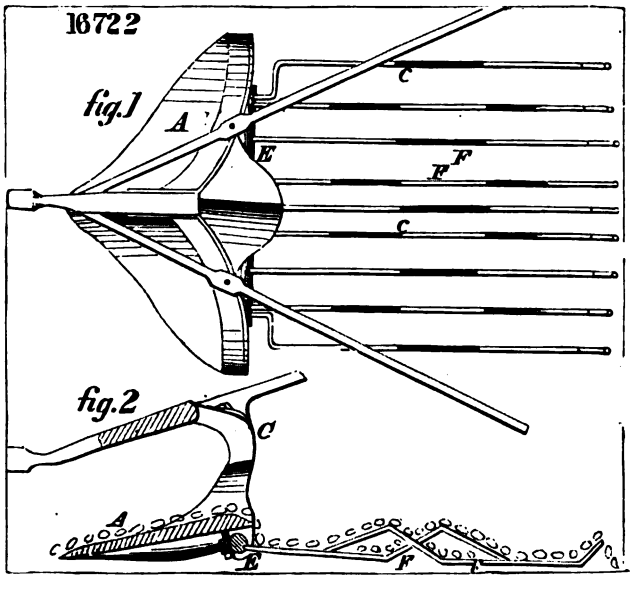

16599

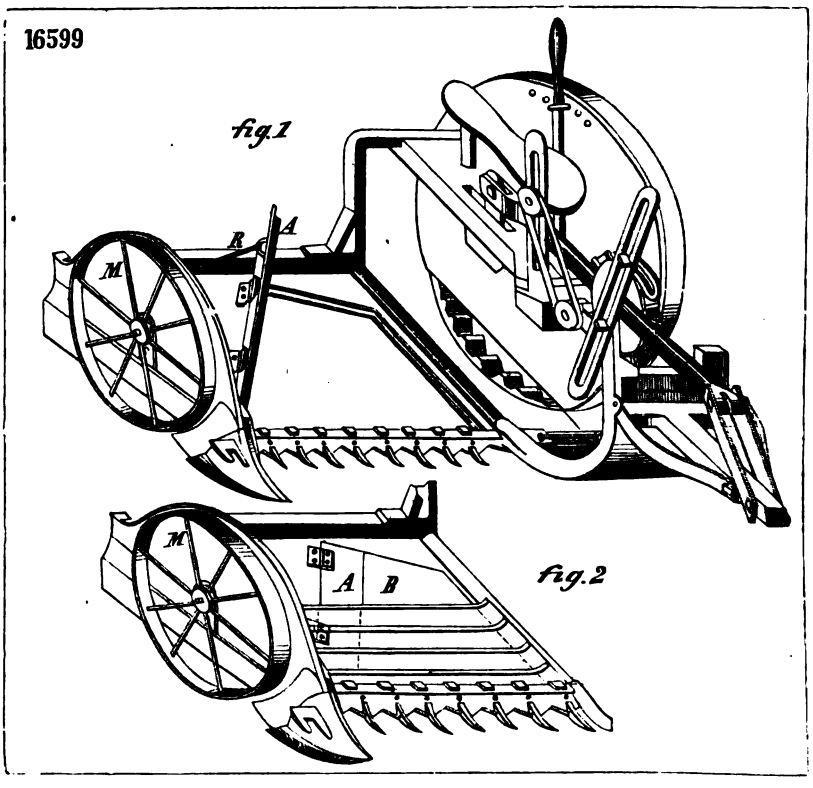

18221

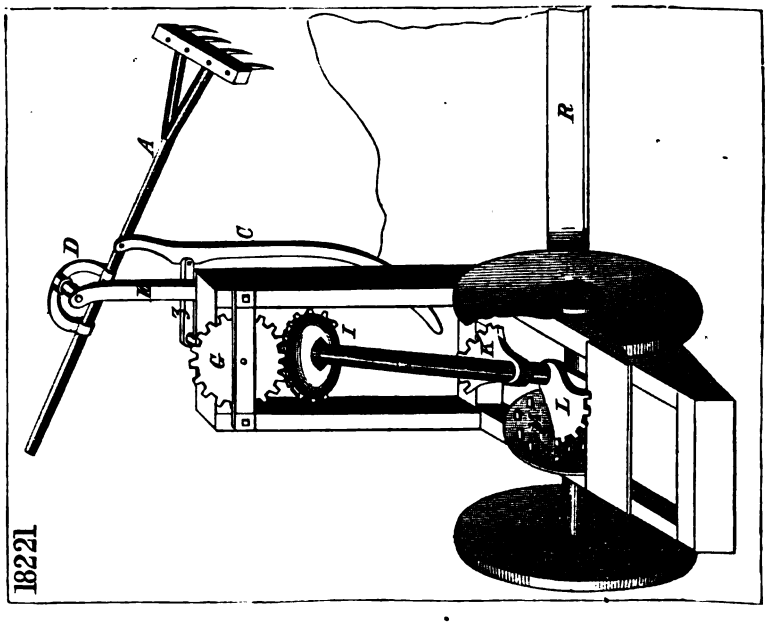

66П

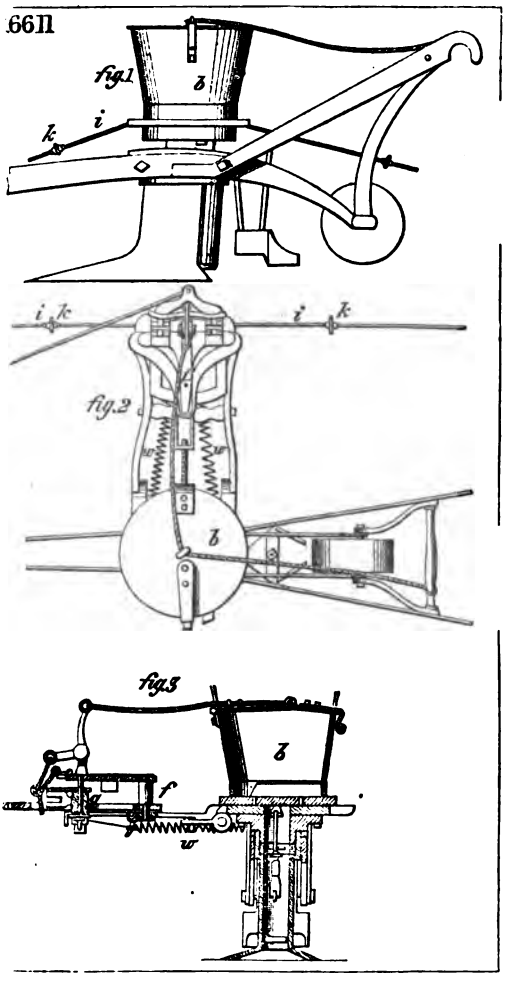

17258

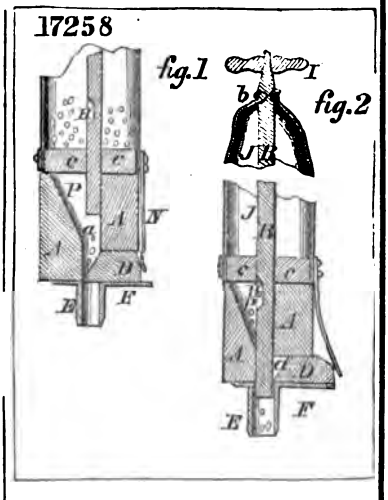

17841

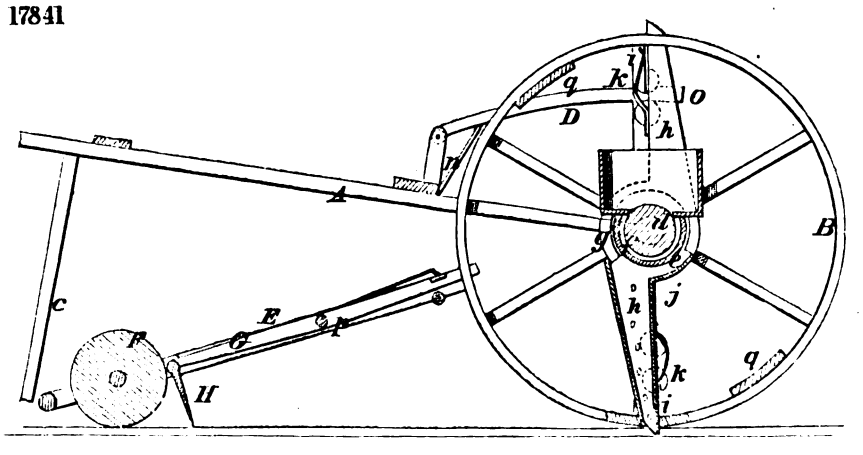

18850

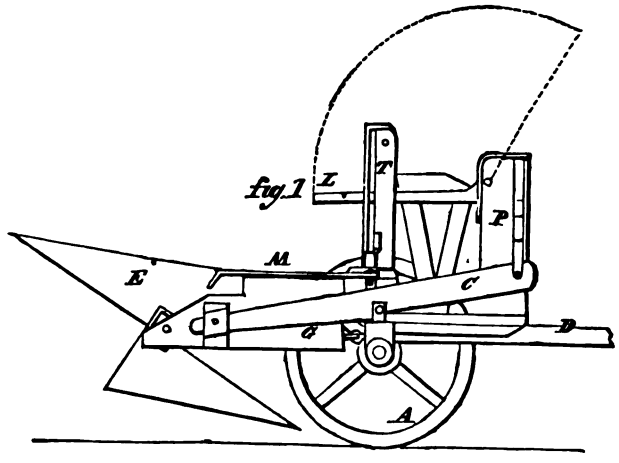

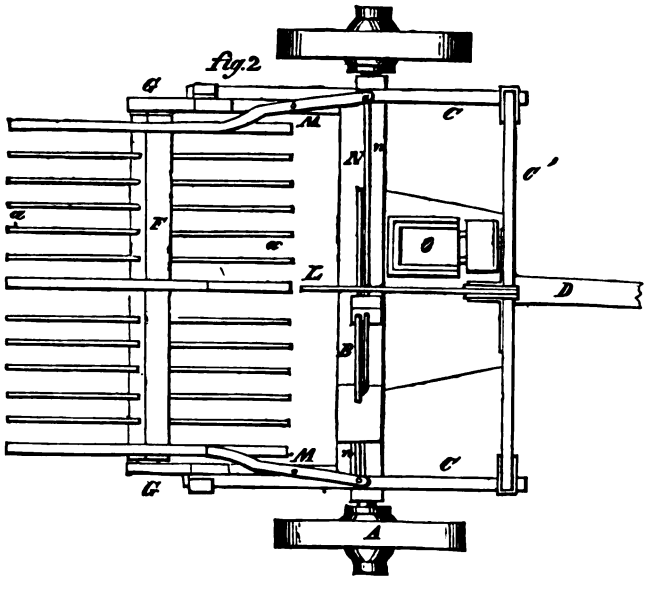

18340

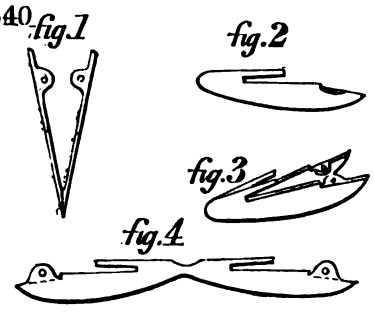

18983

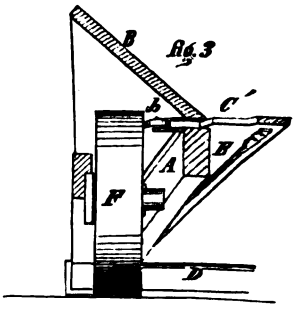

18731

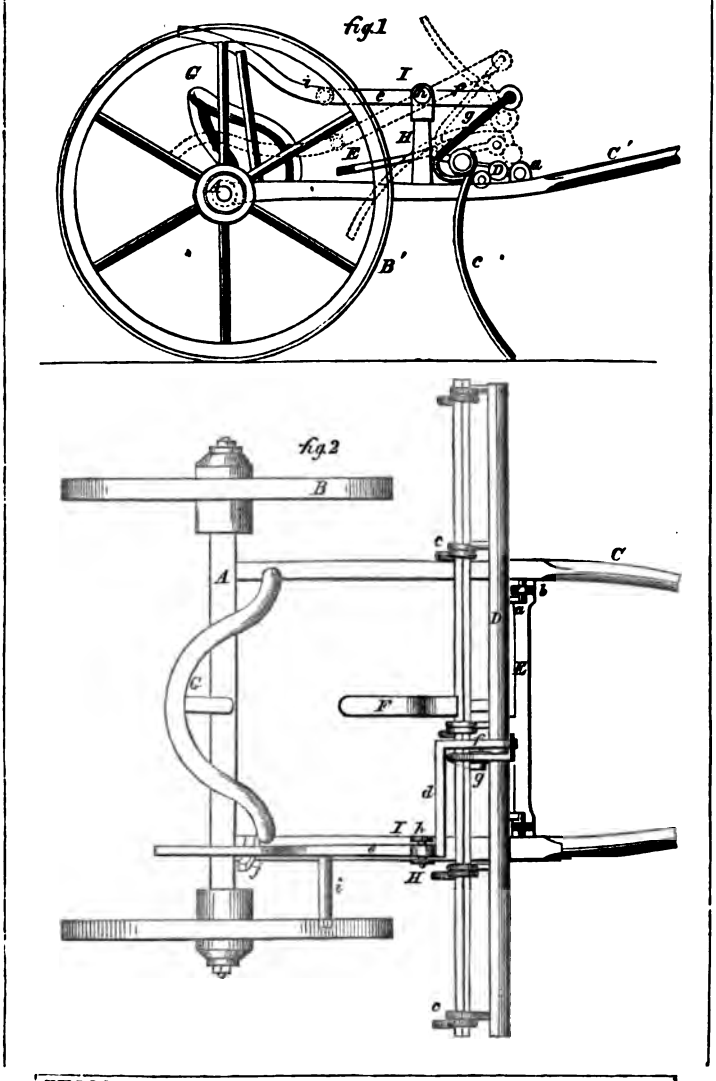

17693

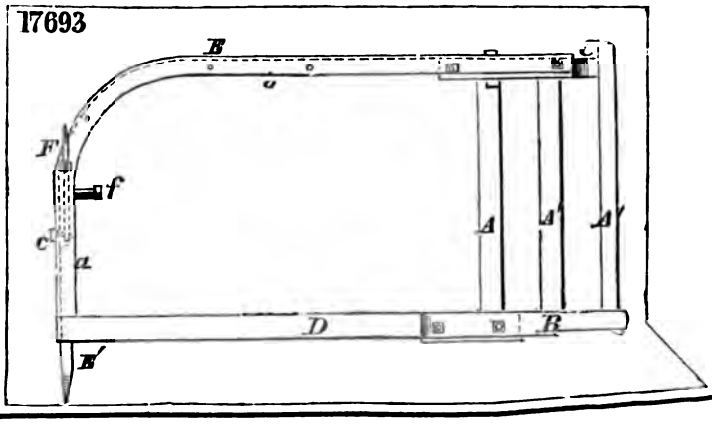

18659

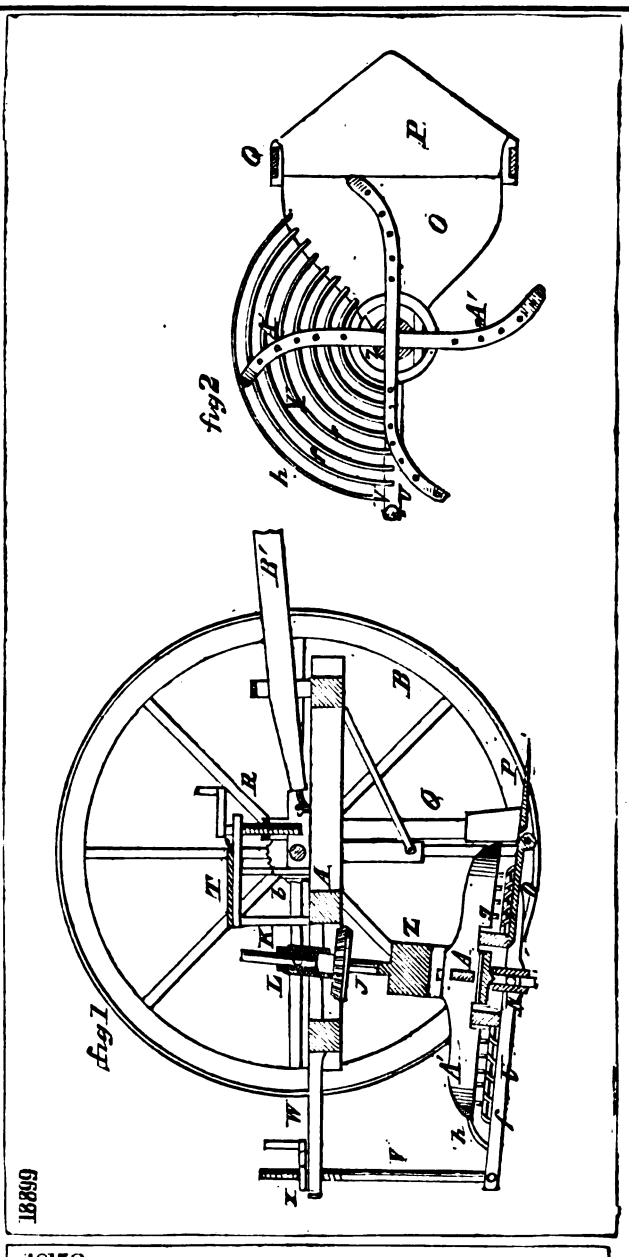

18158

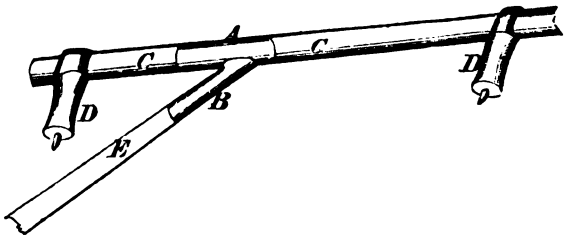

16971

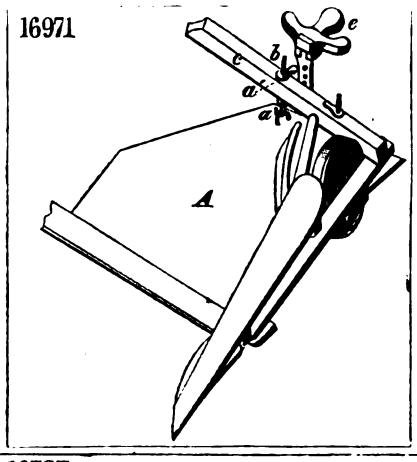

16413

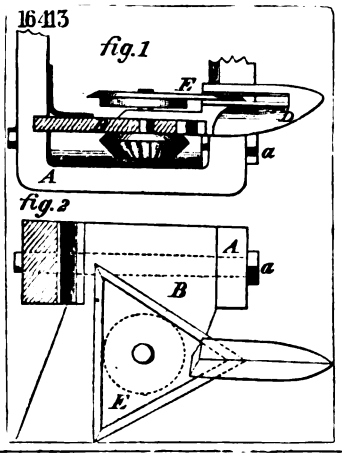

16735

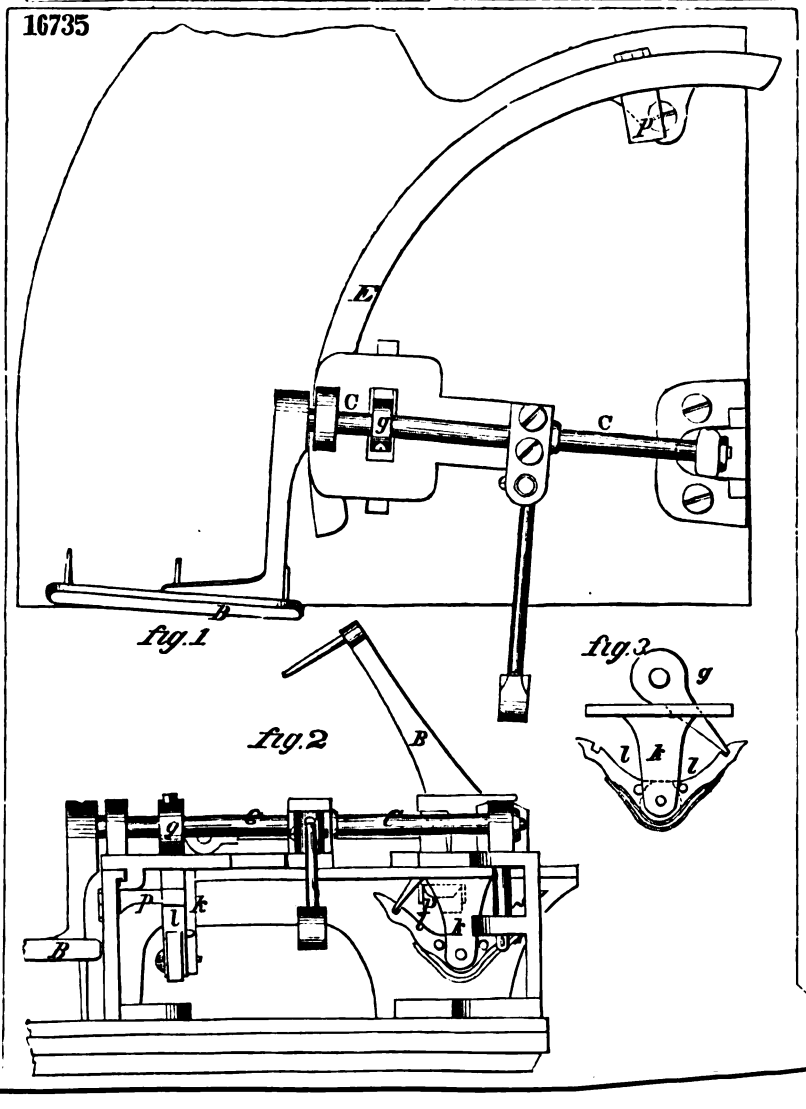

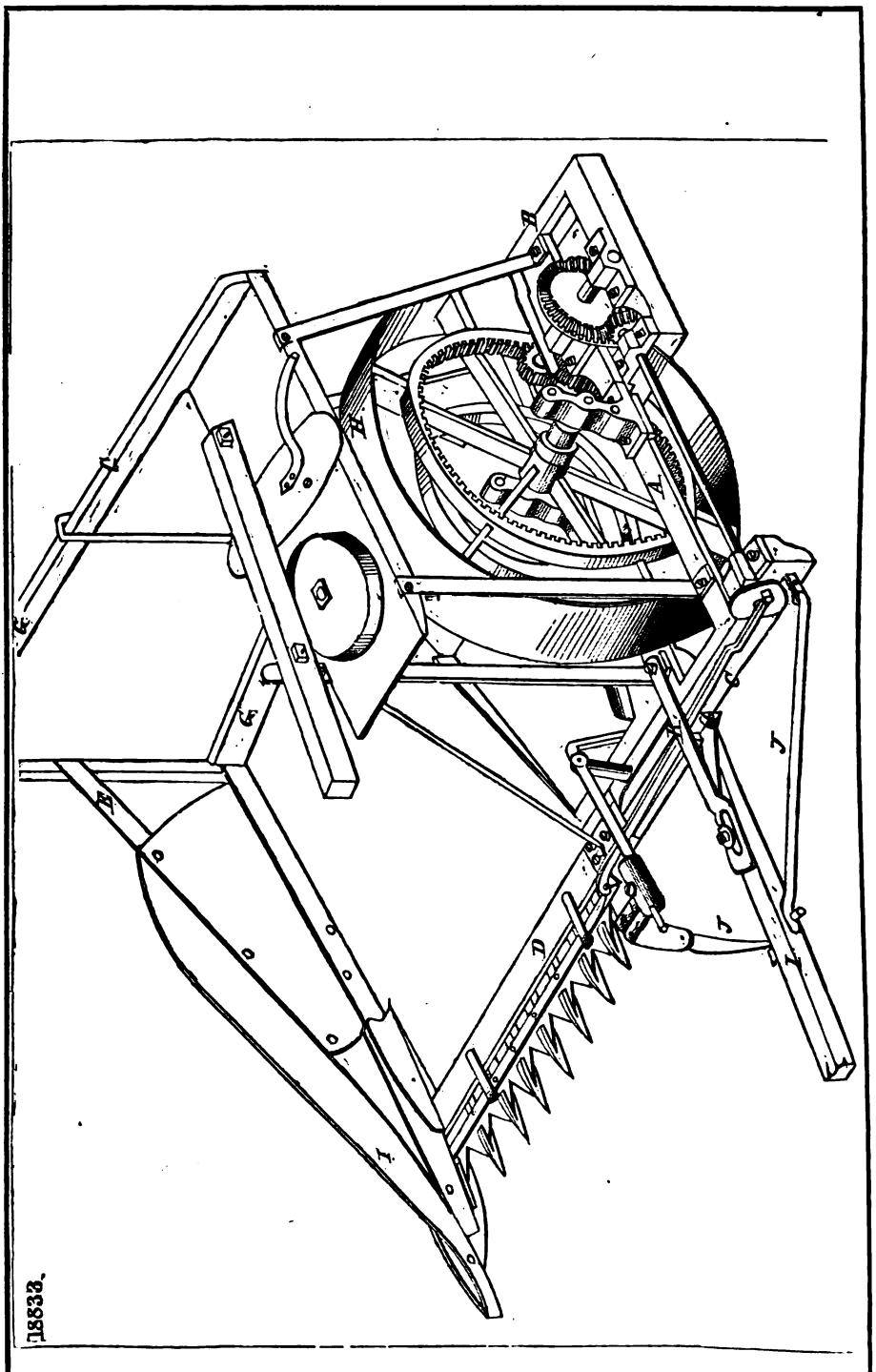
18638.

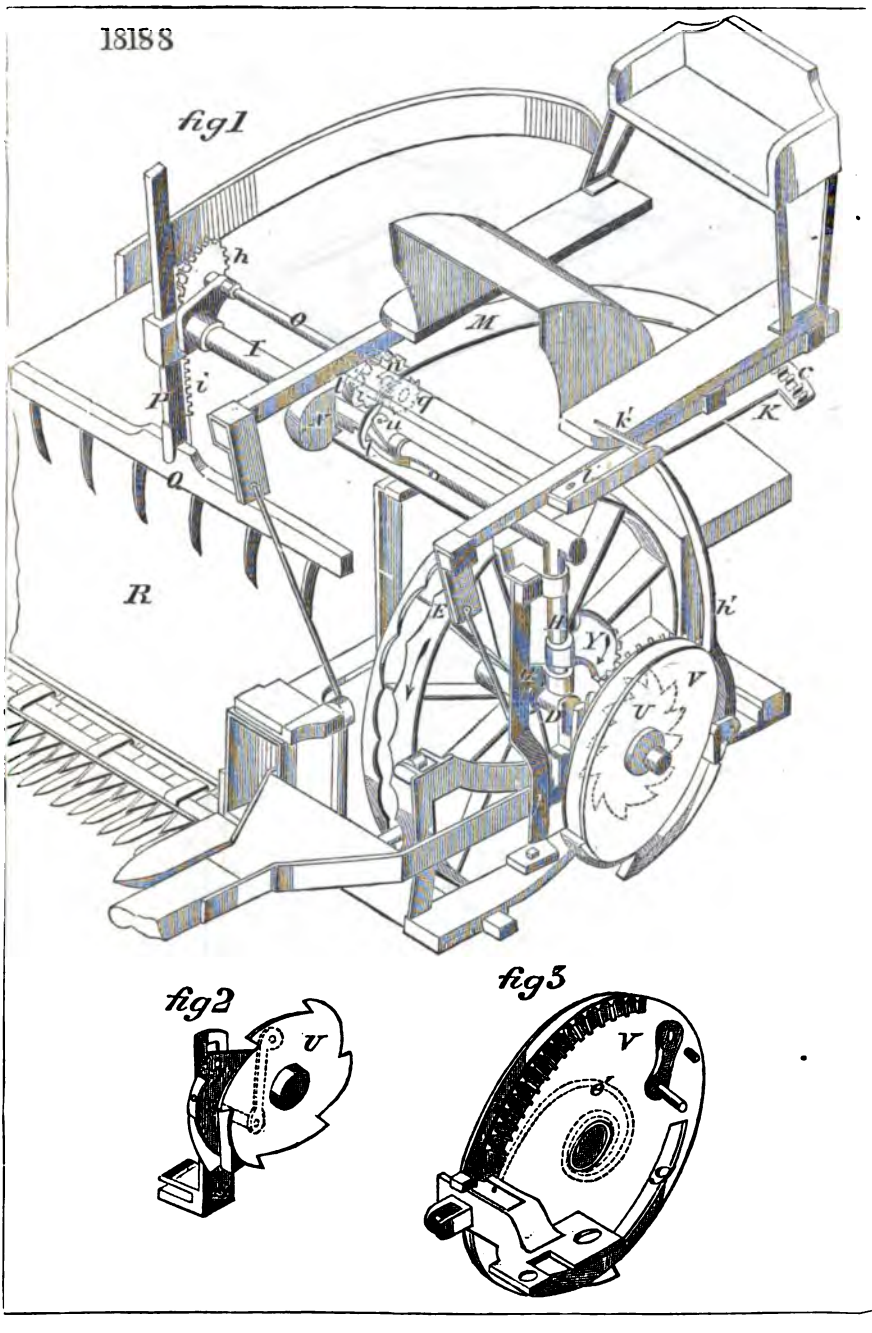
13188
fig1
h
o
I
M
i
P
k'
K
C
R
E
H
Y
h'
V
D
fig2
V
fig3
V

17772

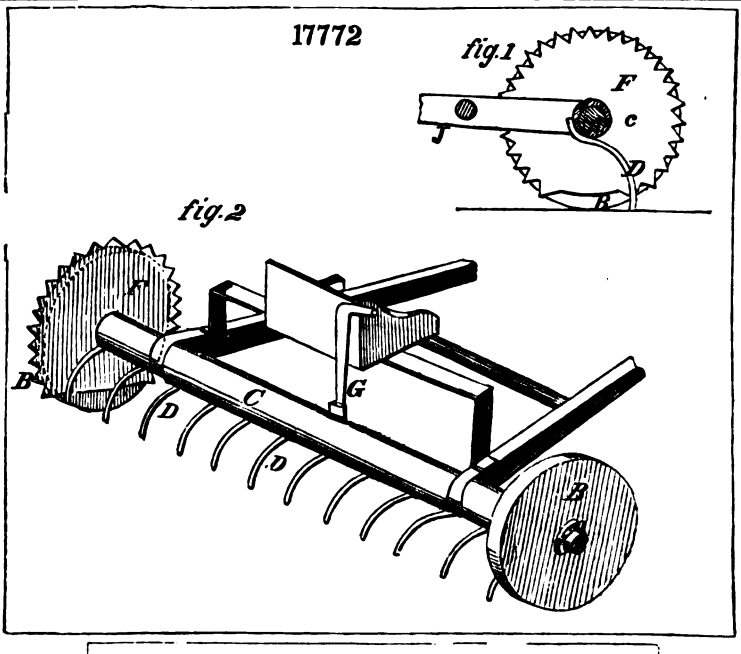

18829

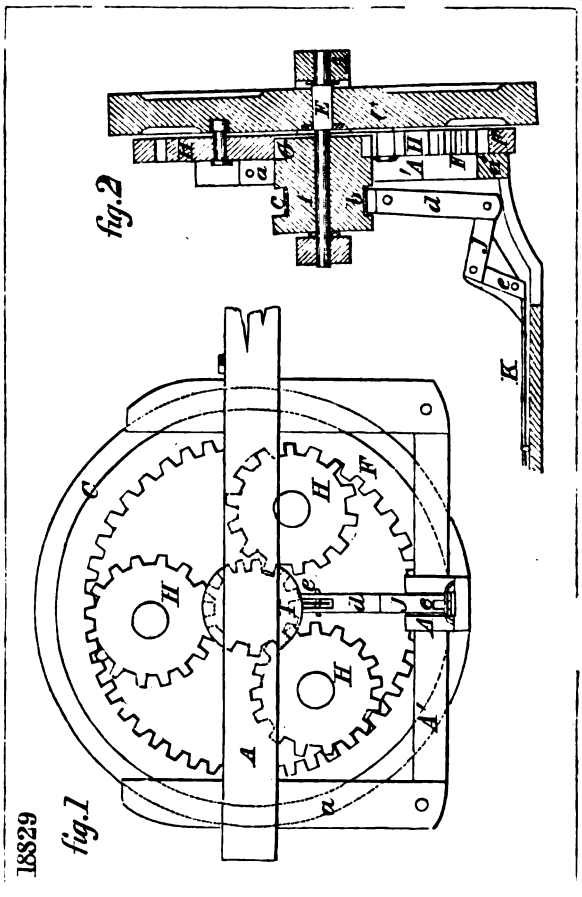

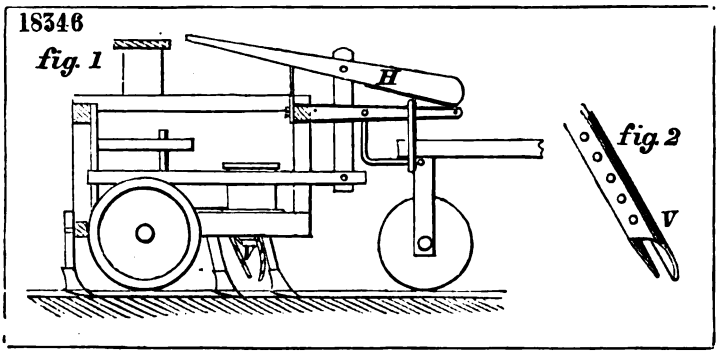
18346
fig. 1
H
fig. 2
V

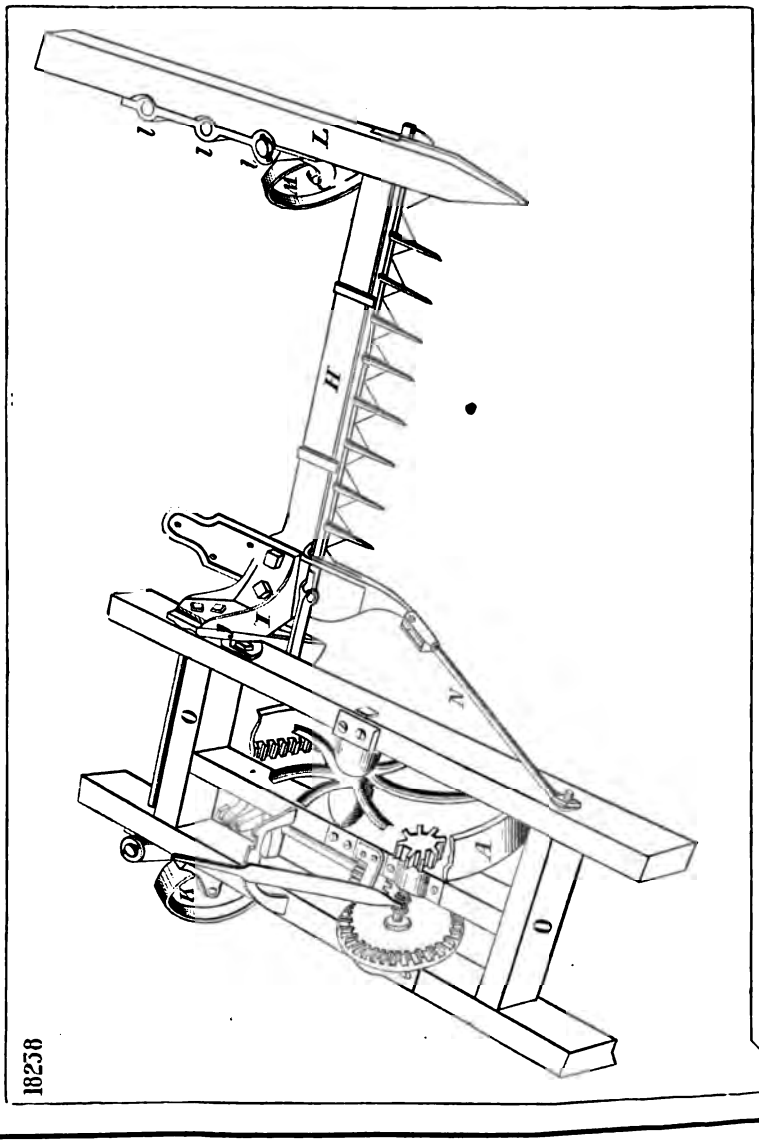
18238
L
l
l
l
H
I
O
N
A
O
K

17350

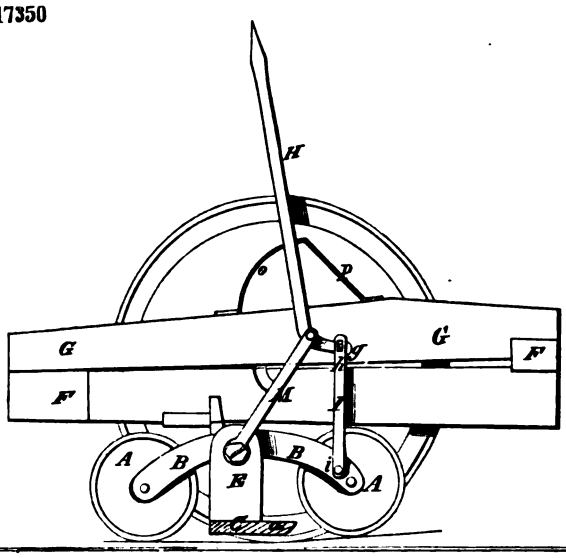

18119

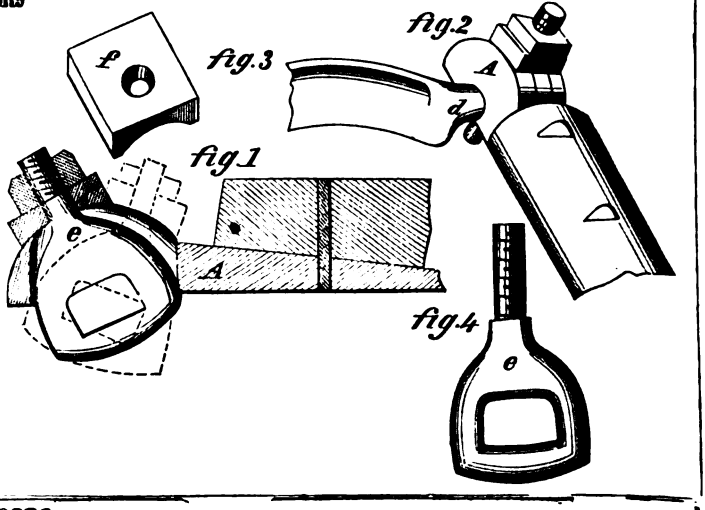

18326

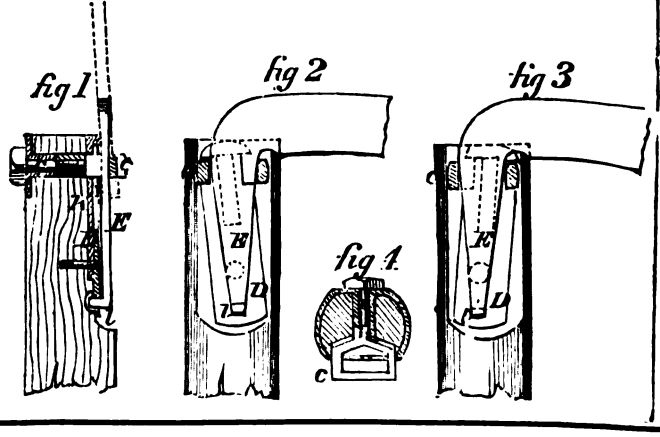

18492

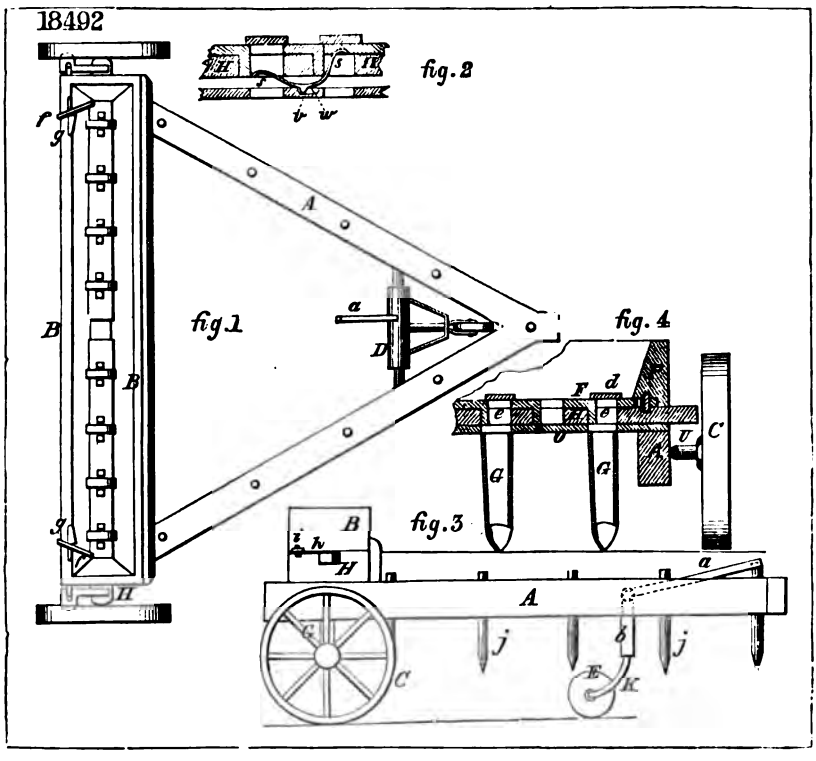

18735

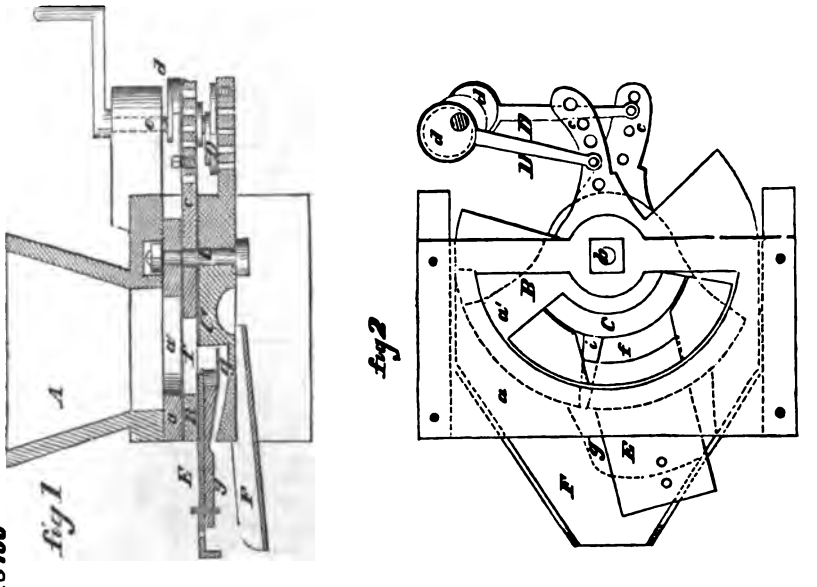

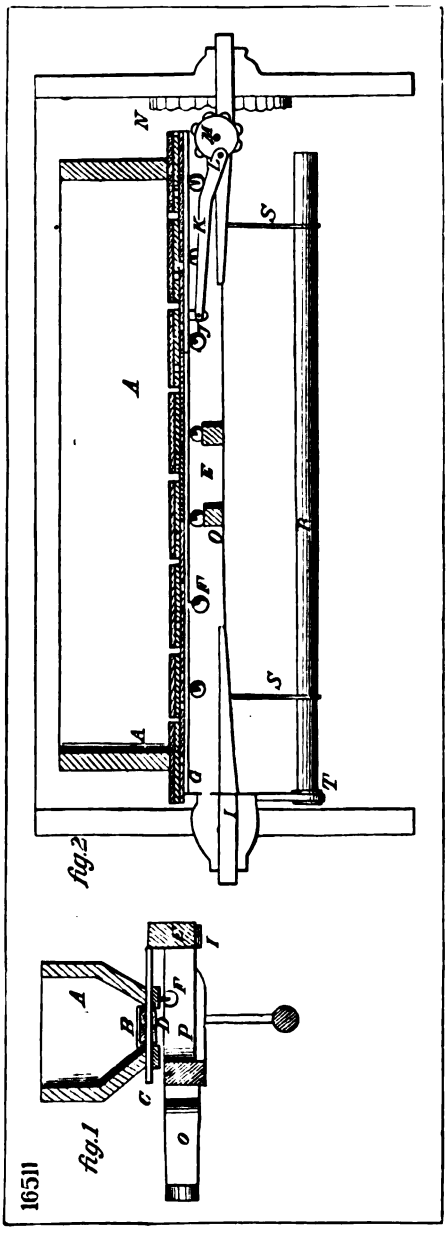
16511
fig.1
fig.2

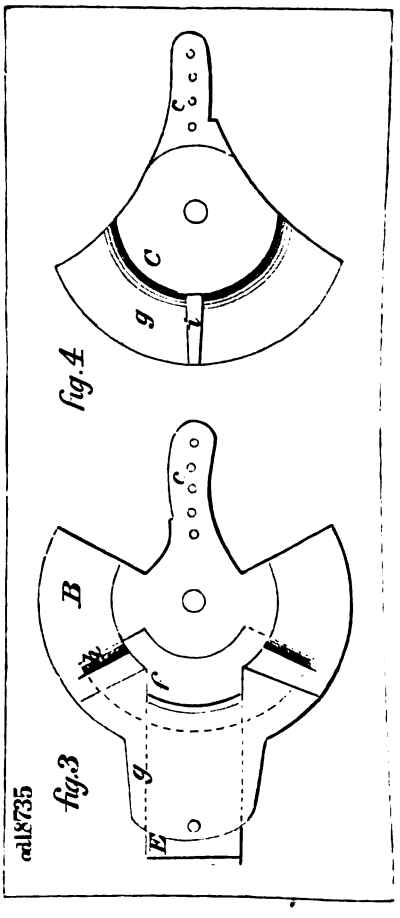
ad18735
fig.3
fig.4

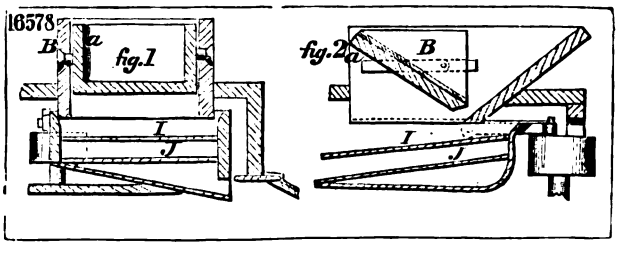
16578
fig.1
fig.2

18856

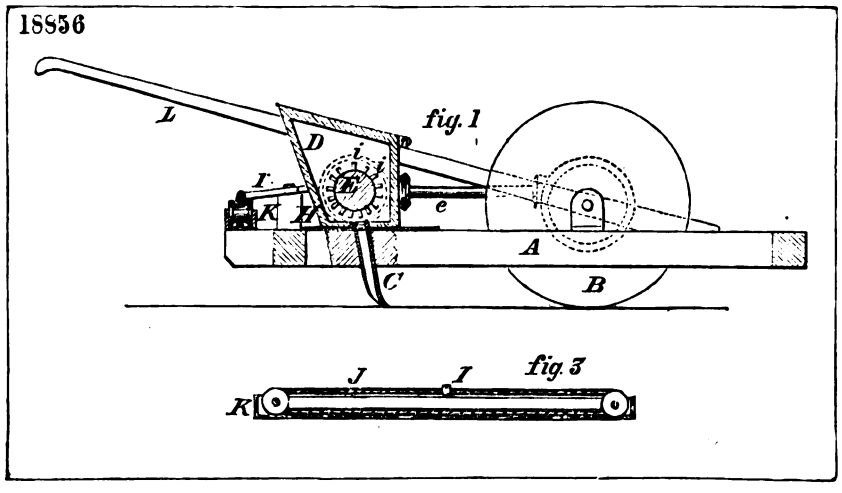

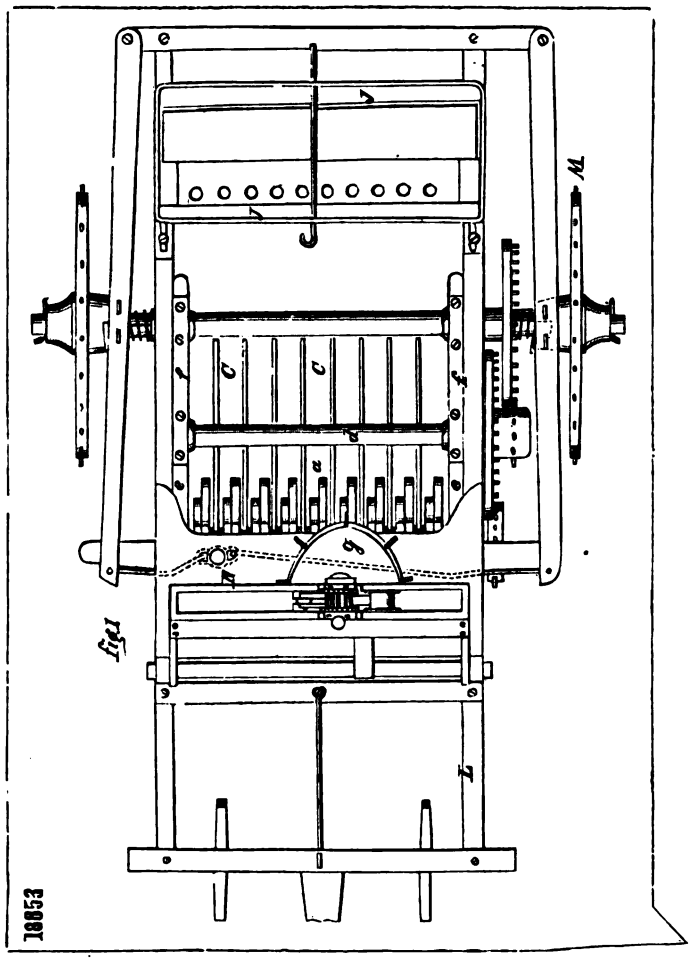

18853

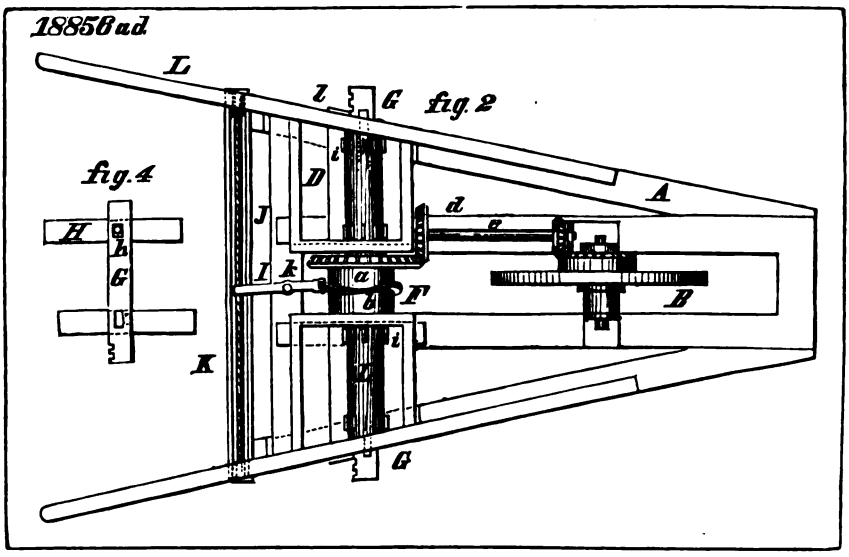
18856ad
fig. 2
fig. 4
L
A
B
D
F
G
H
I
J
K

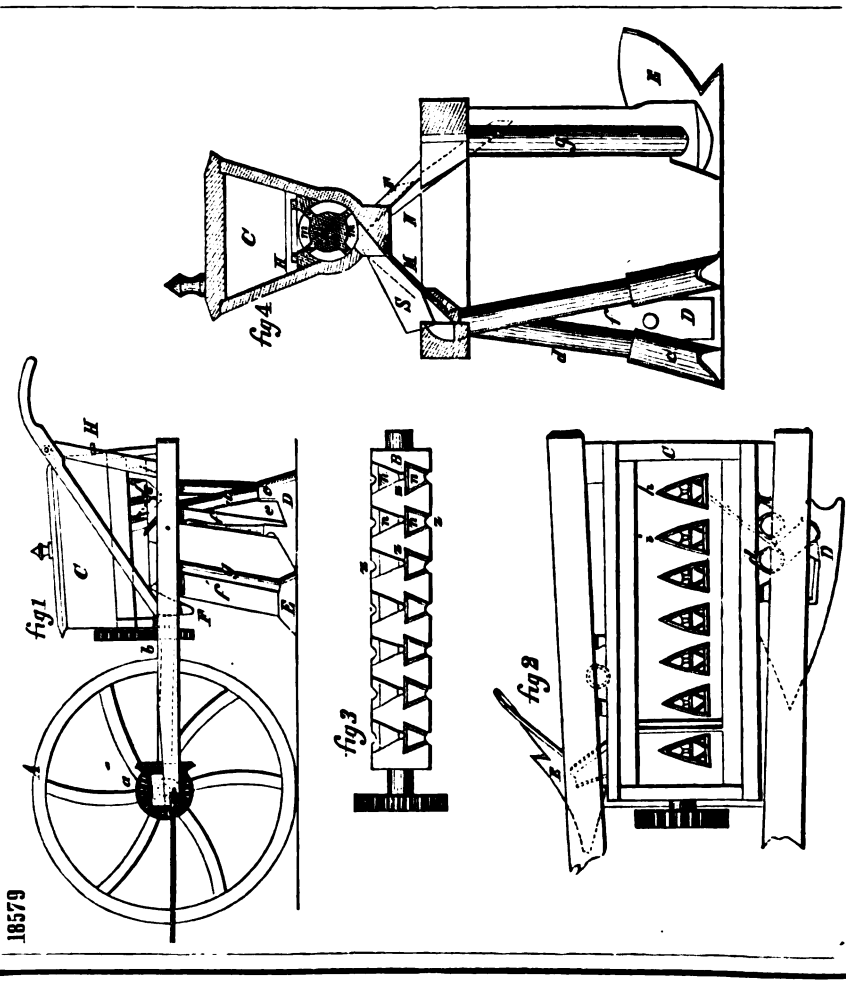
18579
fig 1
fig 2
fig 3
fig 4

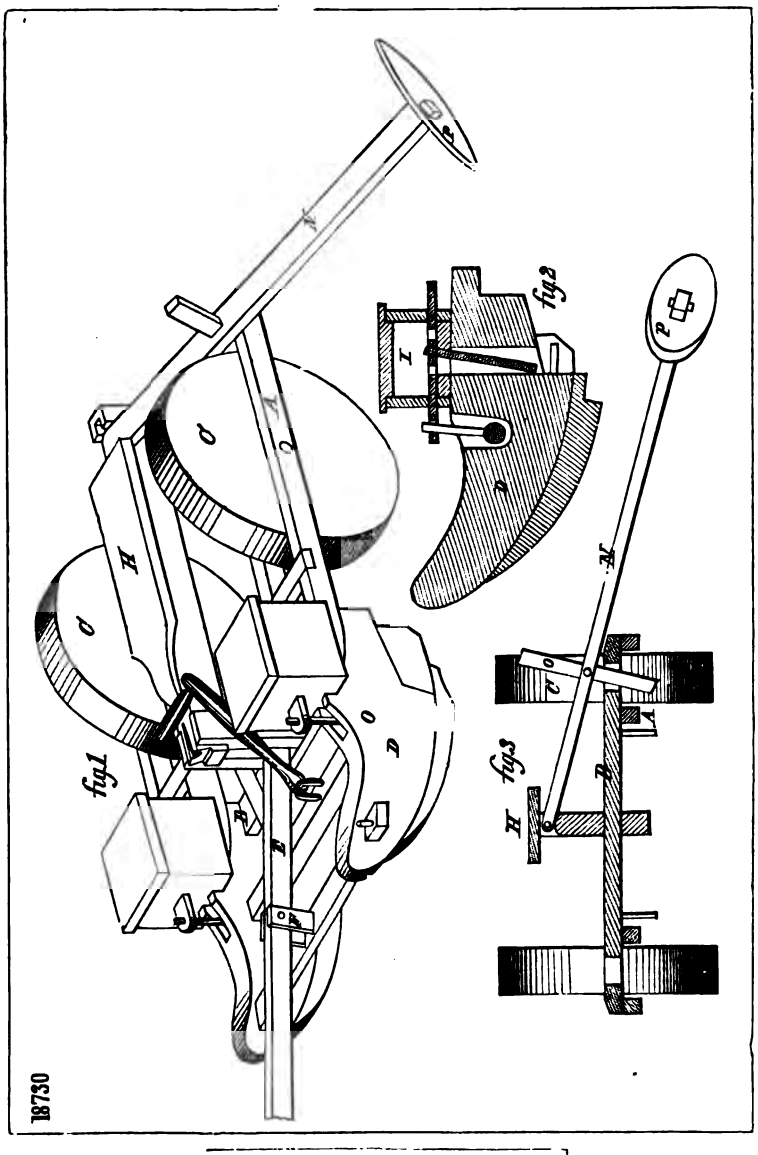
18730
fig.1
fig.2
fig.3

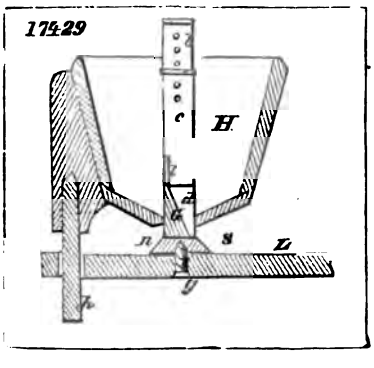
17429

18982

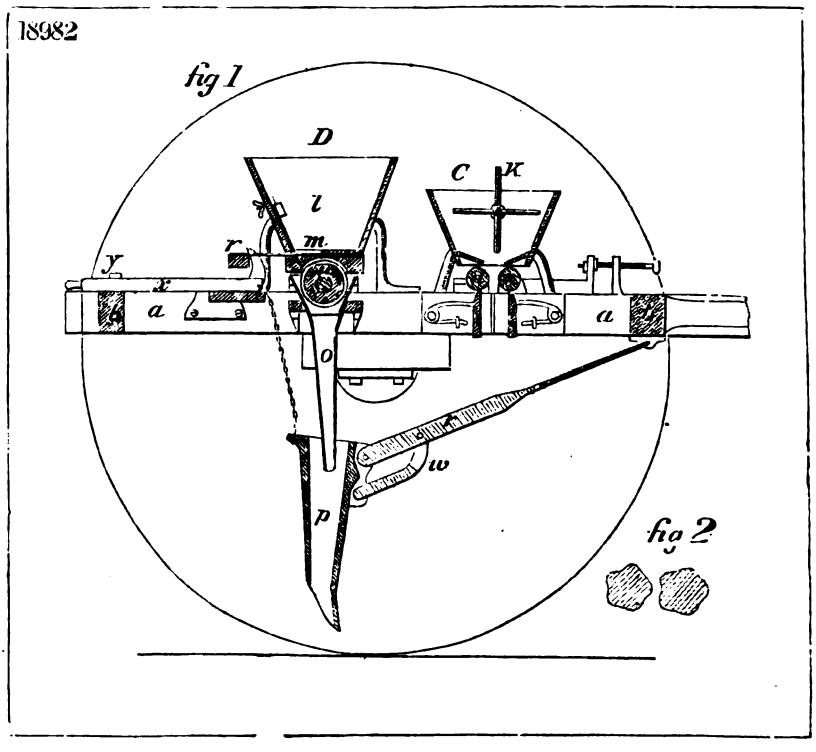
fig 1
D
C
K
l
m
r
y
x
a
a
o
w
p
fig 2

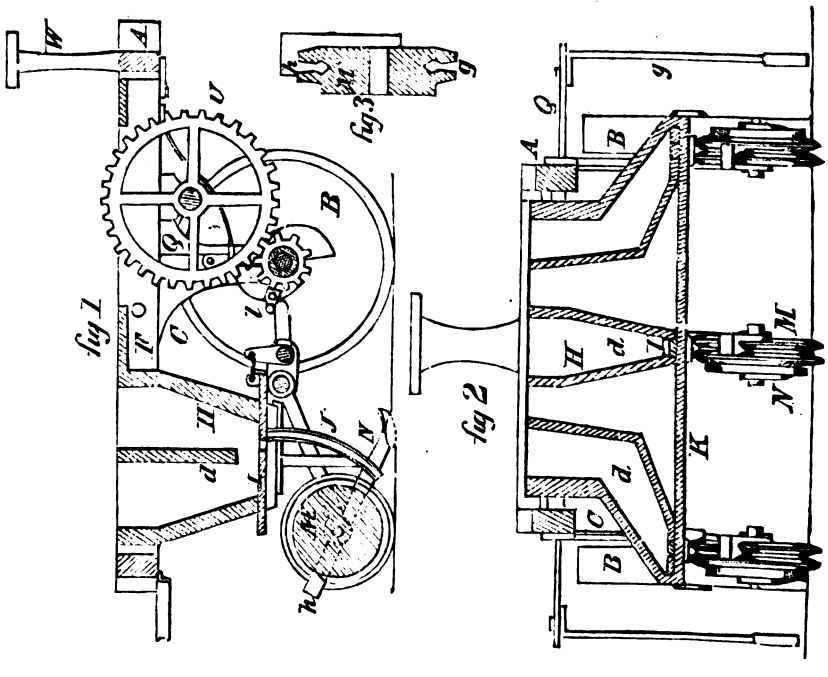
W
A
V
B
fig 3
g
fig 1
C
H
d
J
N
h
fig 2
A
Q
B
g
H
d
L
M
N
K
d
C
B

8978

18525

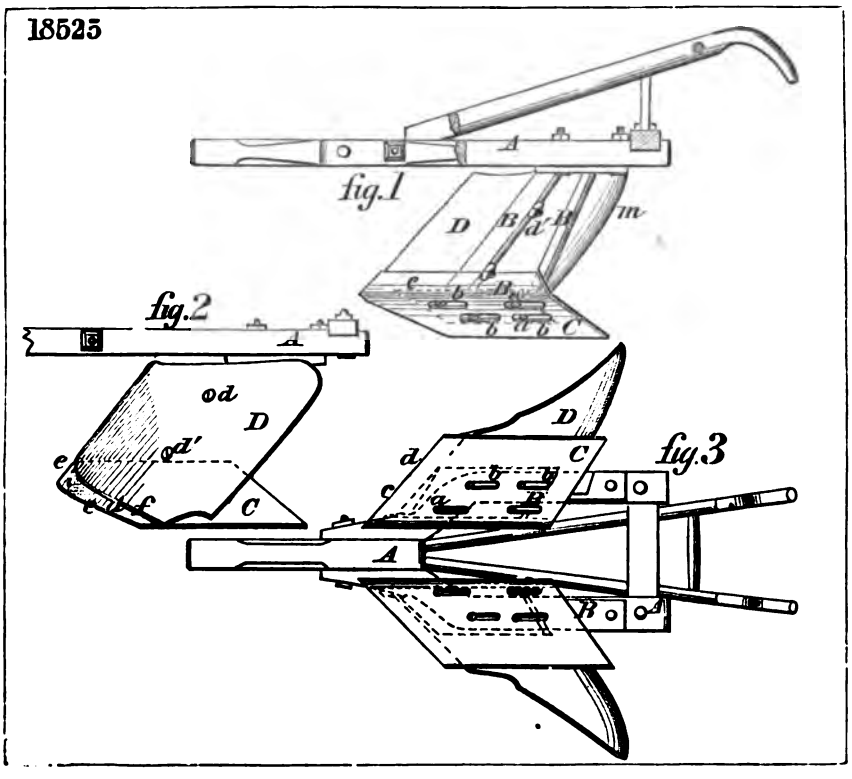

18716

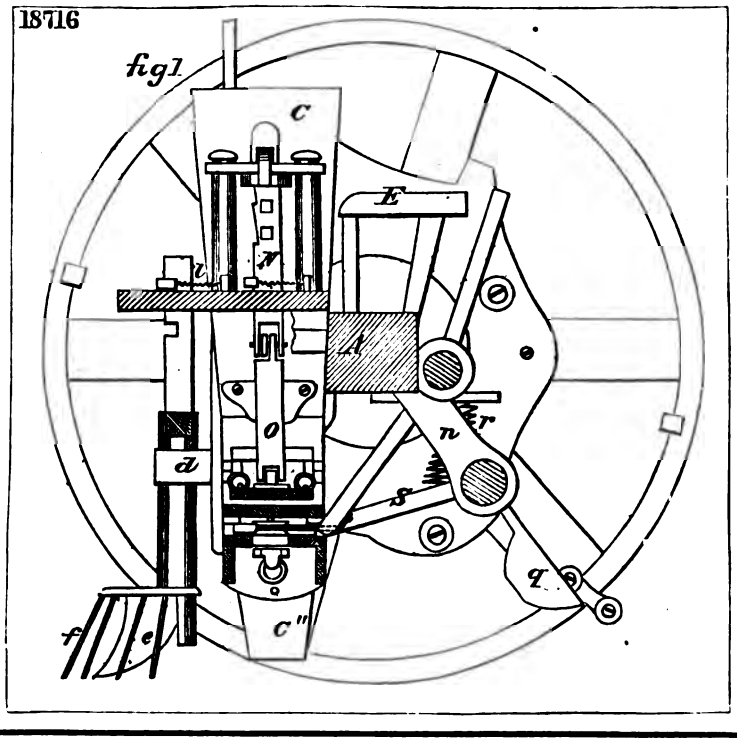

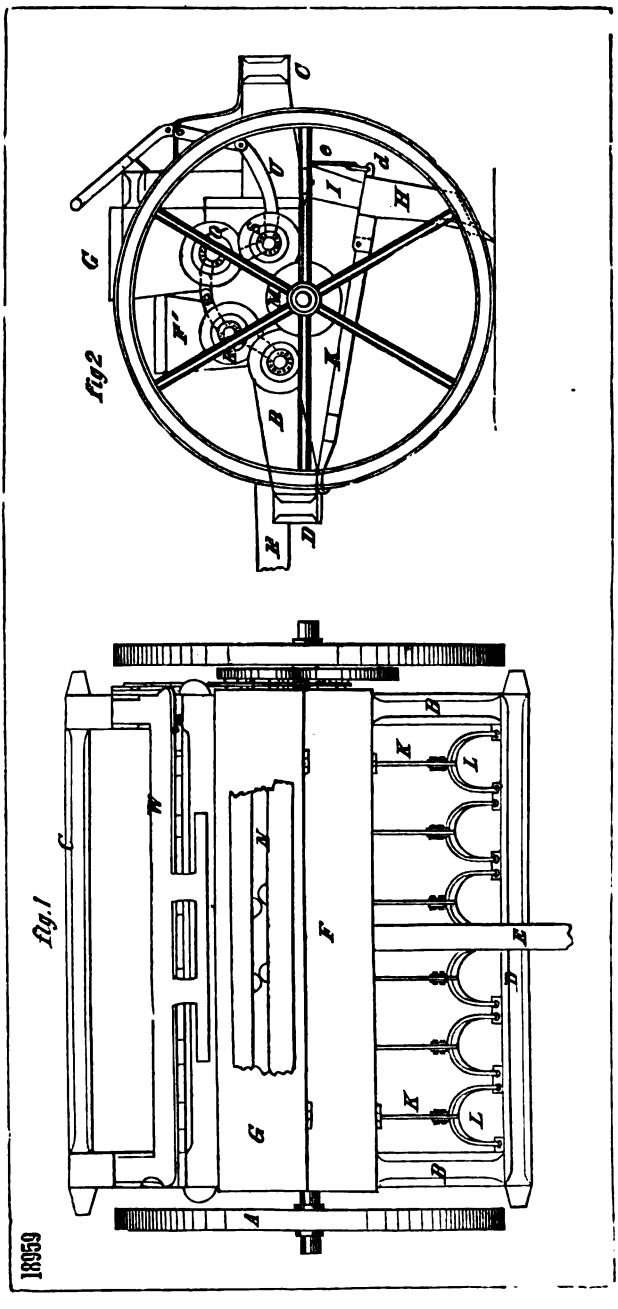
Fig. 1
Fig. 2
18959

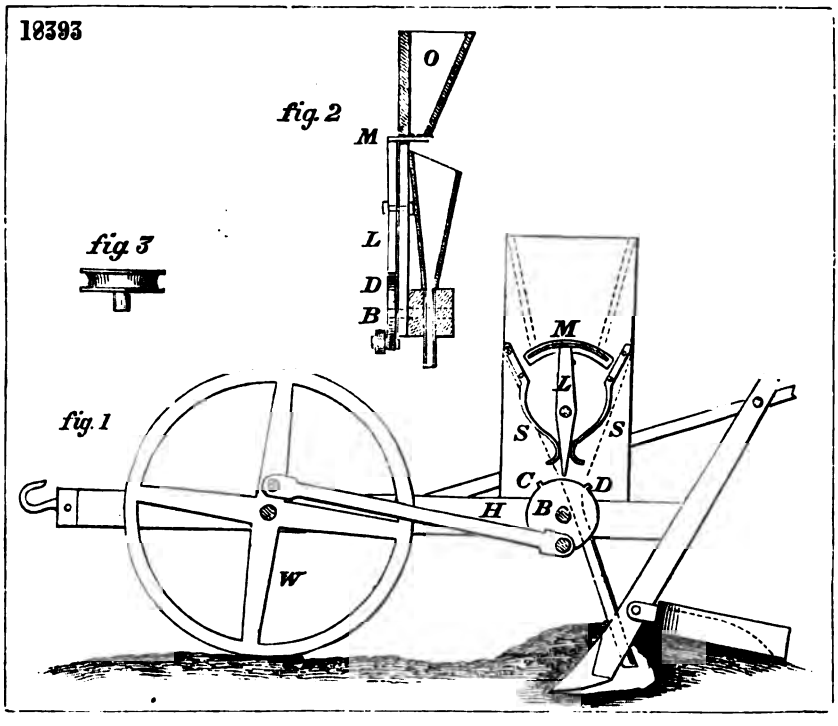
18393
fig. 1
fig. 2
fig. 3
O
M
L
D
B
S
C
H
W

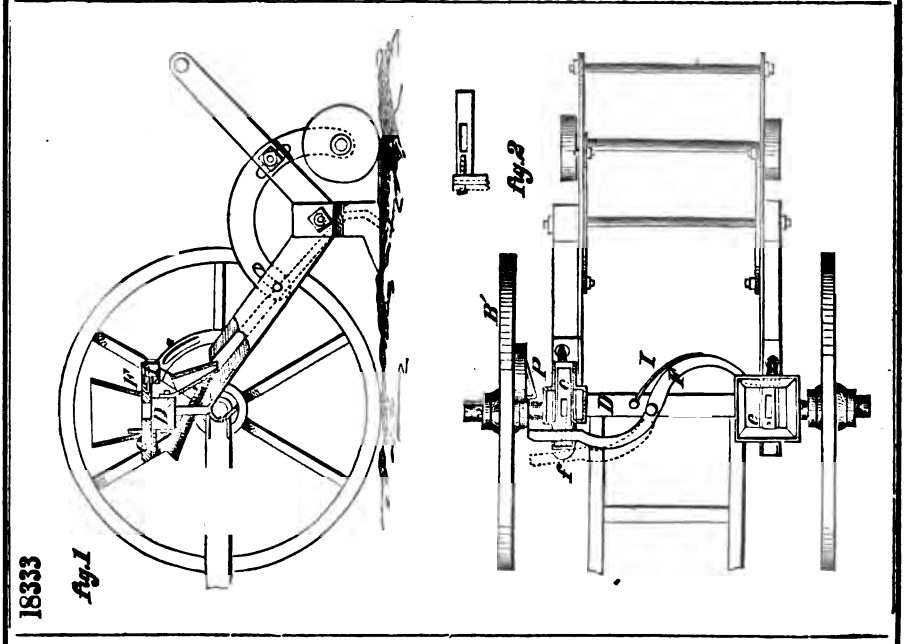
18333
fig. 1
fig. 2
I

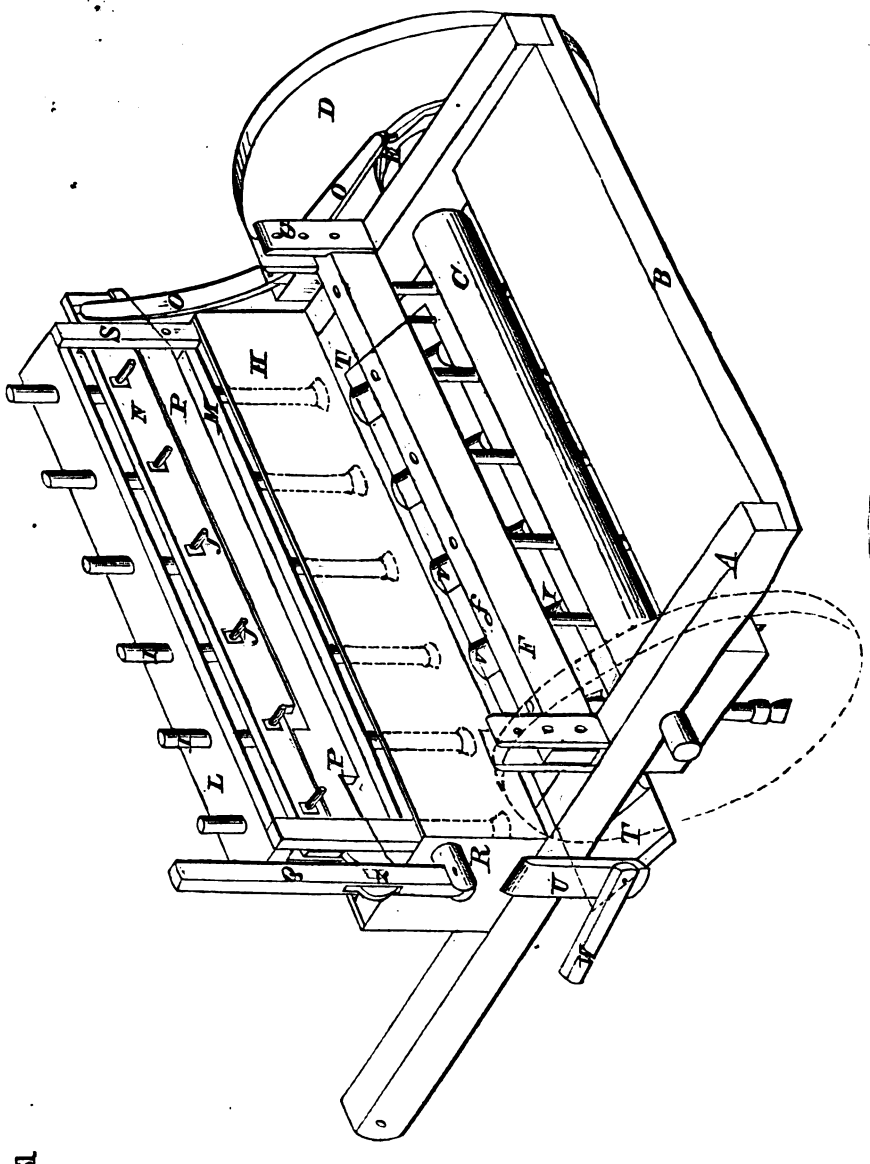

1888.

18846

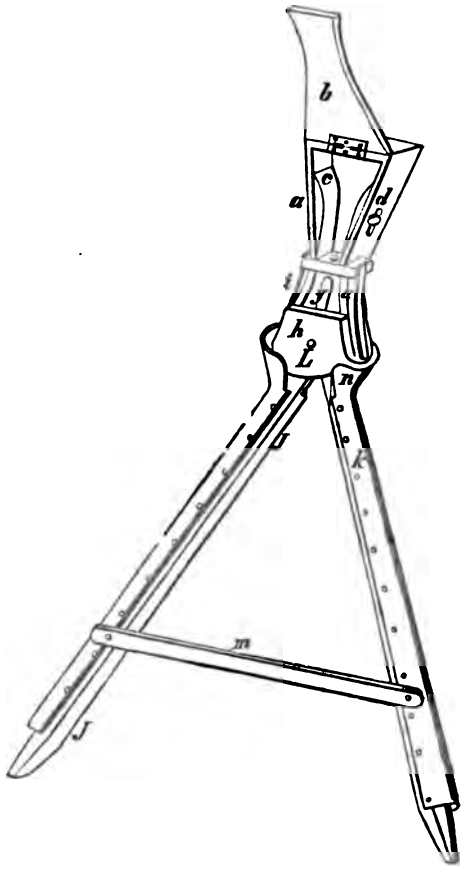

18366

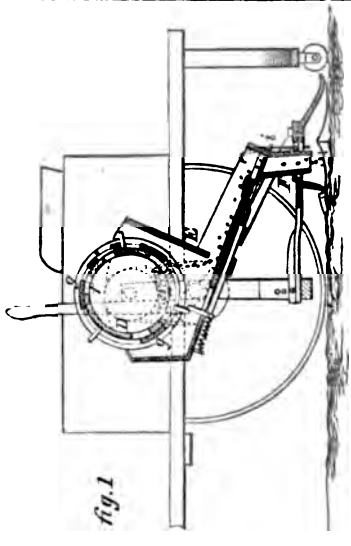

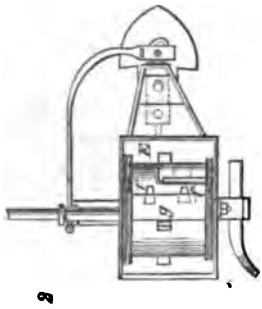

17305

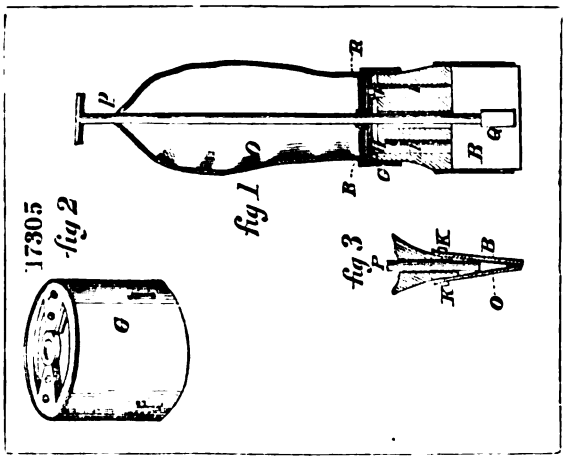

17566

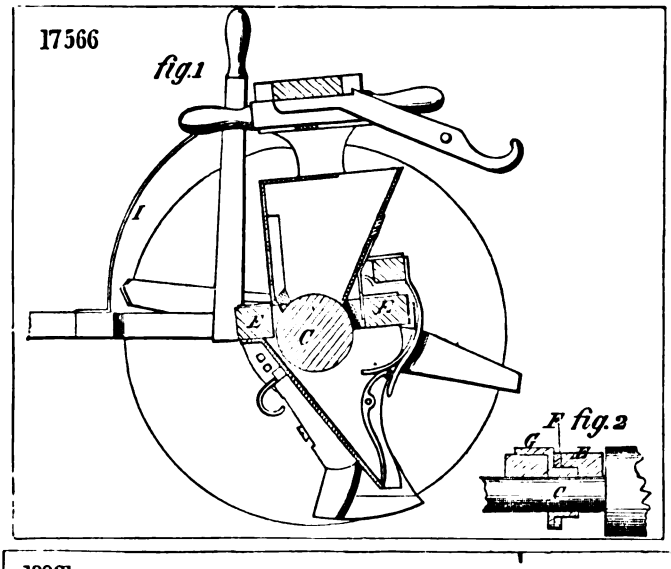

18821

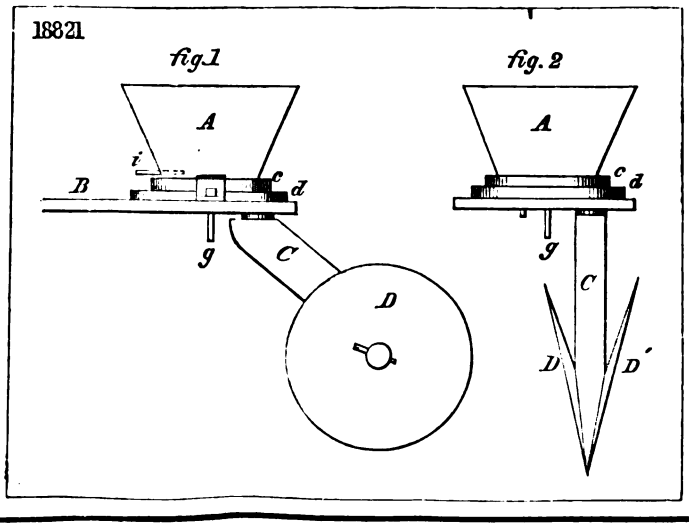

18802

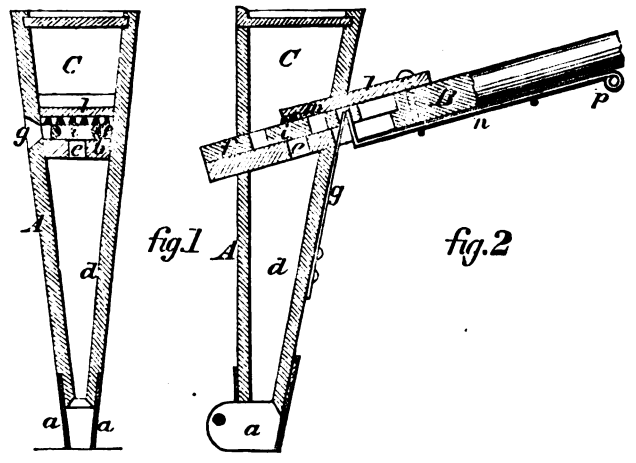

17260

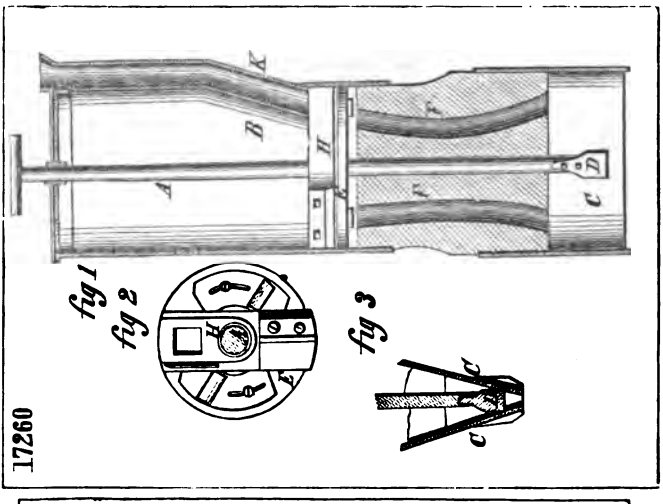

18843

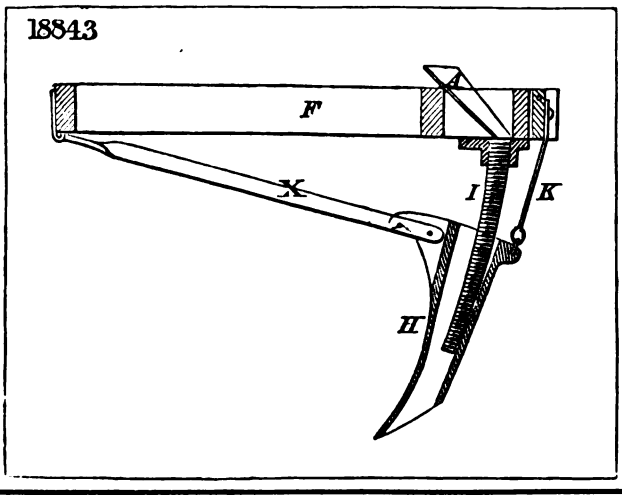

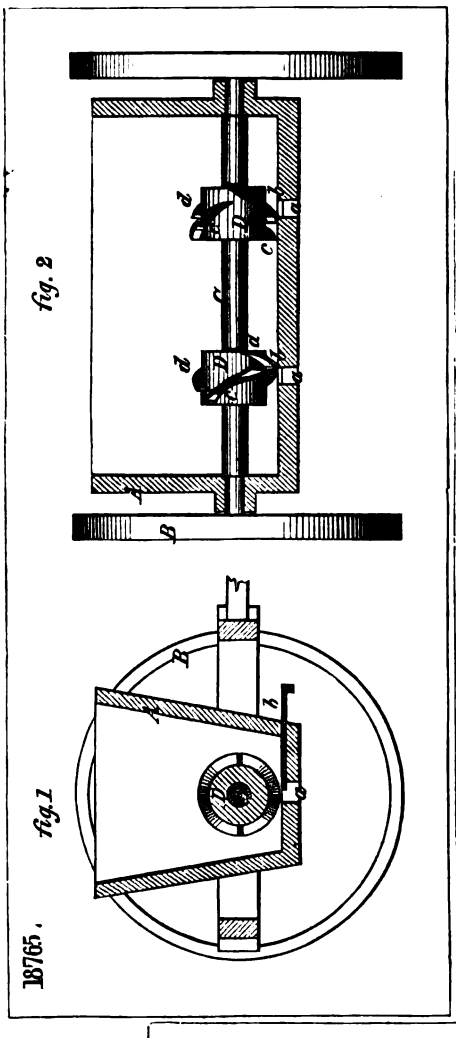
18765.
fig. 1
fig. 2

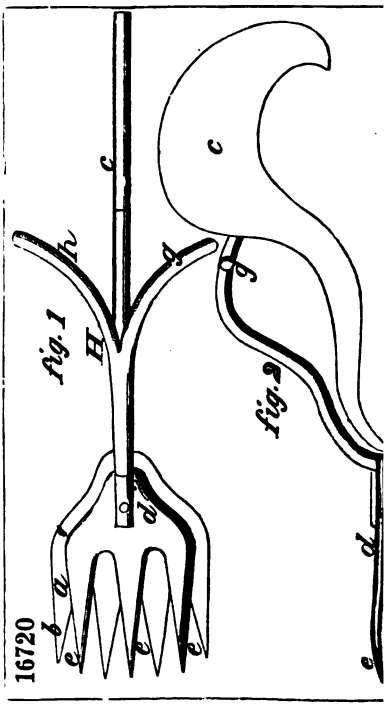
16720
fig. 1
fig. 2

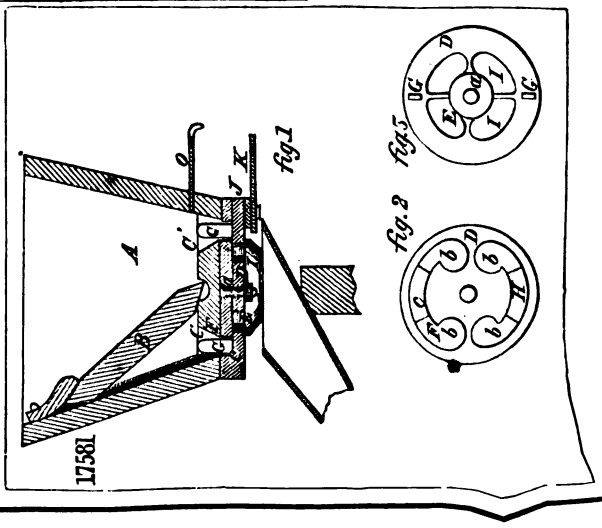
17581
fig. 1
fig. 2
fig. 5

16617

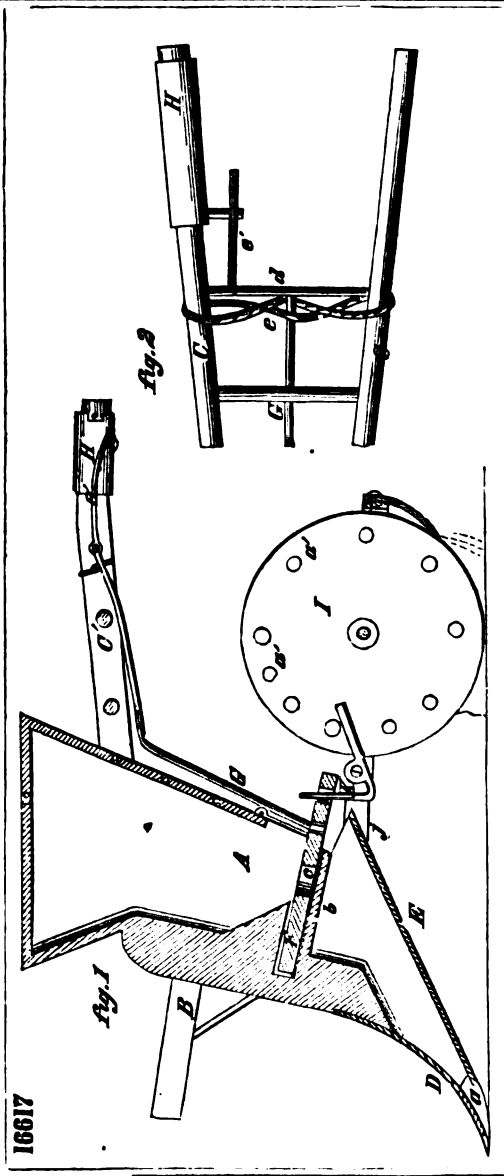

17081

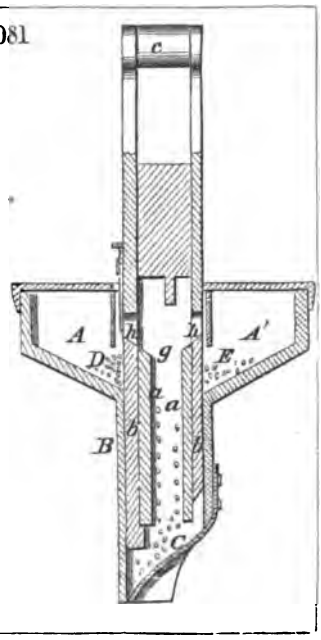

18344

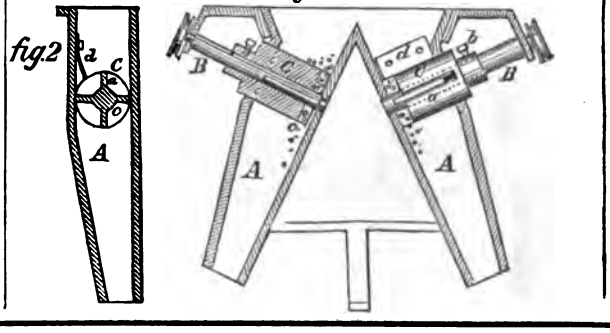

18762

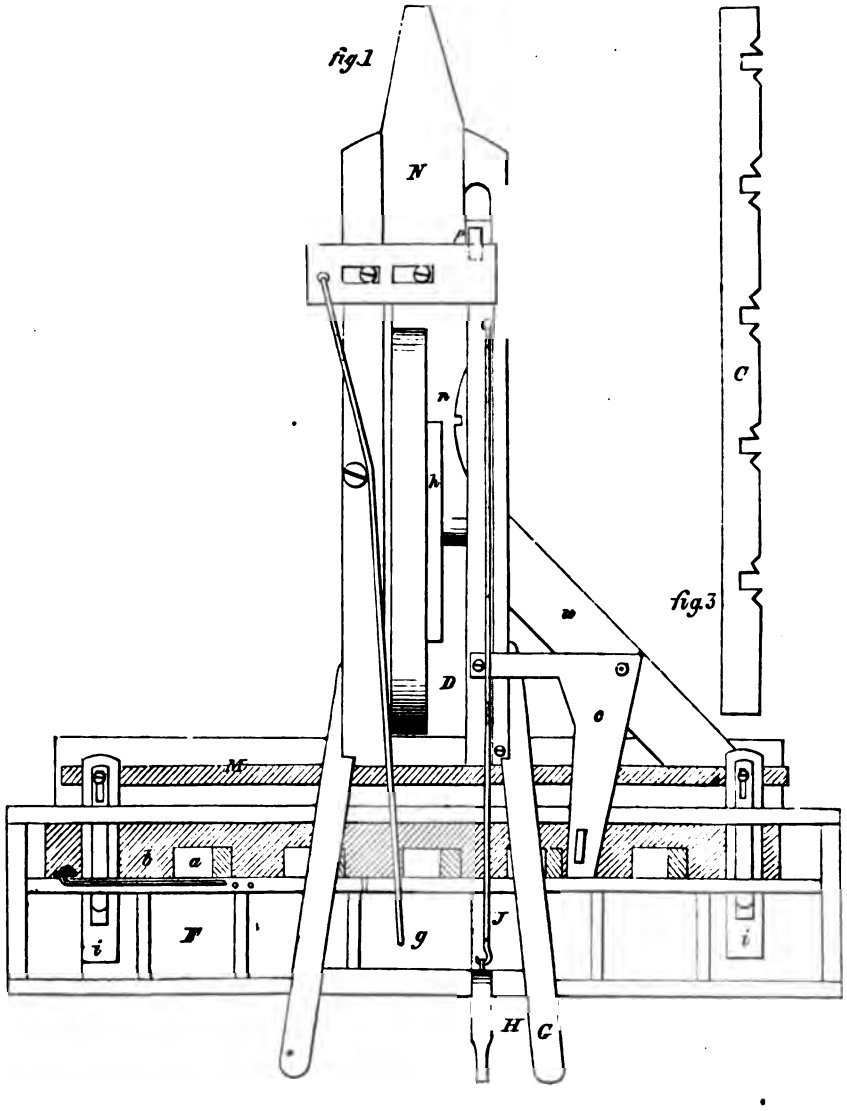

16597

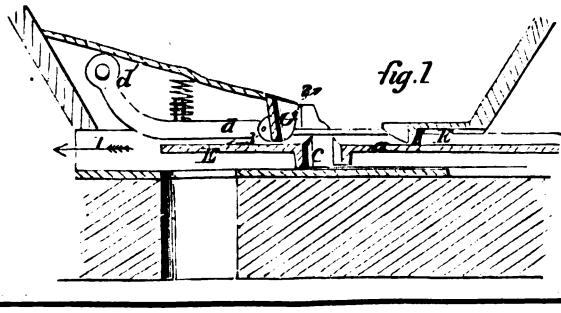

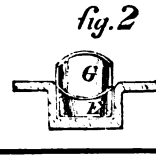

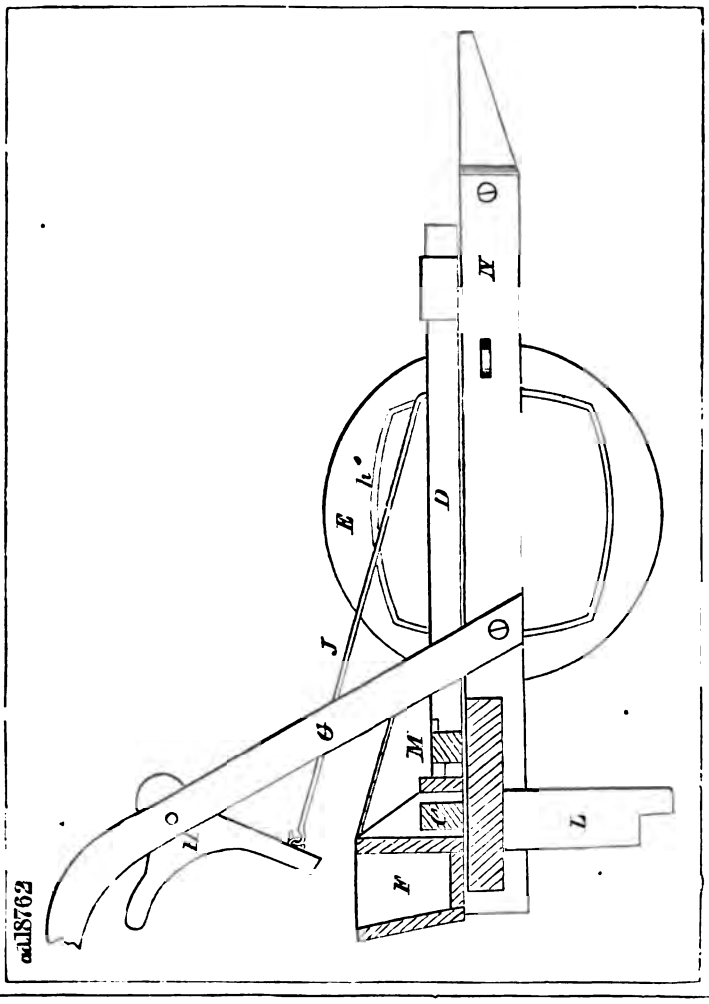
a.18762
N
D
E
h'
J
G
M
L
F'

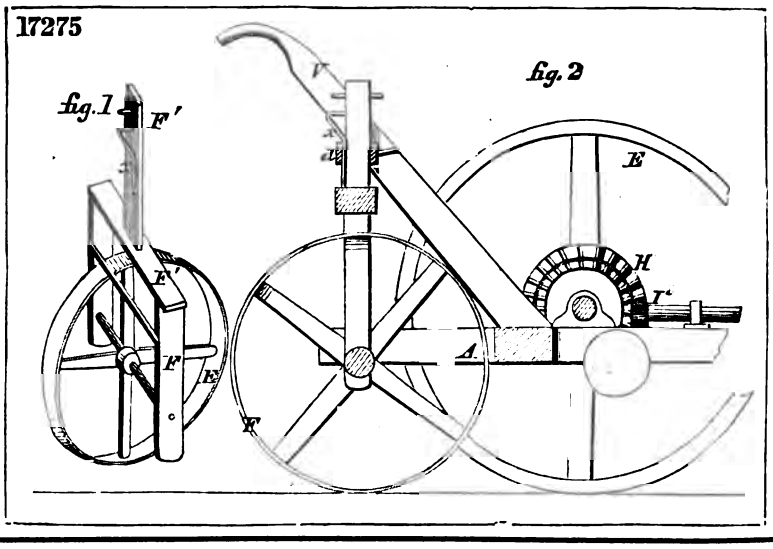
17275
fig. 1
F'
F
E
fig. 2
E
H
I
A
F

18479

fig.1

fig.2

17839

fig.1

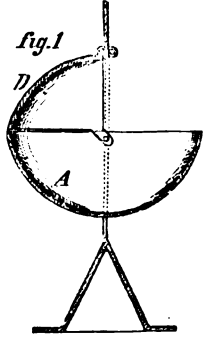

fig.2

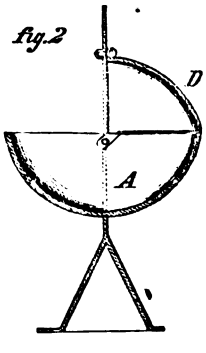

18334

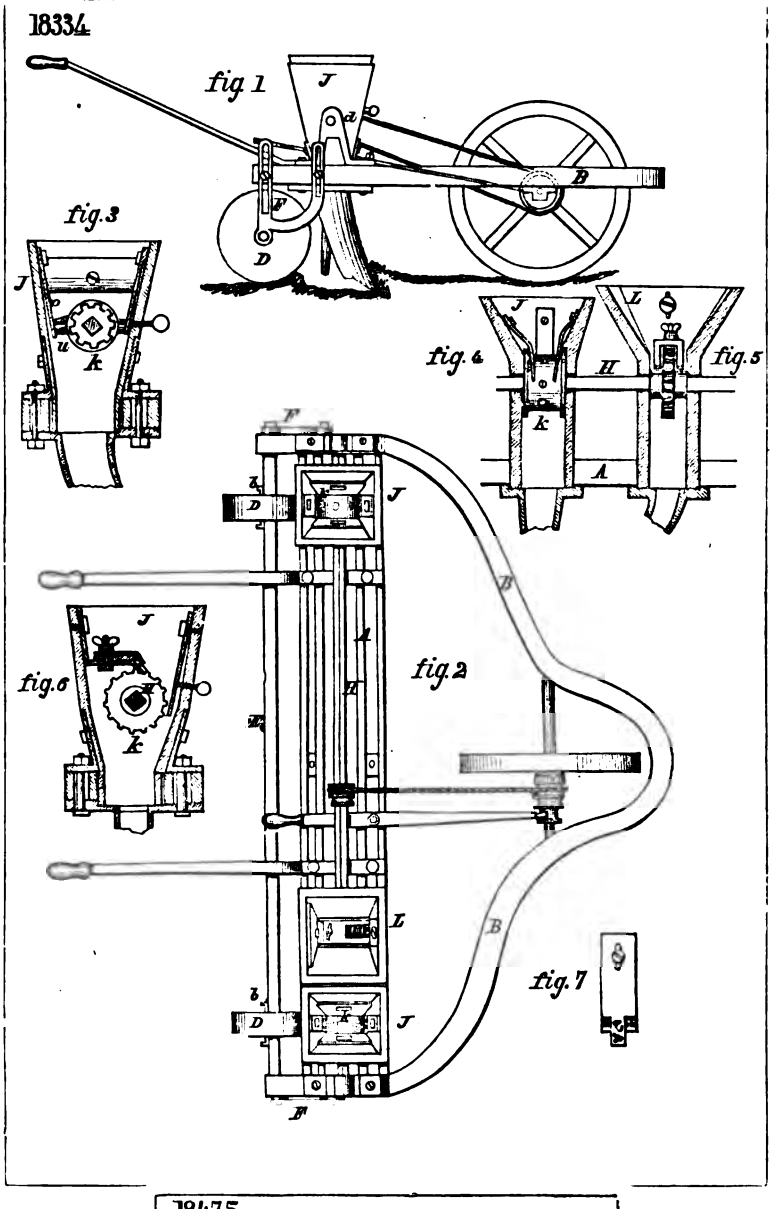

18475

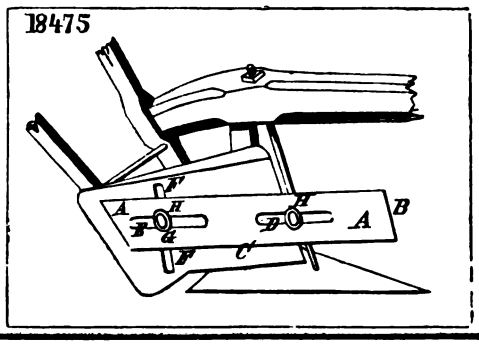

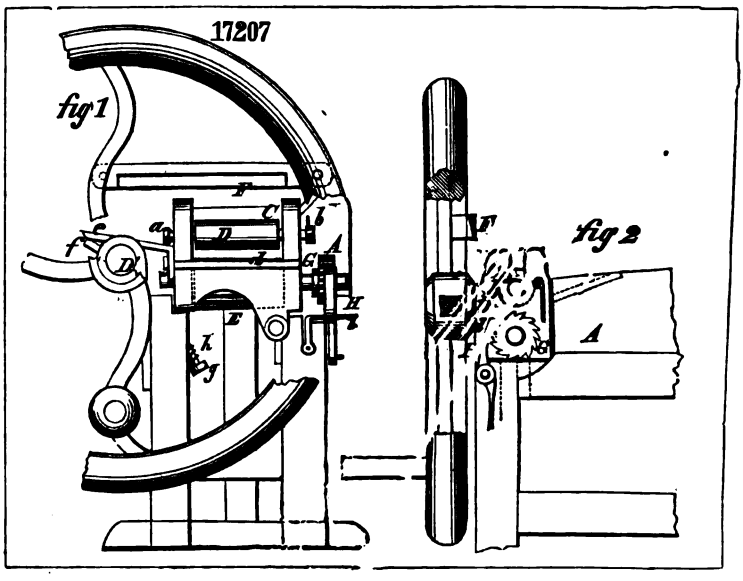
17207
fig 1
fig 2
A

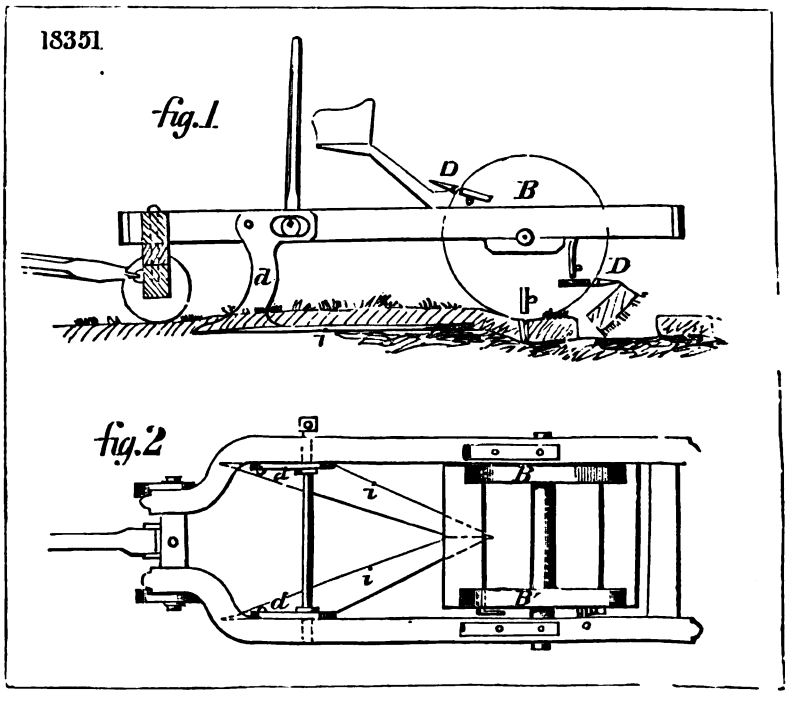
18351
fig. 1
D
B
D
a
fig. 2
B
B

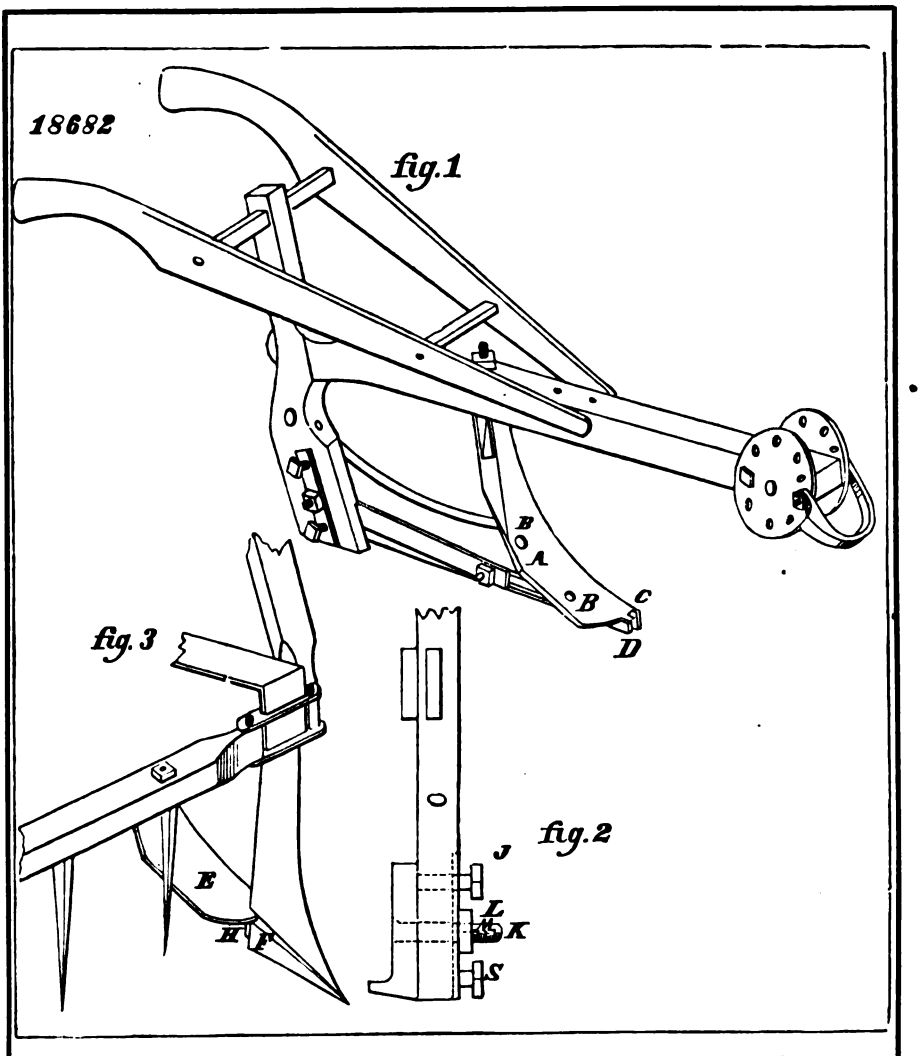
18682
fig.1
B
A
B
C
D
fig.3
E
H
F
fig.2
J
L
K
S

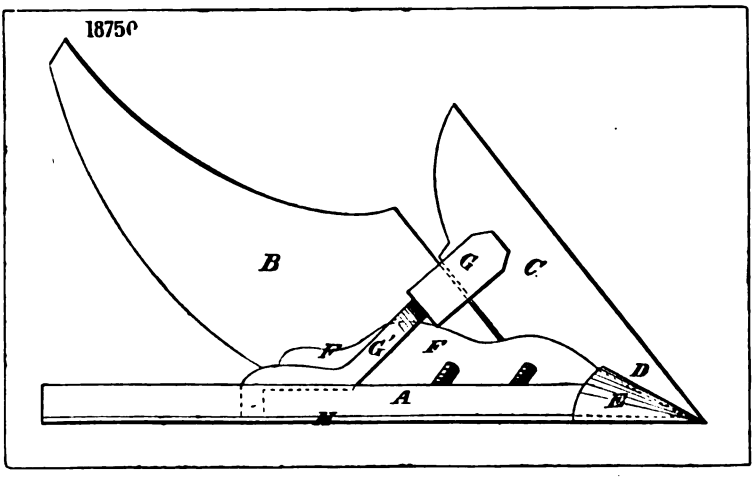
18750
B
G
C
F
G'
F
D
A
E
H

18335

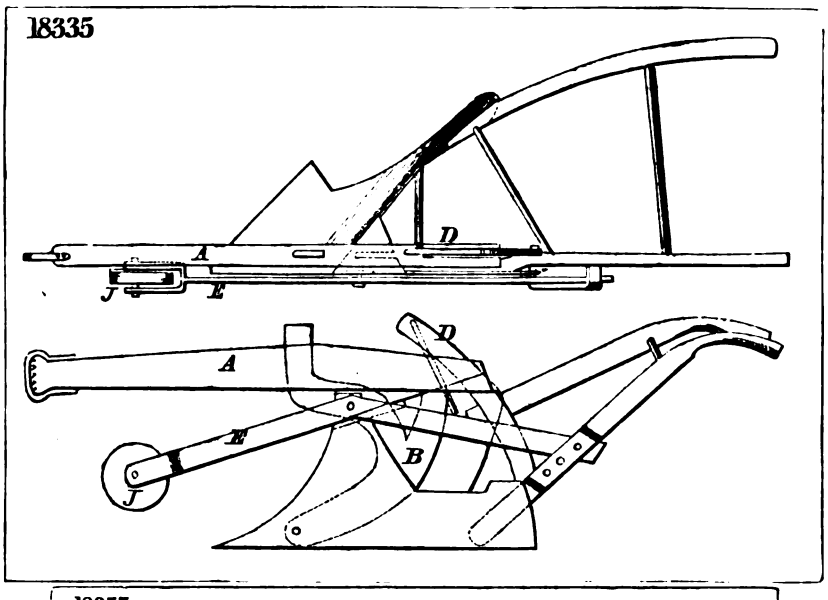

18355

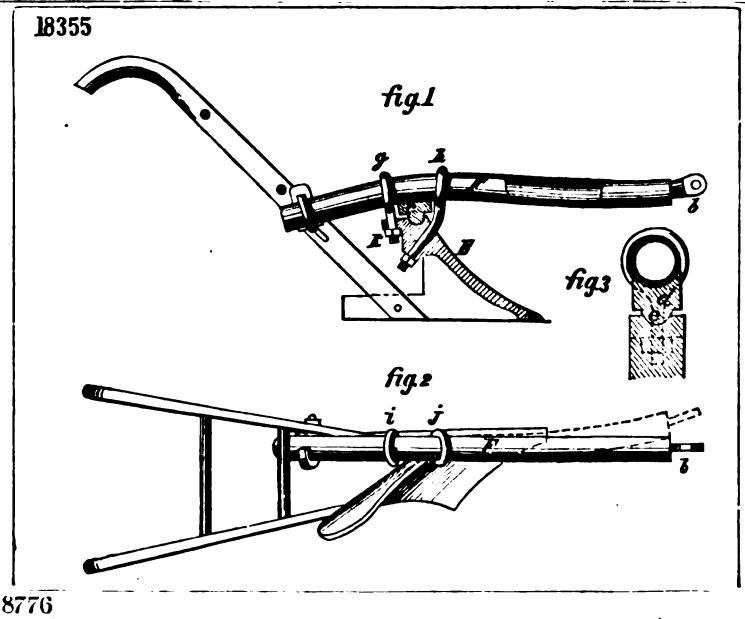

ad18776

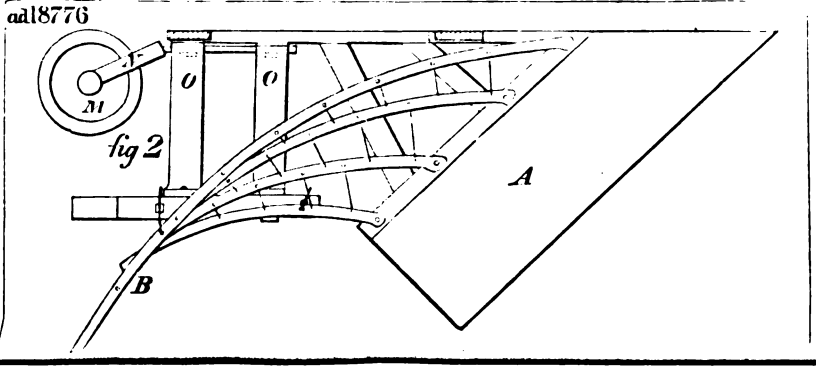

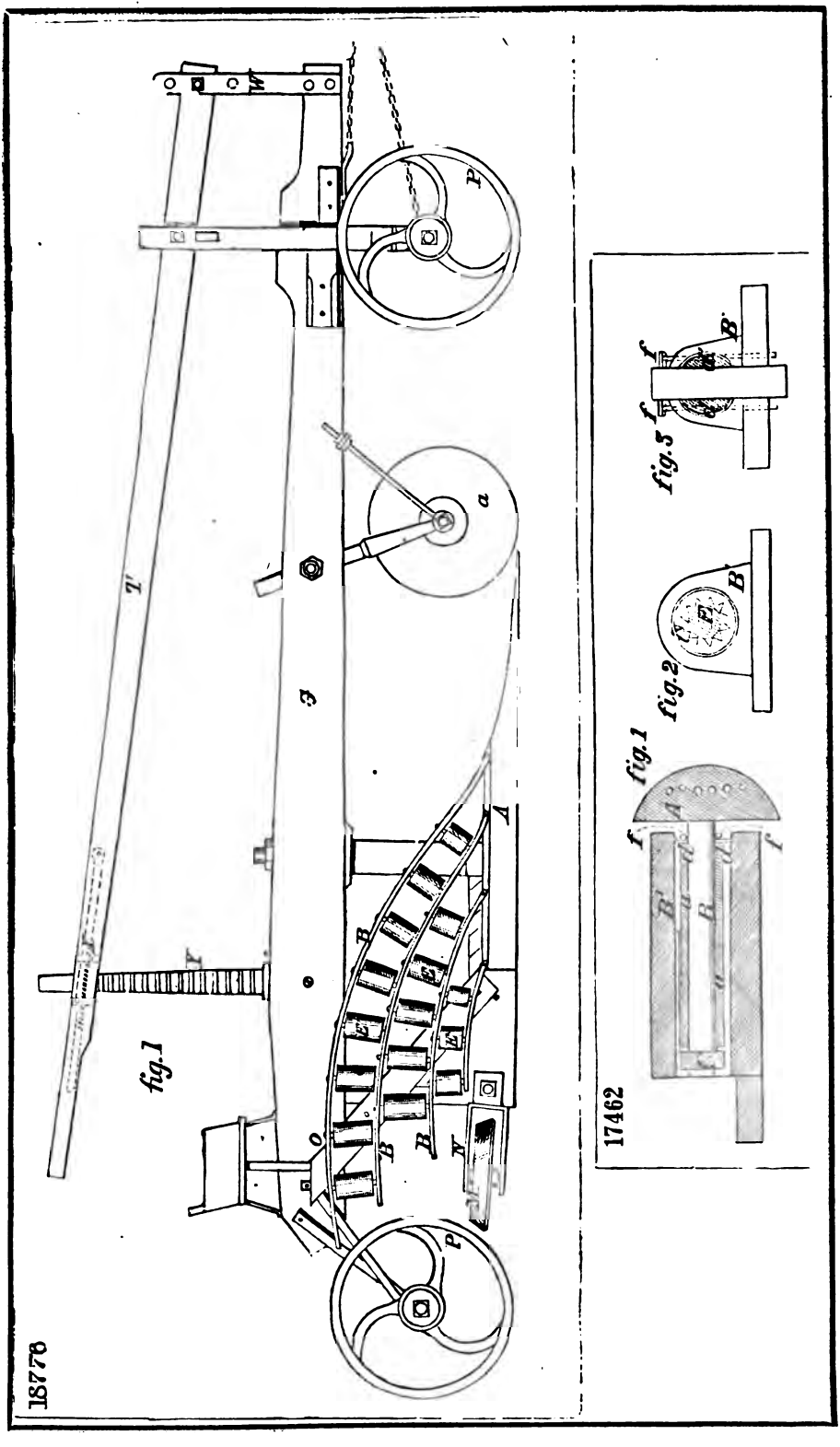
18778
fig.1
17462
fig.1
fig.2
fig.3

18867

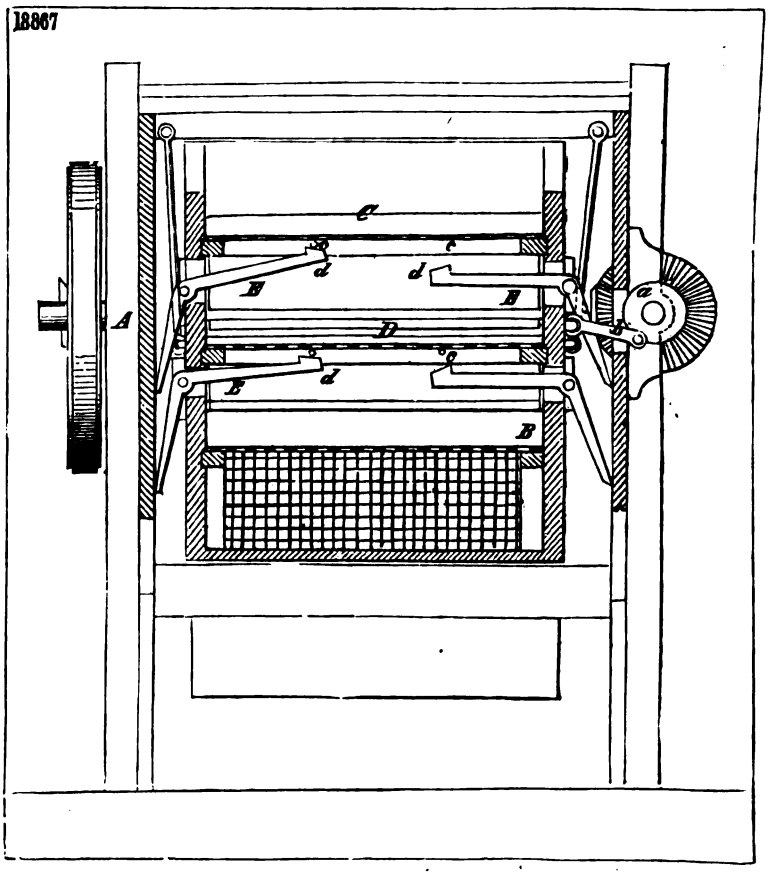

18146

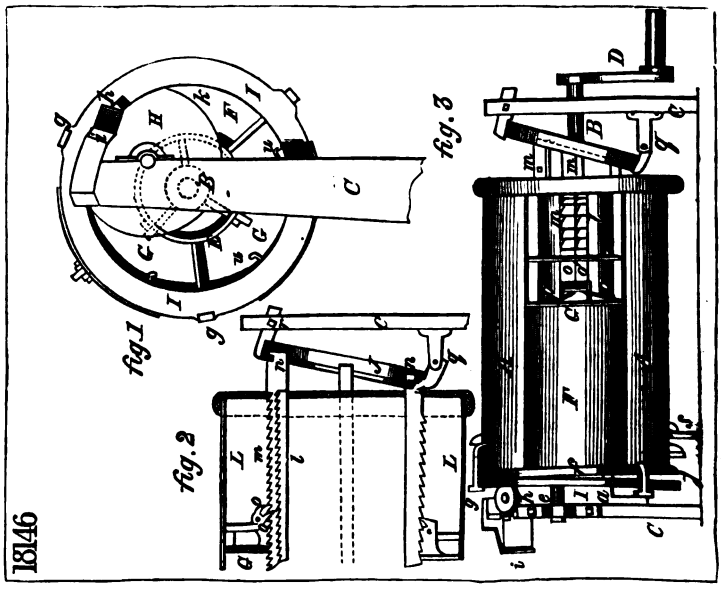

18783

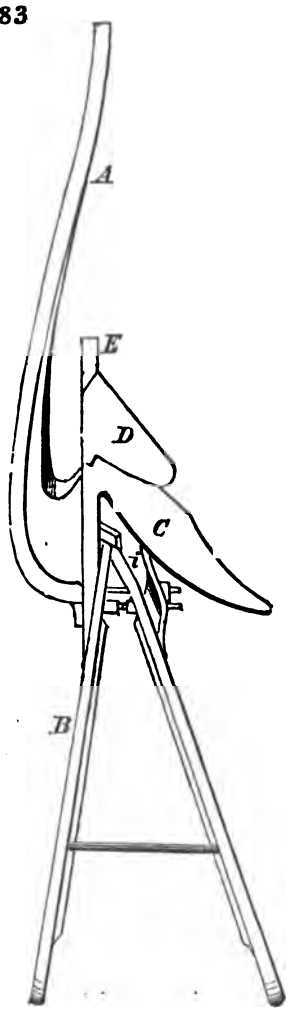

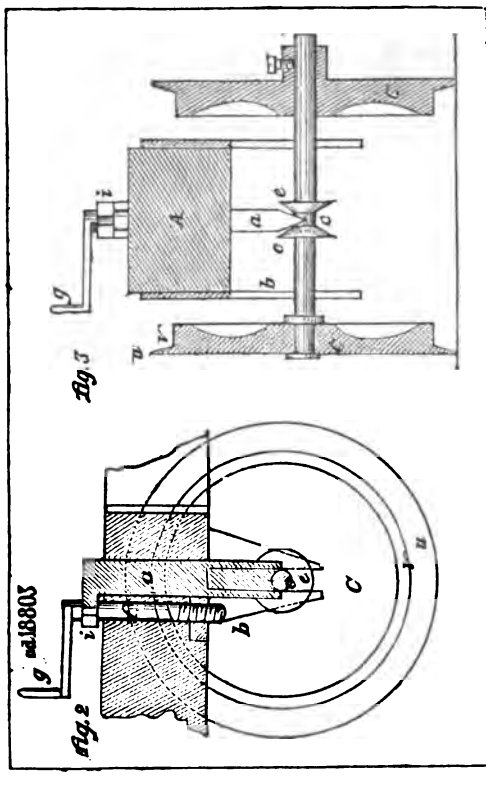

18726

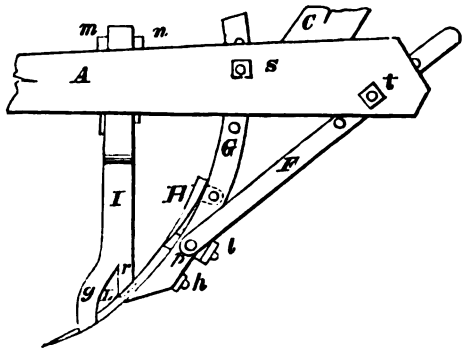

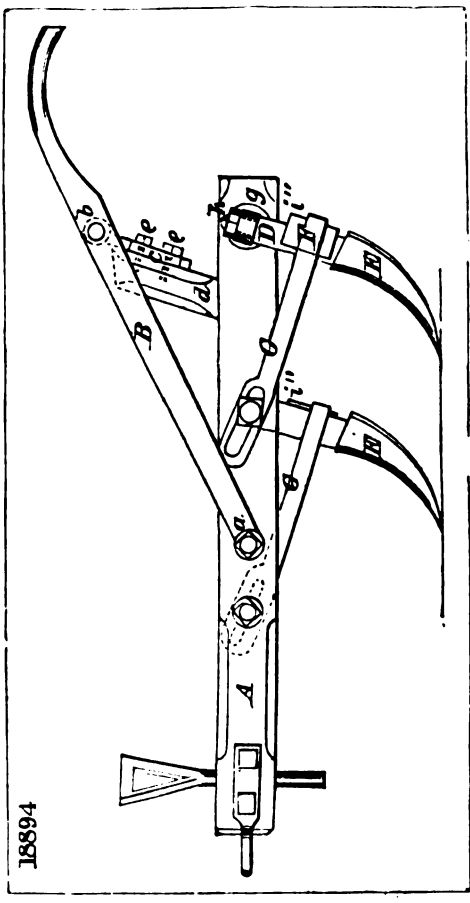
18894

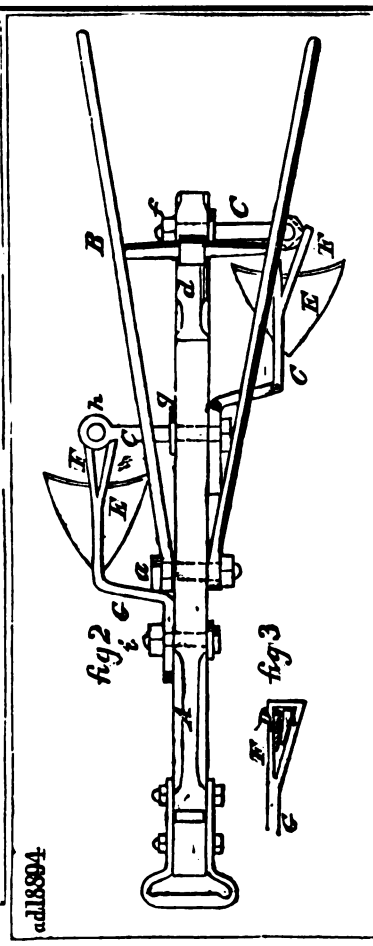
fig.2
fig.3
add 18894

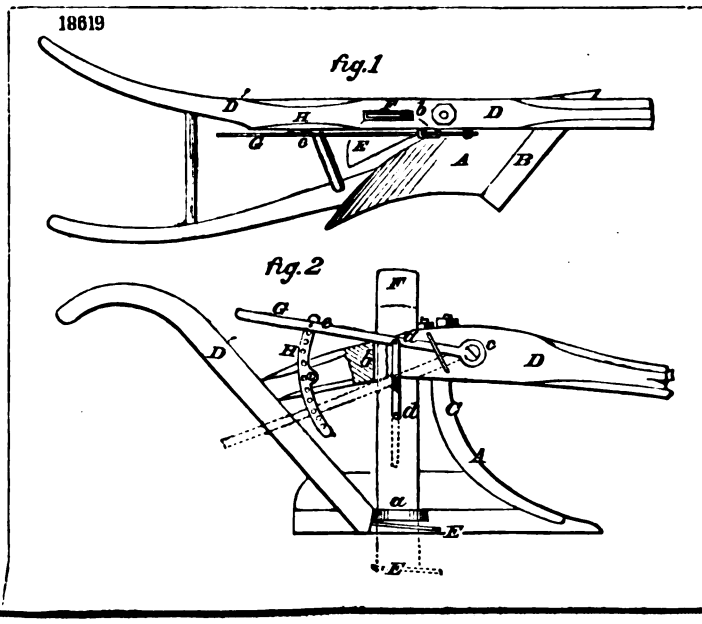
18619
fig.1
fig.2

18468

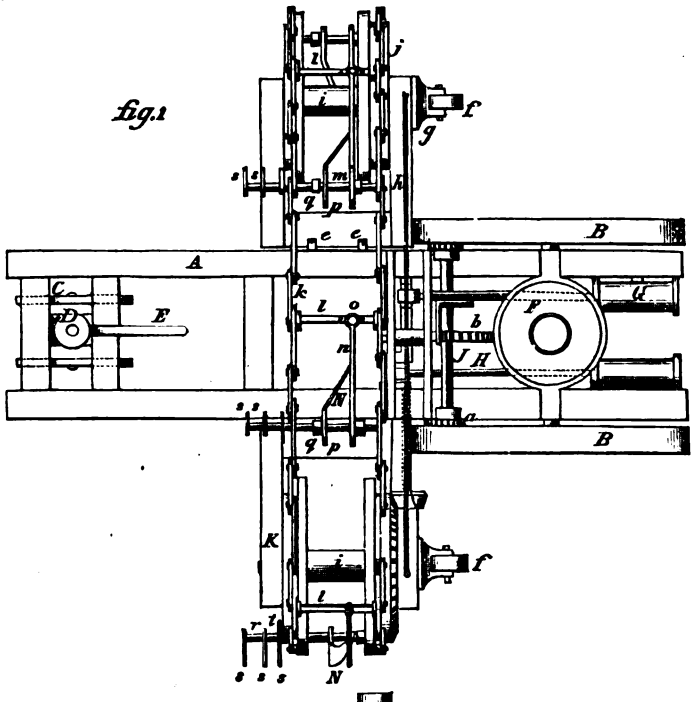

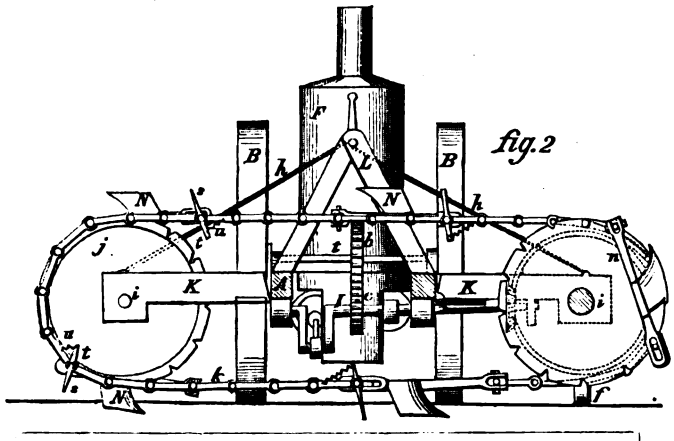

17577

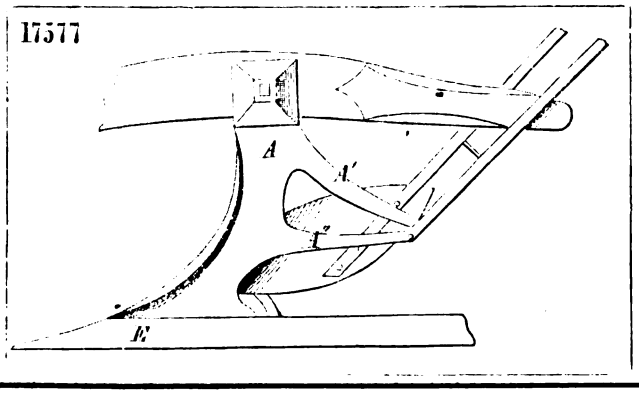

18609

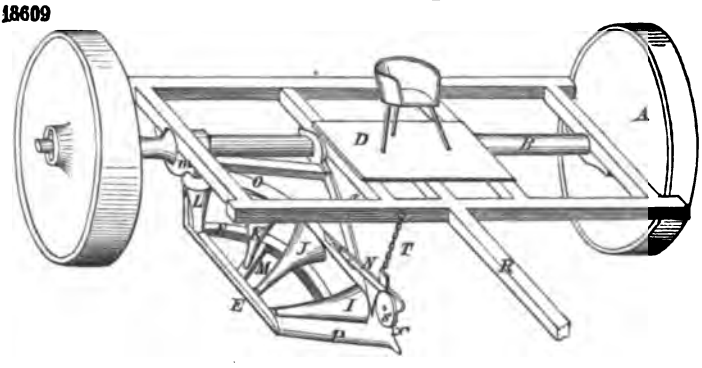

18803

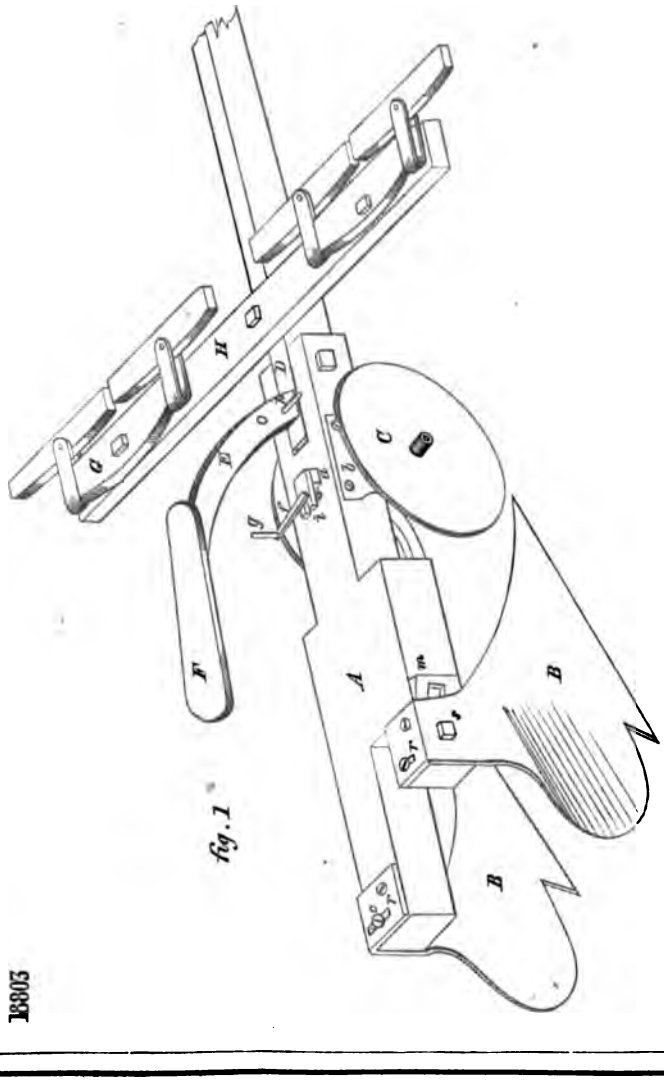

fig. 1

17591

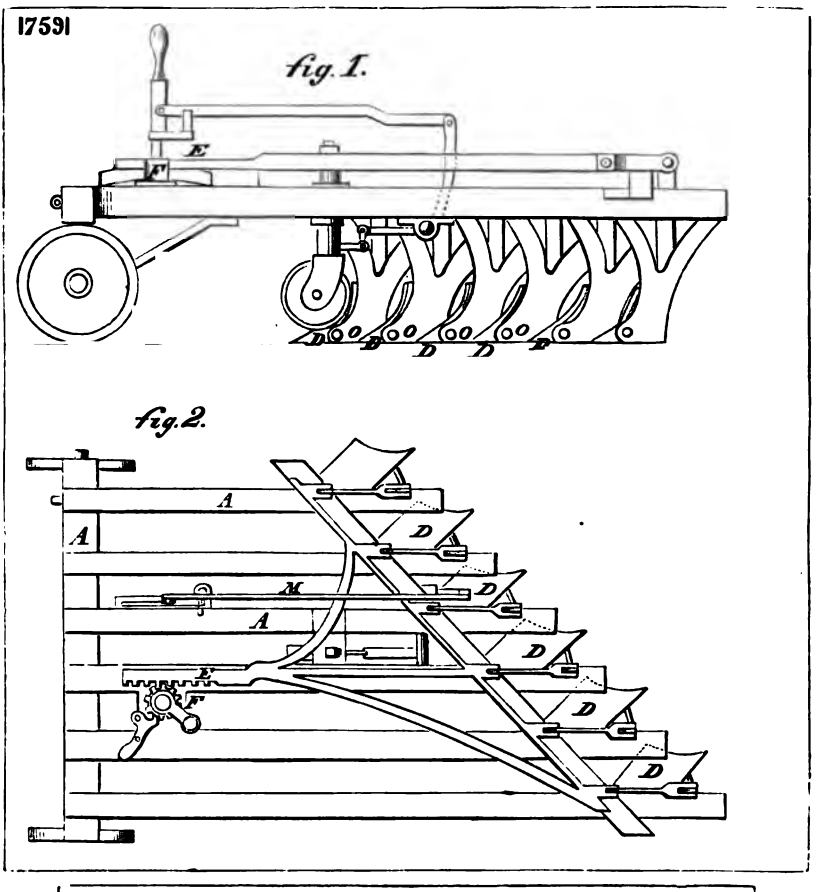

17777.

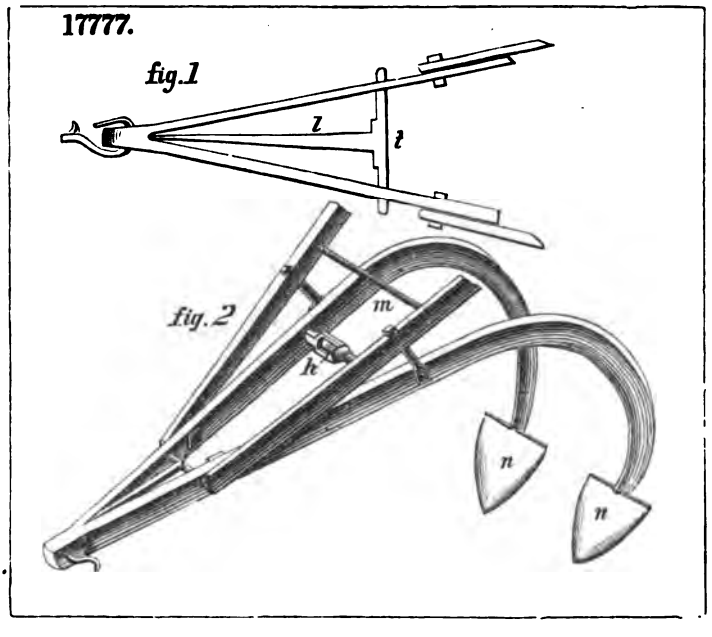

17212

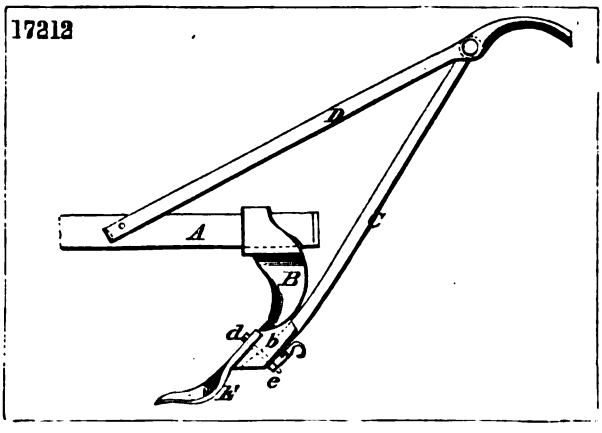

18600

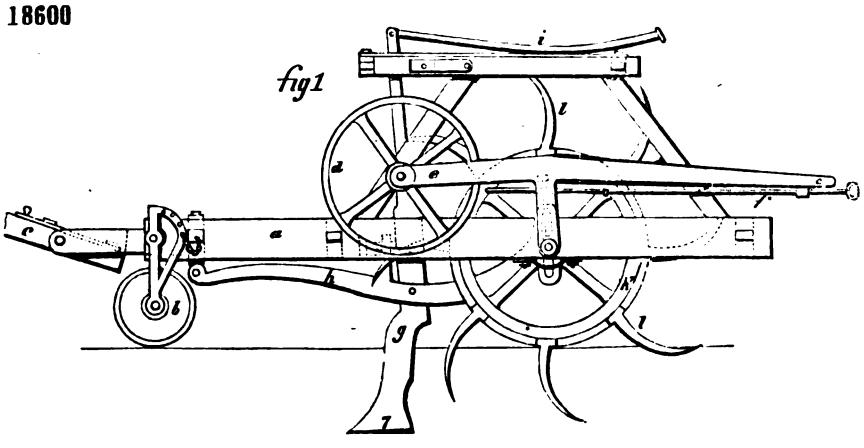

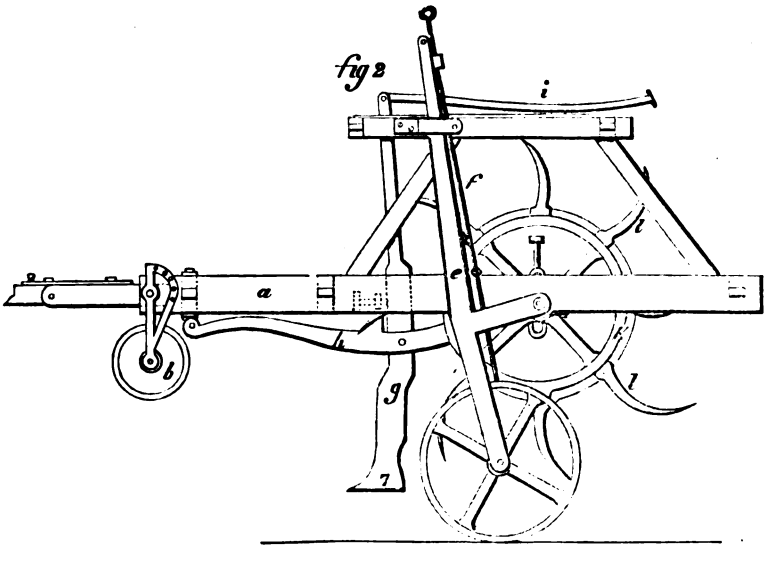

18446

fig. 1

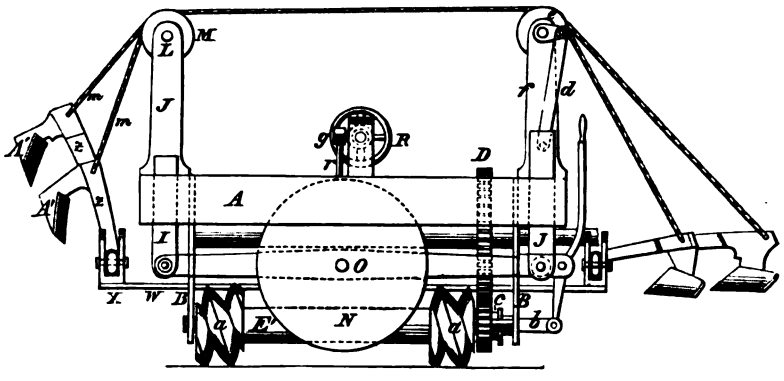

fig. 2

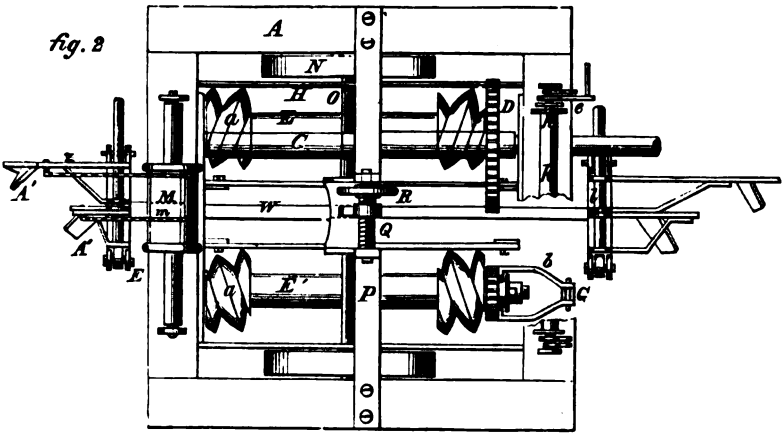

17594

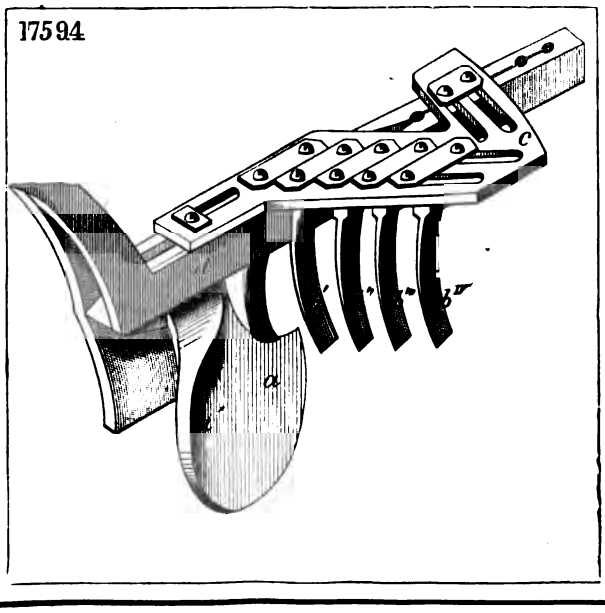

18343

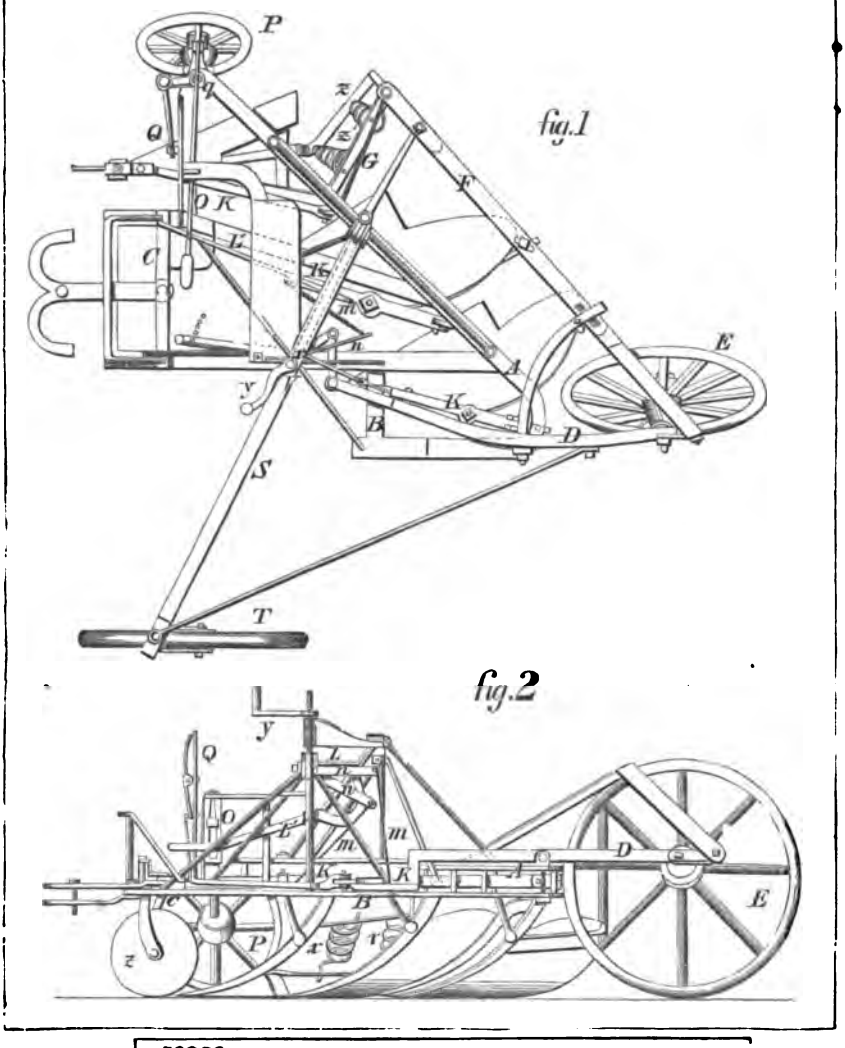

18336

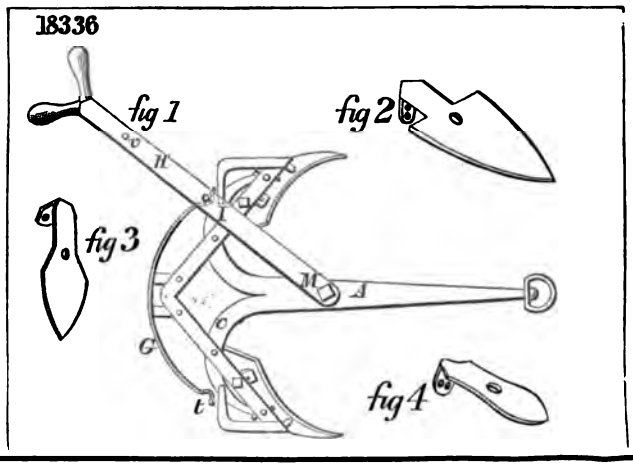

16918

fig.1

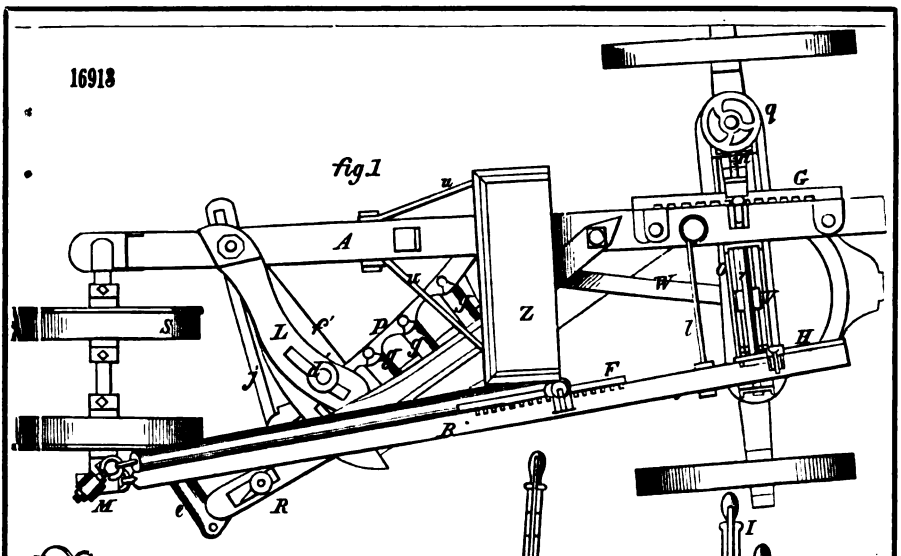

fig.2

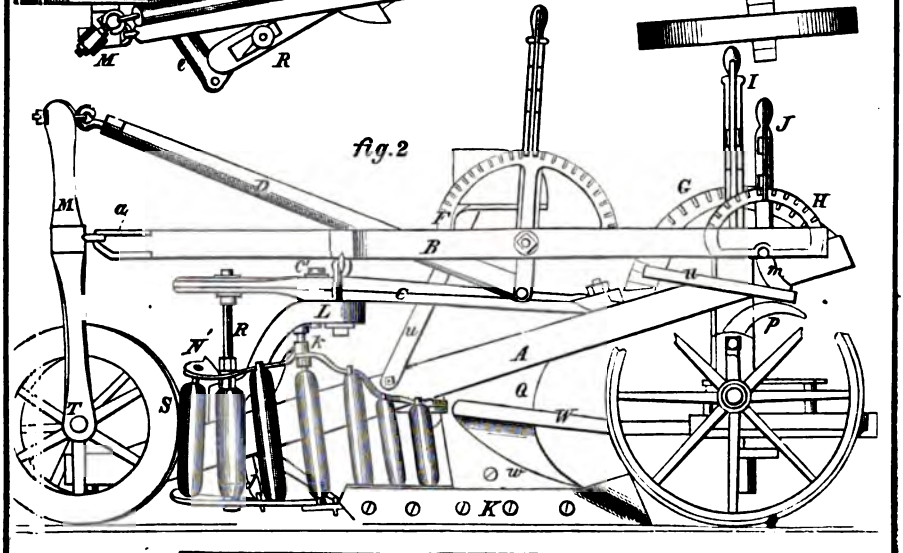

18825

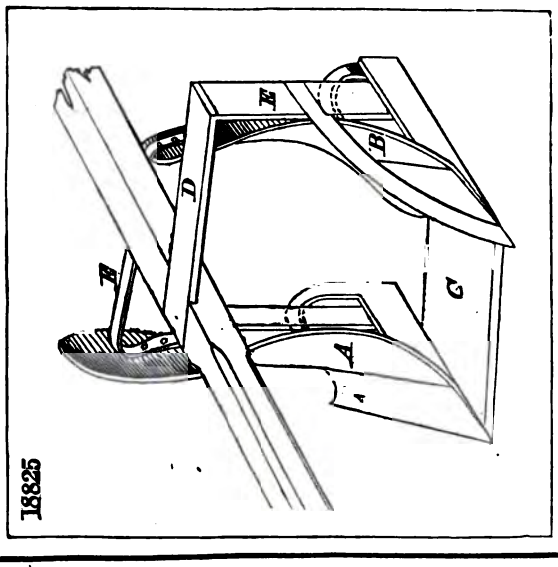

16937

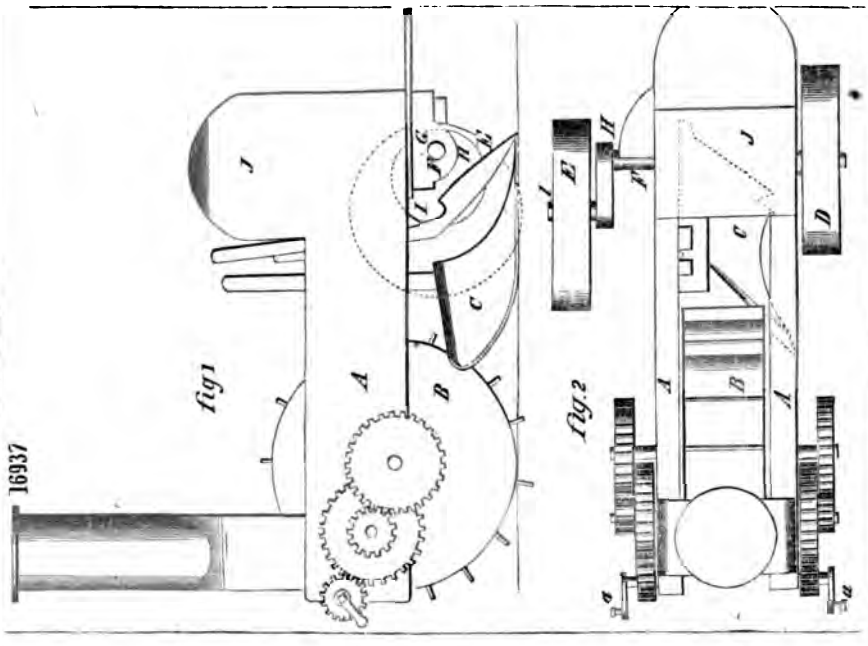

18397

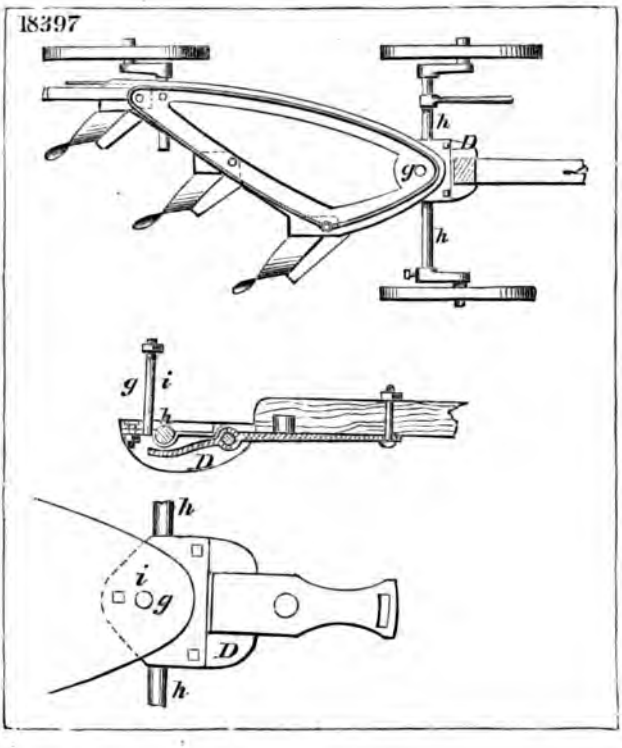

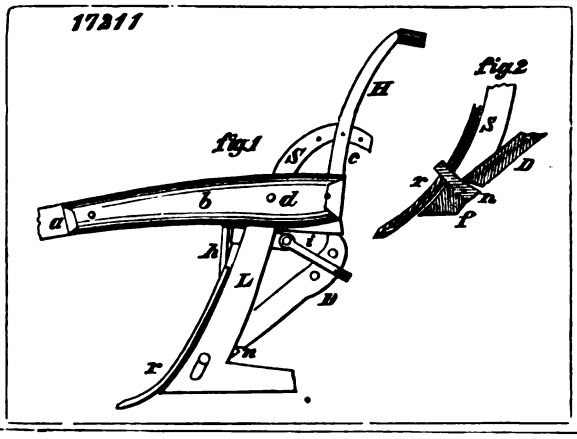
17211
fig1
fig2
H
S
c
a
b
d
h
i
L
E
x
n
s
D
r
f

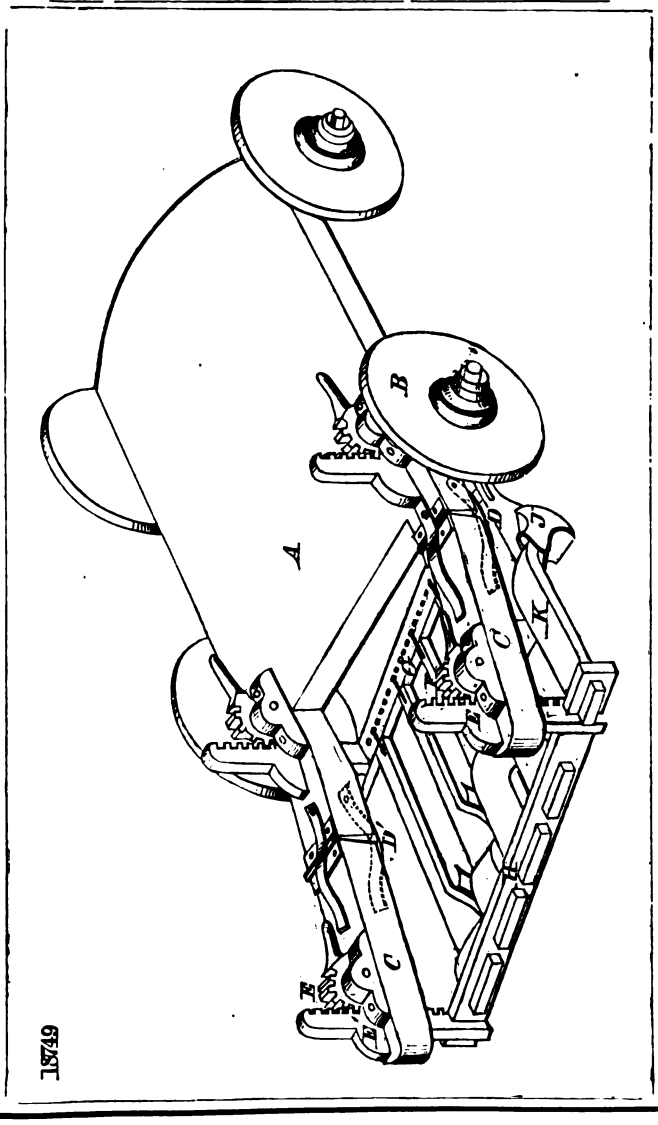
18749
A
B
C
D
E
K

17430

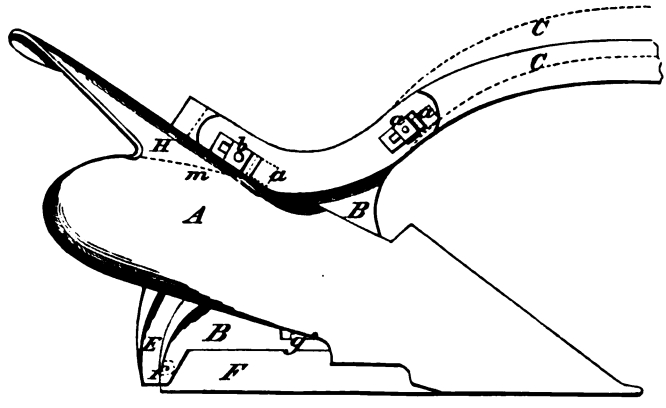

17428

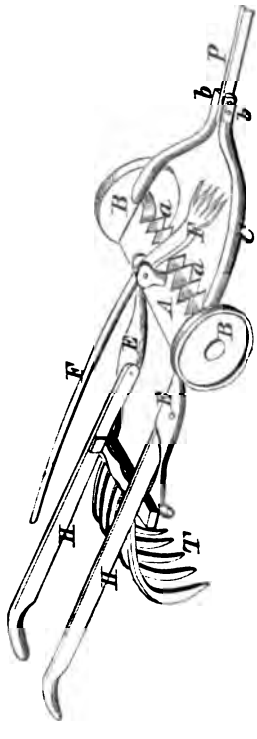

18480

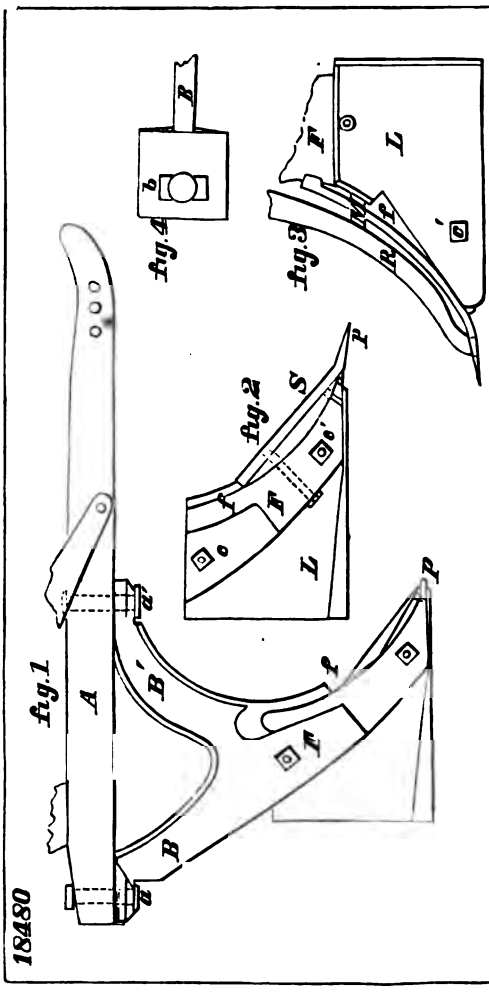

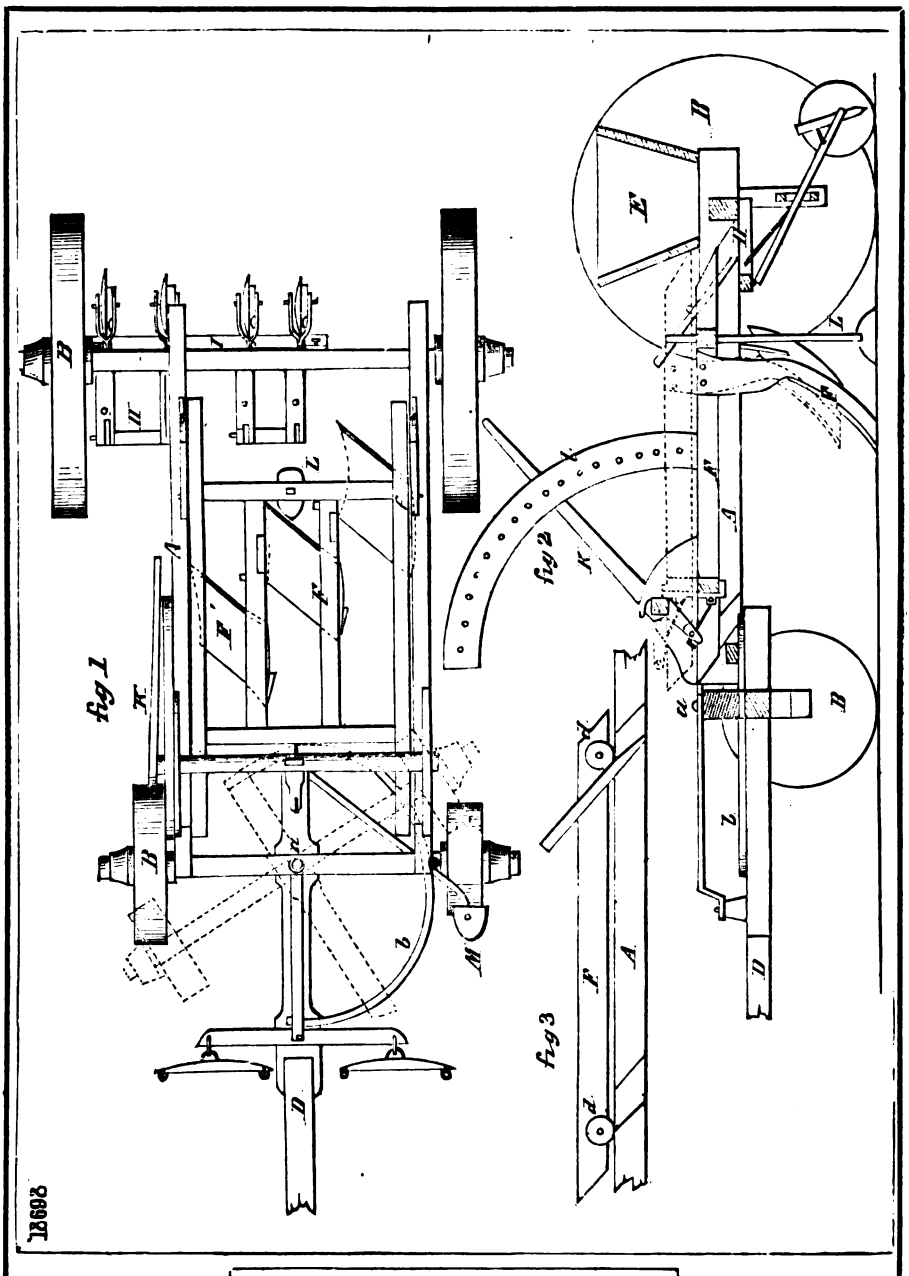
fig 1
fig 2
fig 3
12693

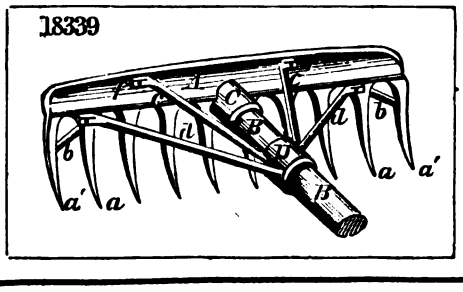
18339

18954

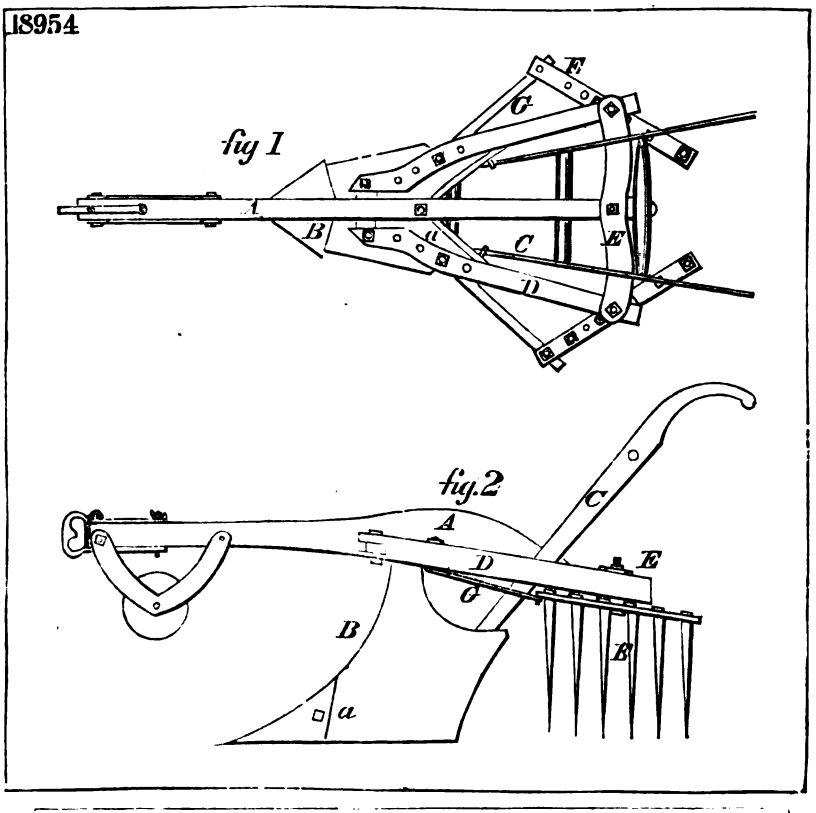

17129

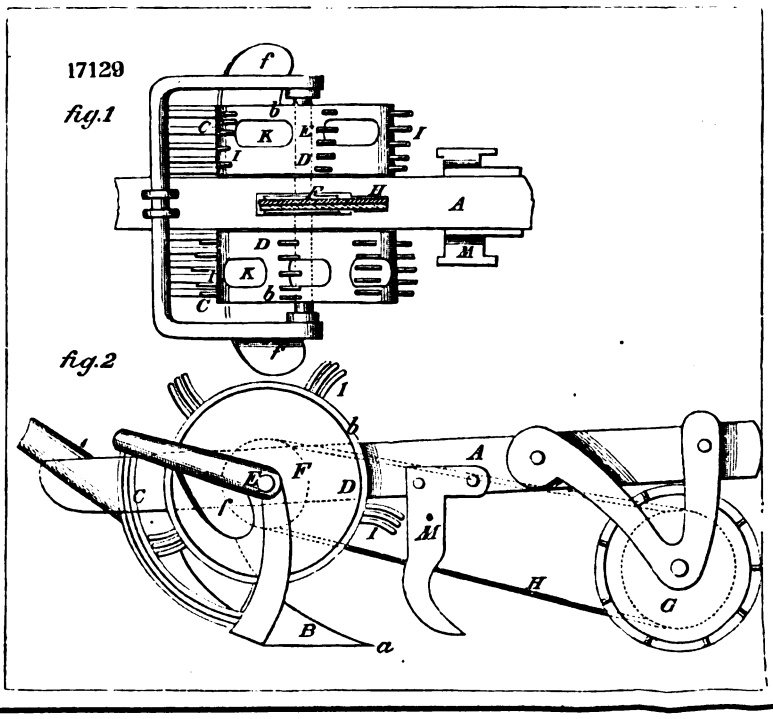

18009

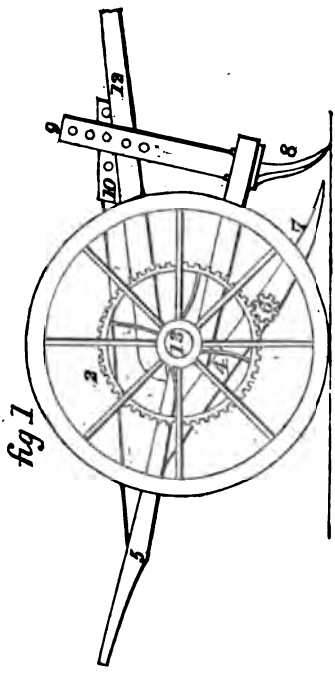
fig 1
3
5
7
8
9
10
12
13

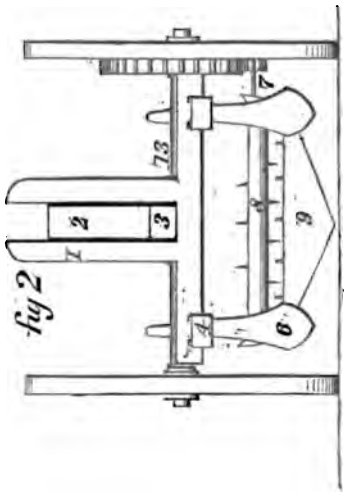
fig 2
1
2
3
4
6
7
9
13

17827

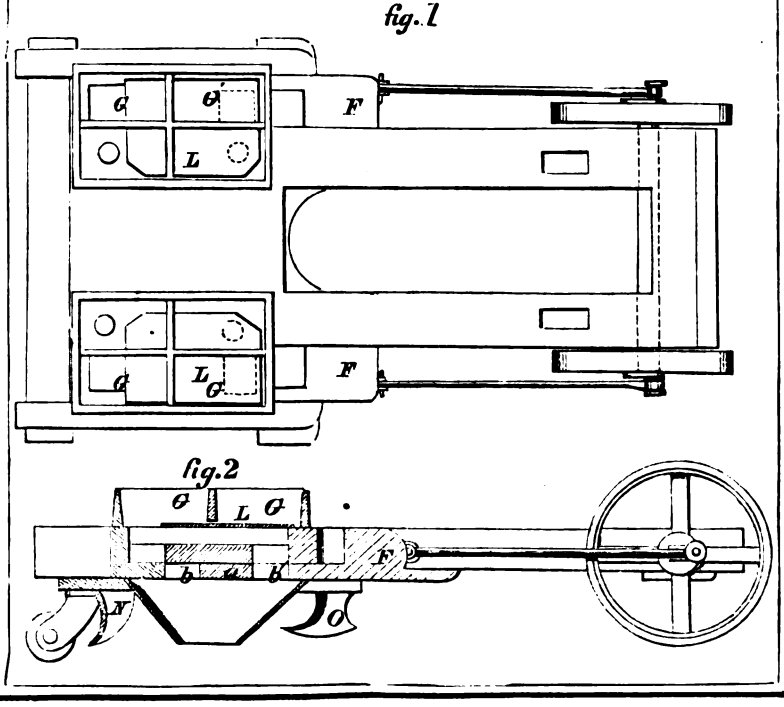
fig. 1
G
G
L
F
G
L
G
F
fig. 2
G
L
G
b
a
b
F
N
O

16582

fig. 1

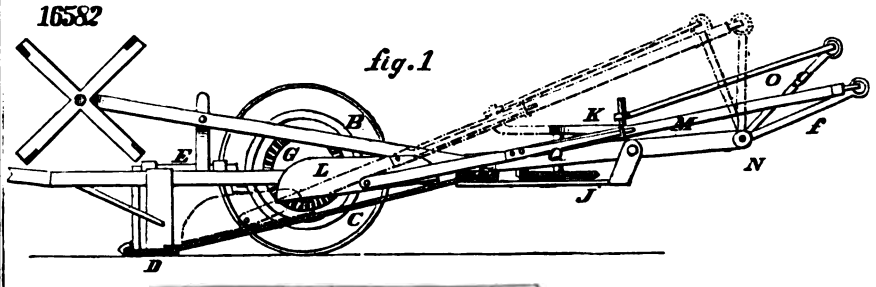

fig. 2

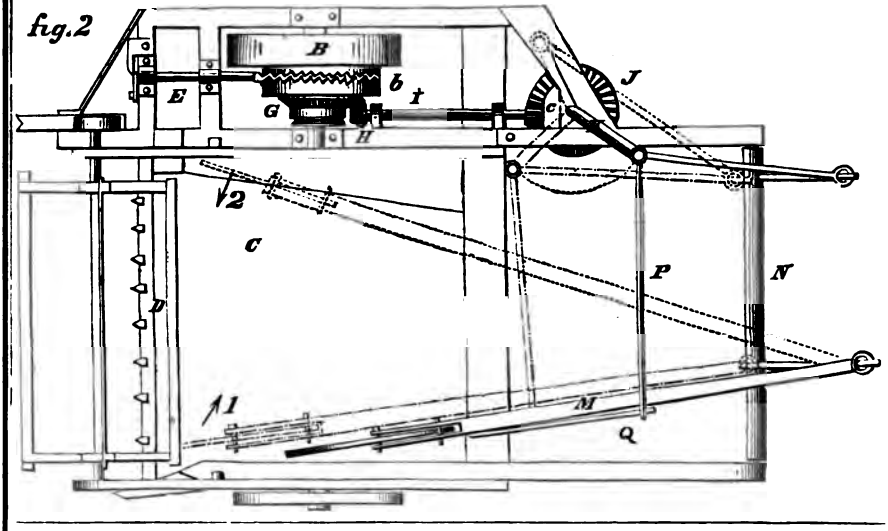

16722

fig. 1

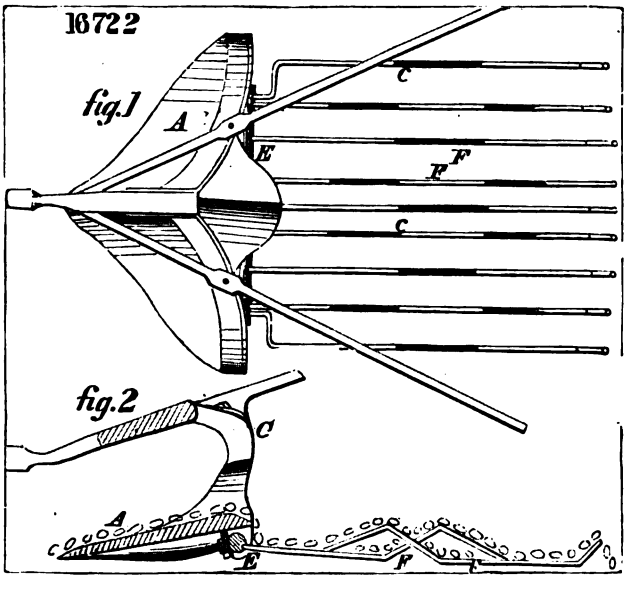

fig. 2

16599

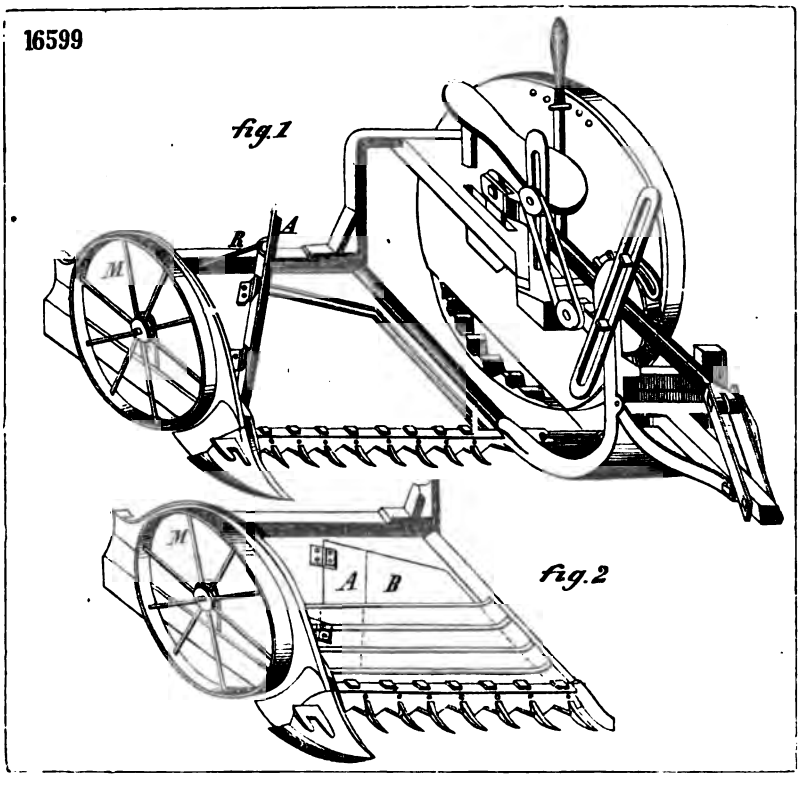

18221

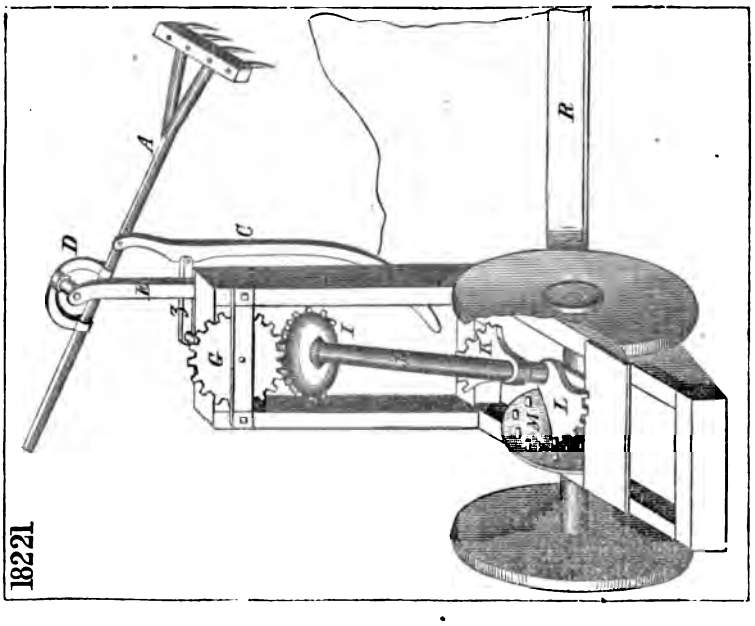

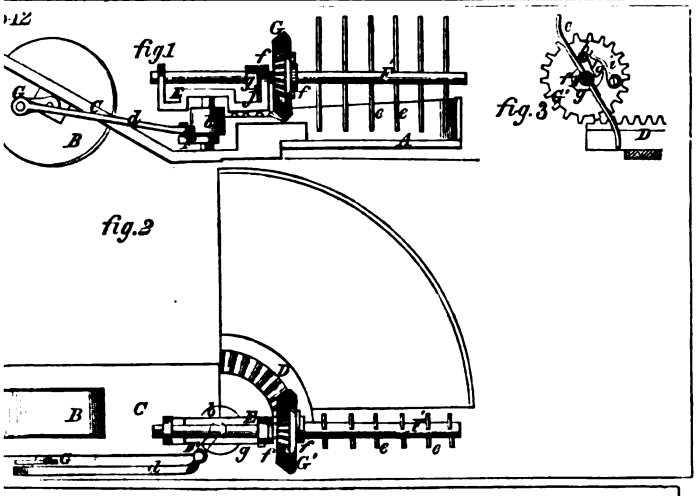

8329

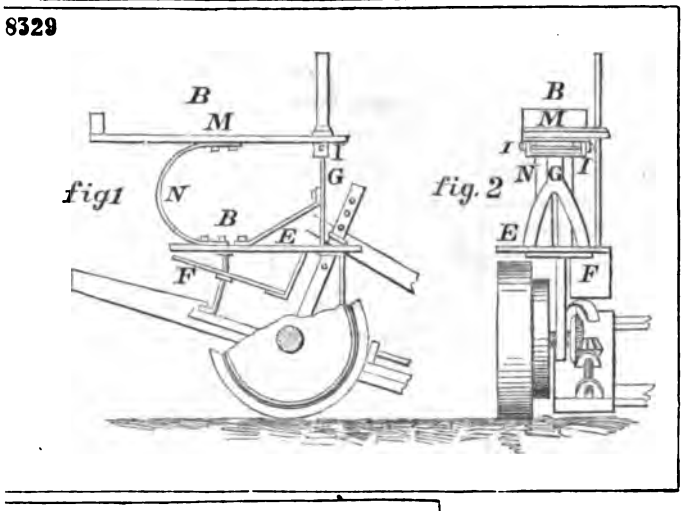

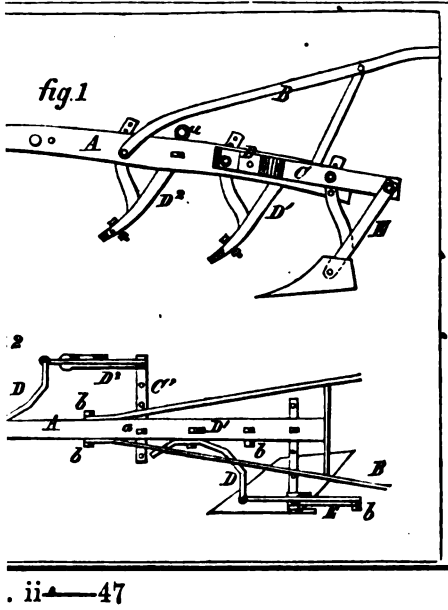

17990

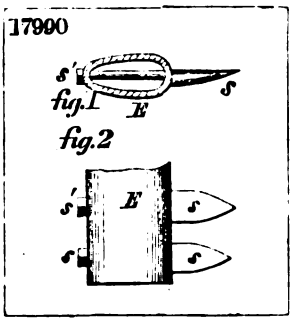

18850

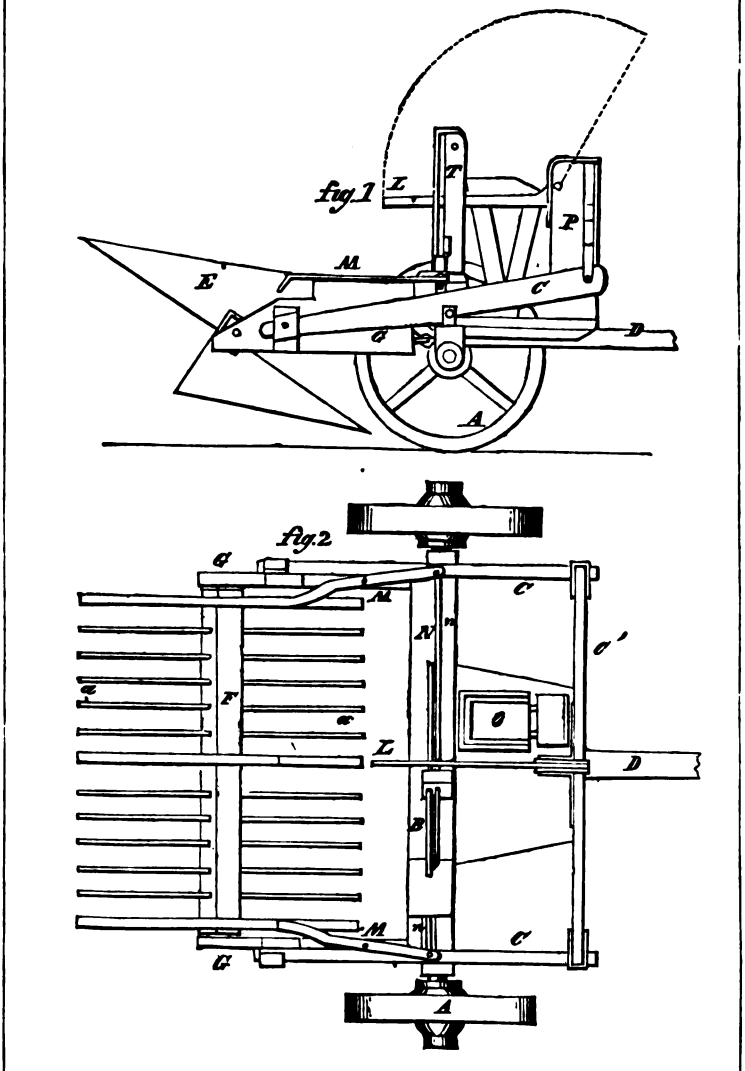

18340

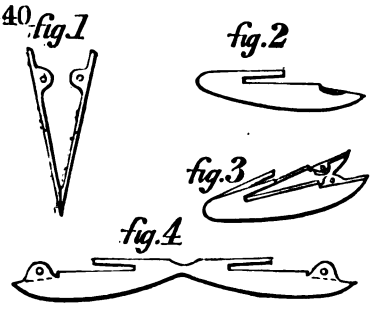

18983

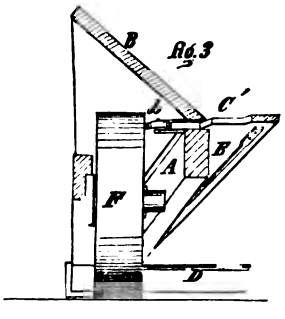

18731

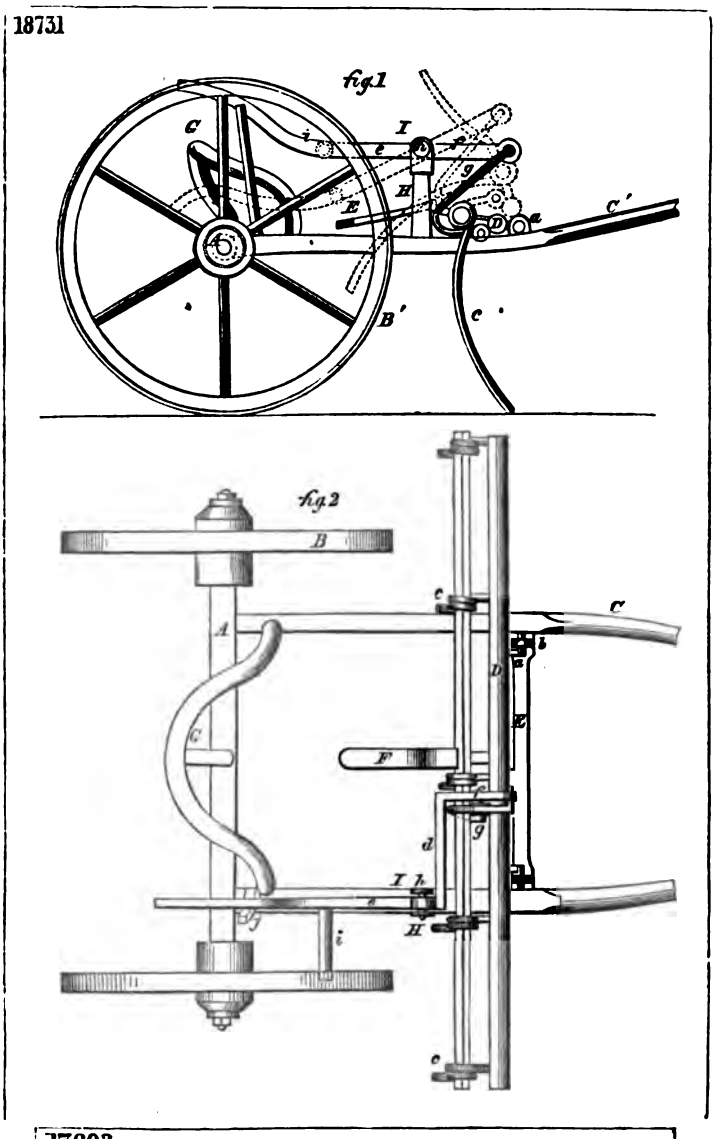

17693

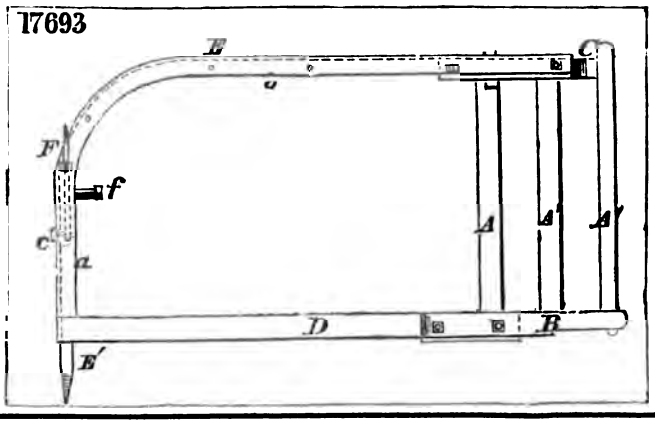

18869

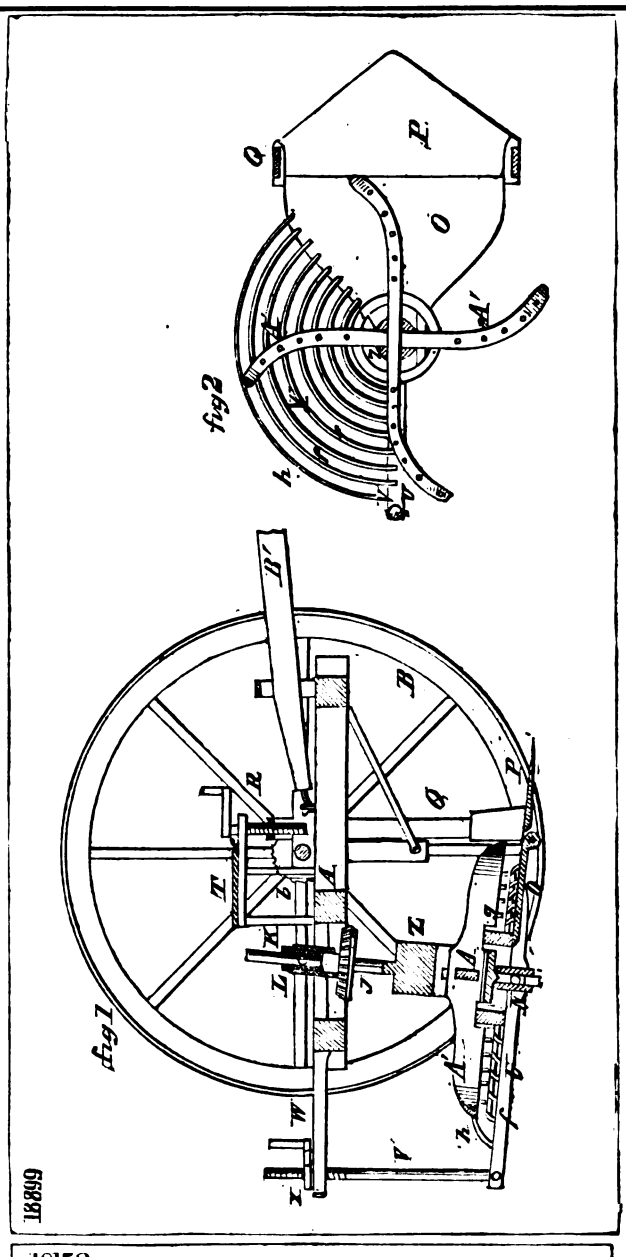

18158

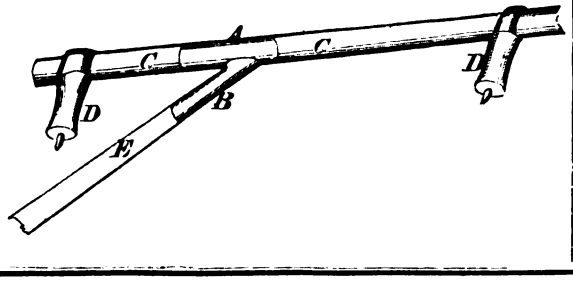

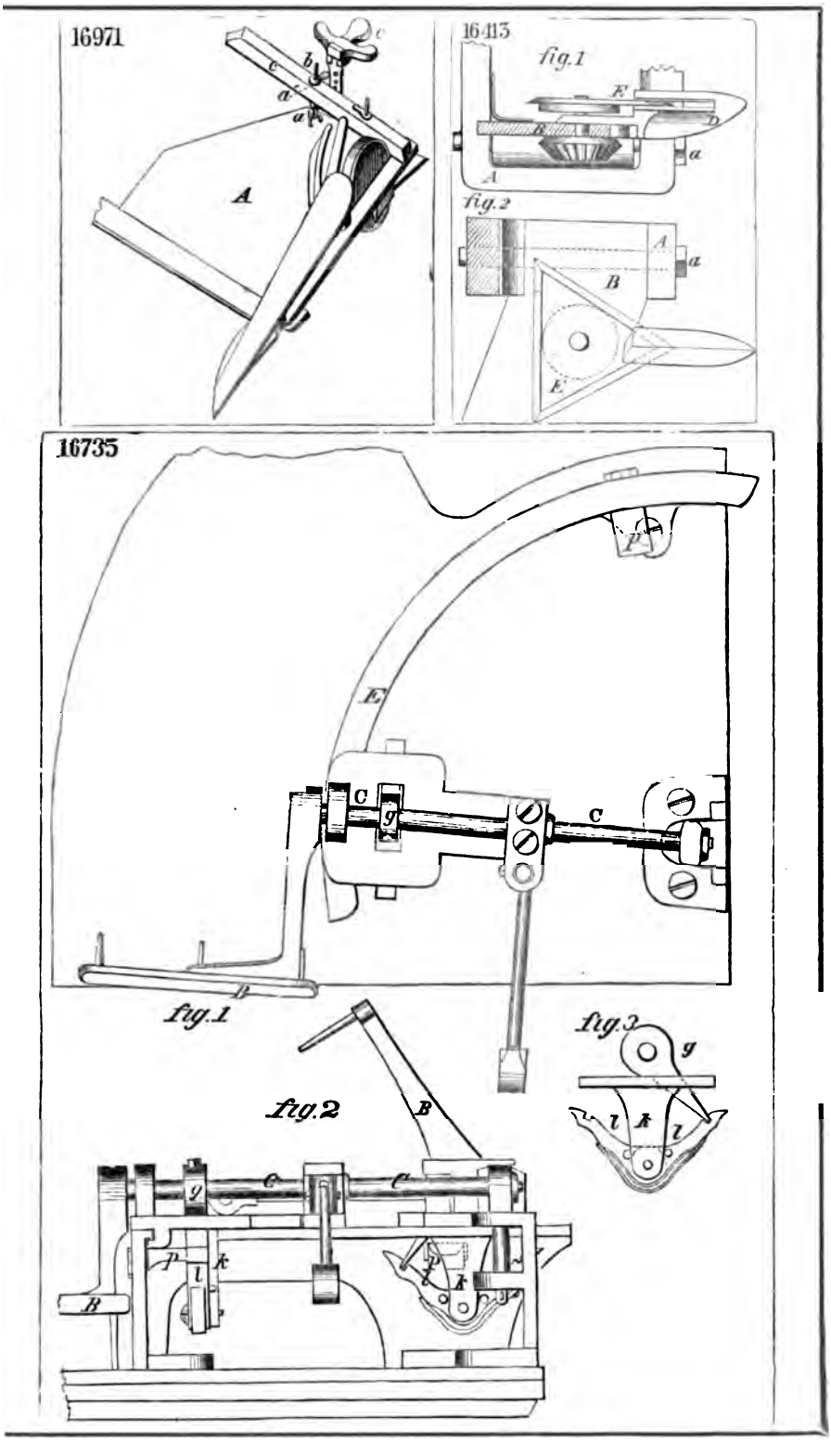
16971
A
16413
fig.1
fig.2
16735
fig.1
fig.2
fig.3

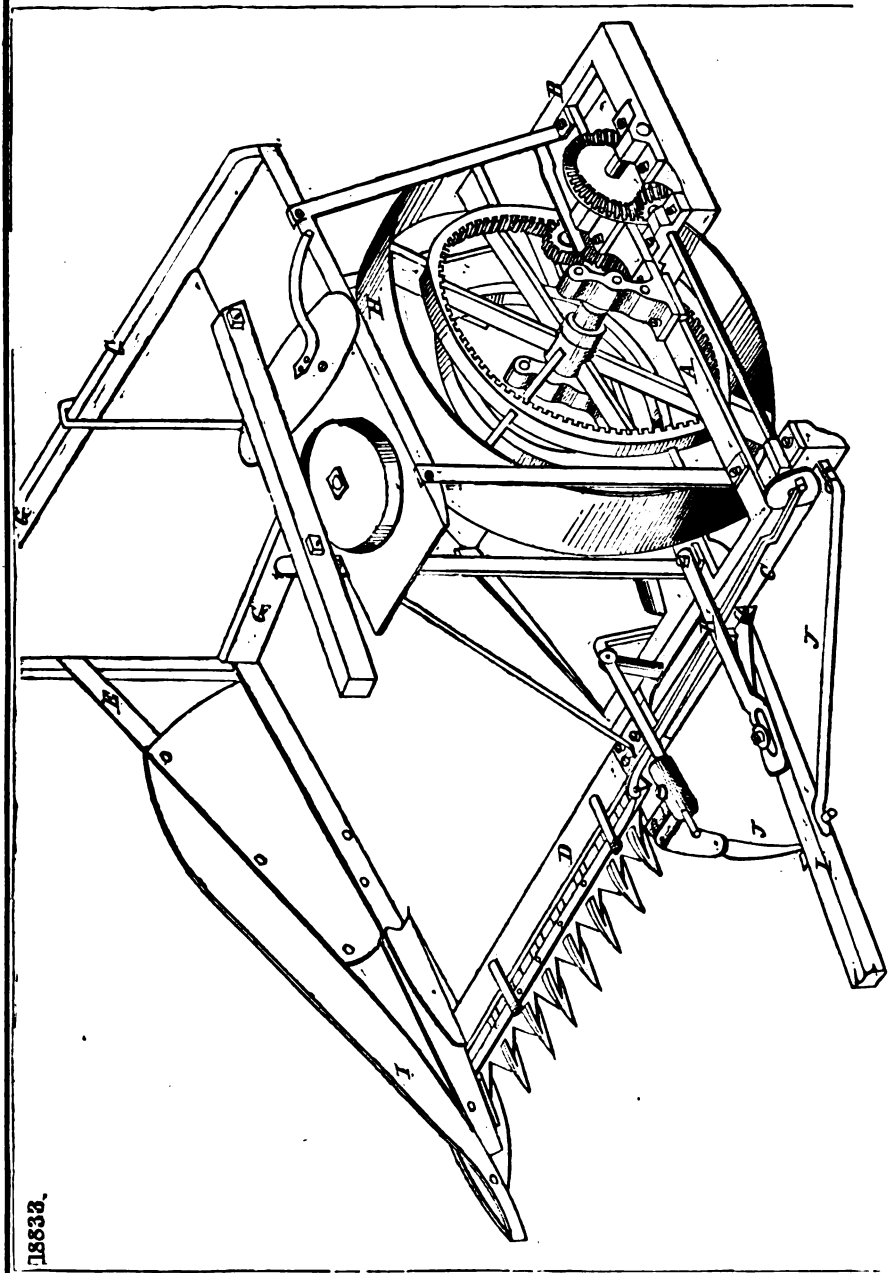

18533.

18188

fig1

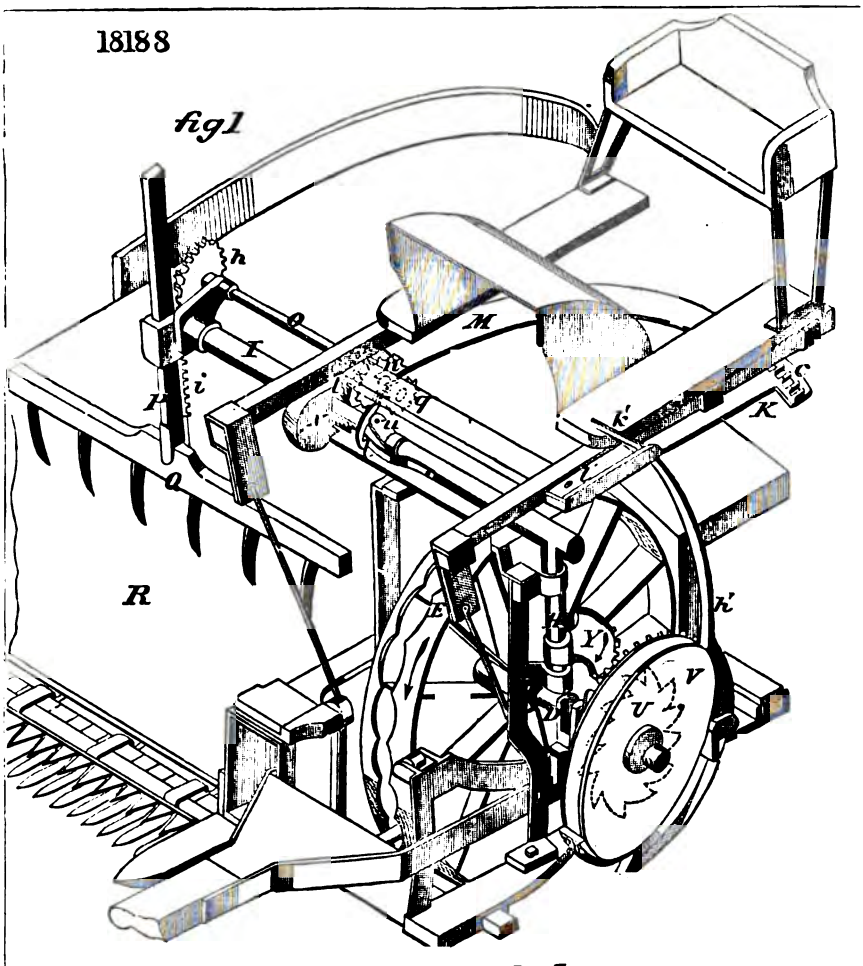

fig2

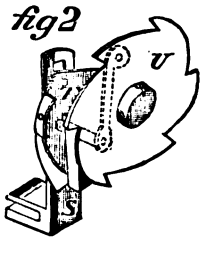

fig3

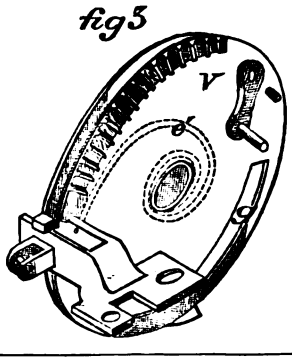

17772

fig.1

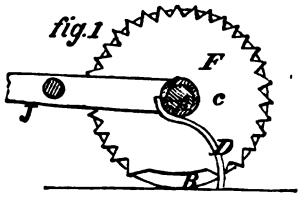

fig.2

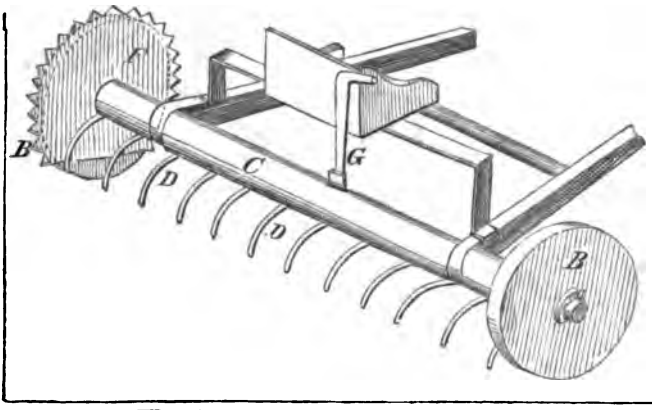

18329

fig.1

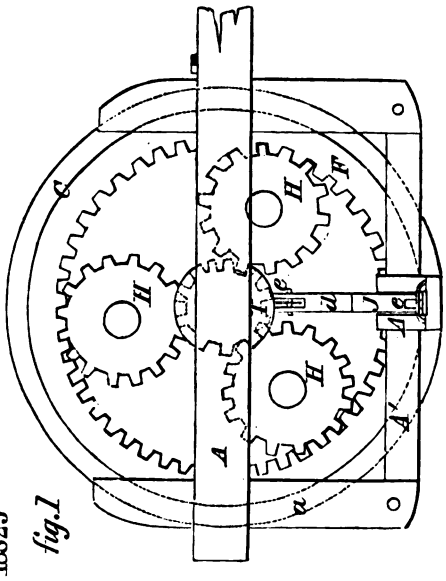

fig.2

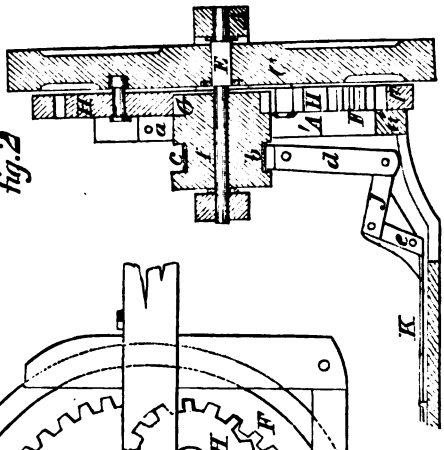

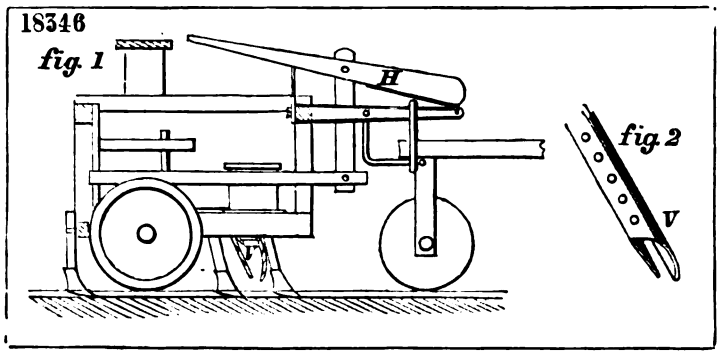
18346
fig. 1
H
fig. 2
V

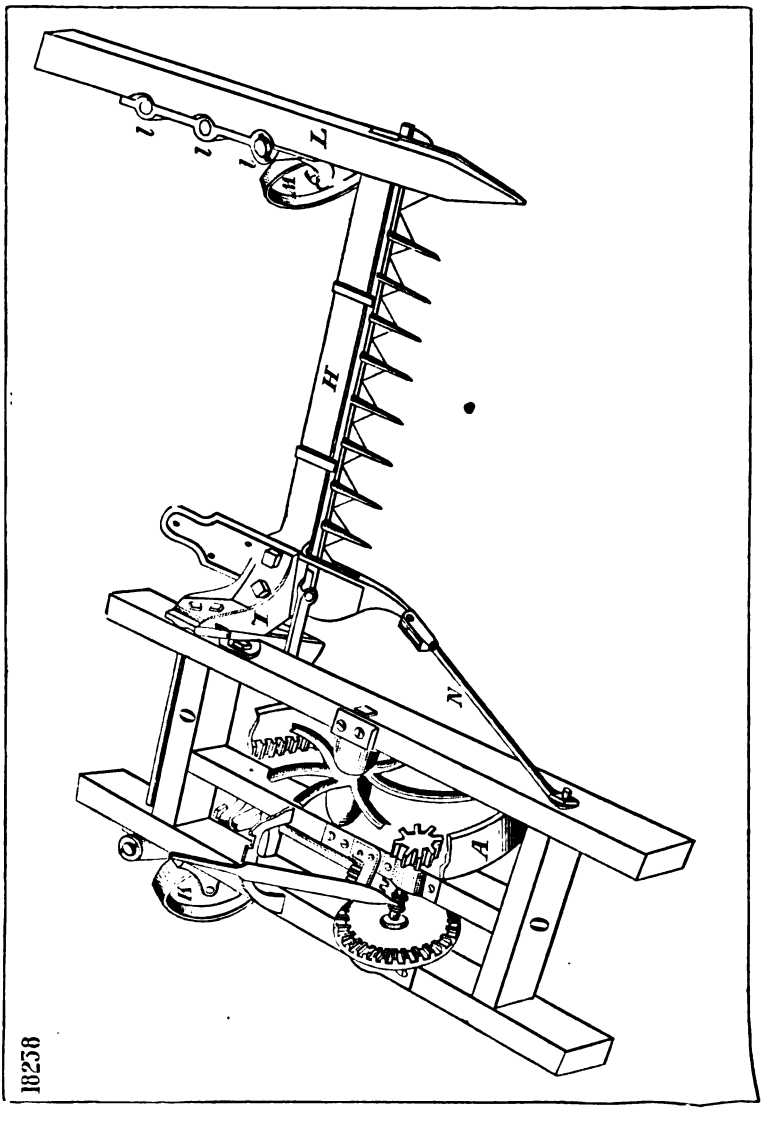
18256
T
H
L
N
O
O

17350

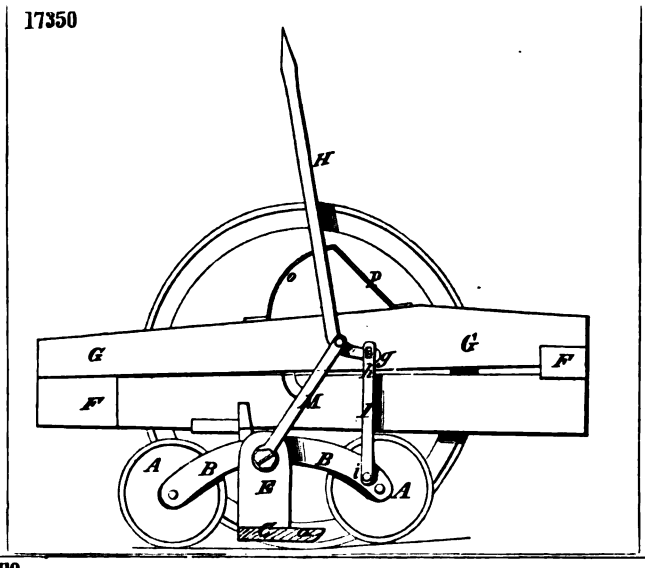

18119

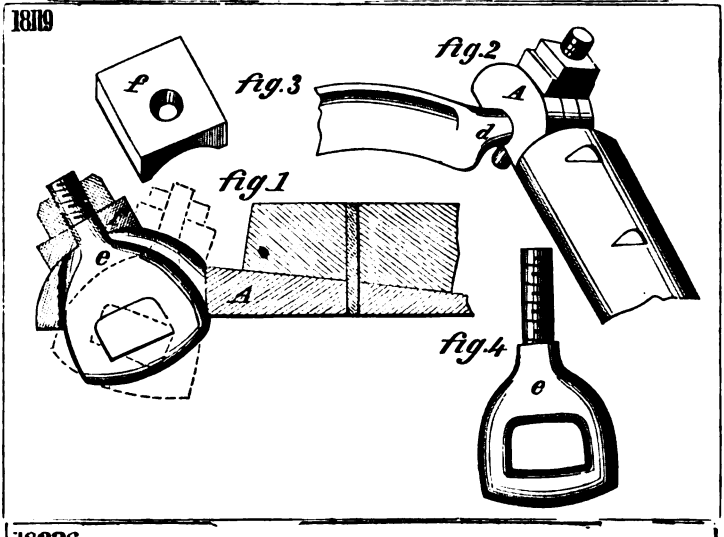

18326

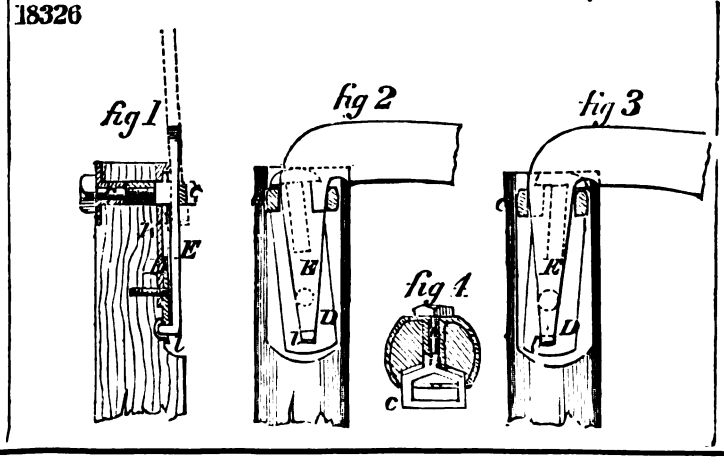

18492

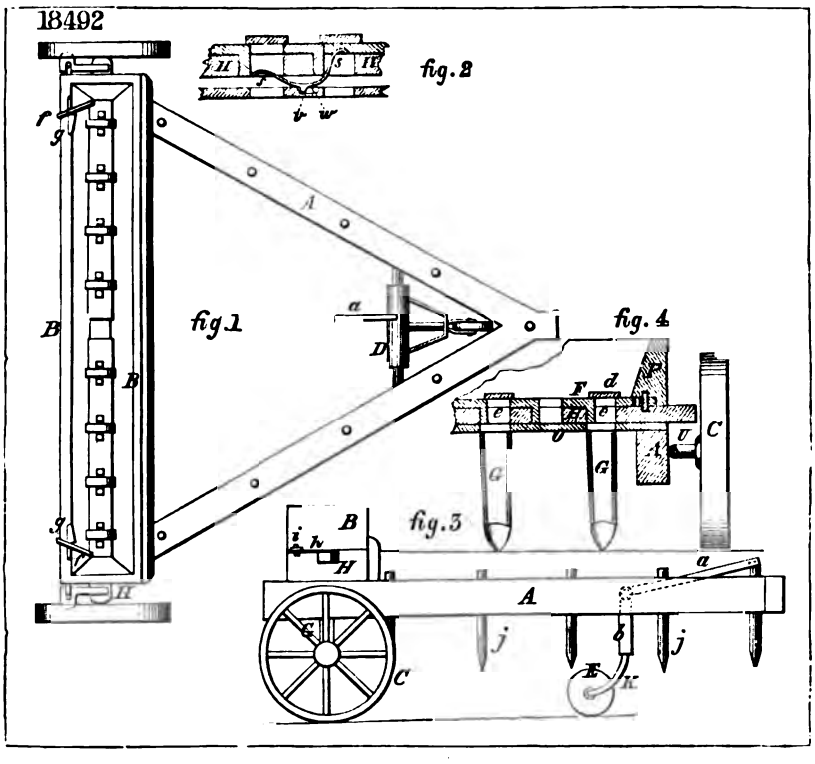

18735

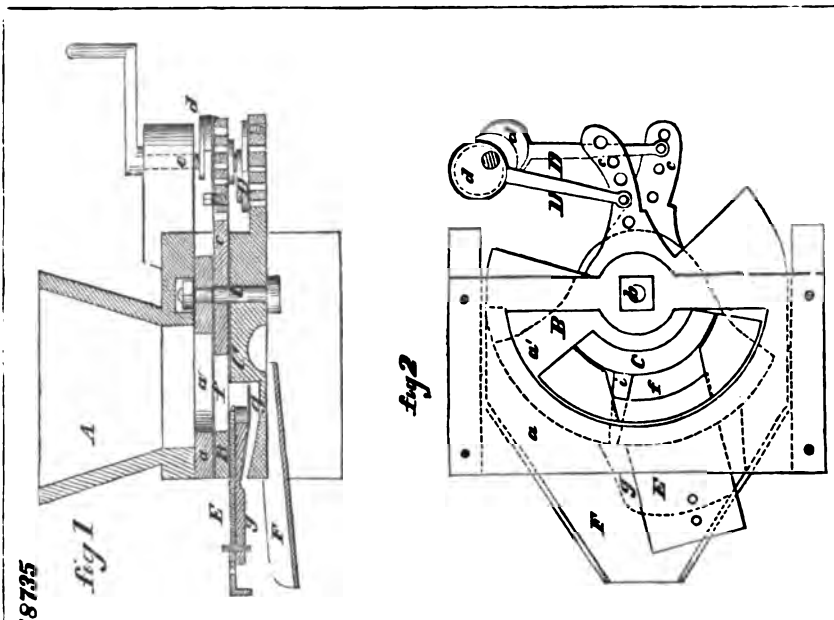

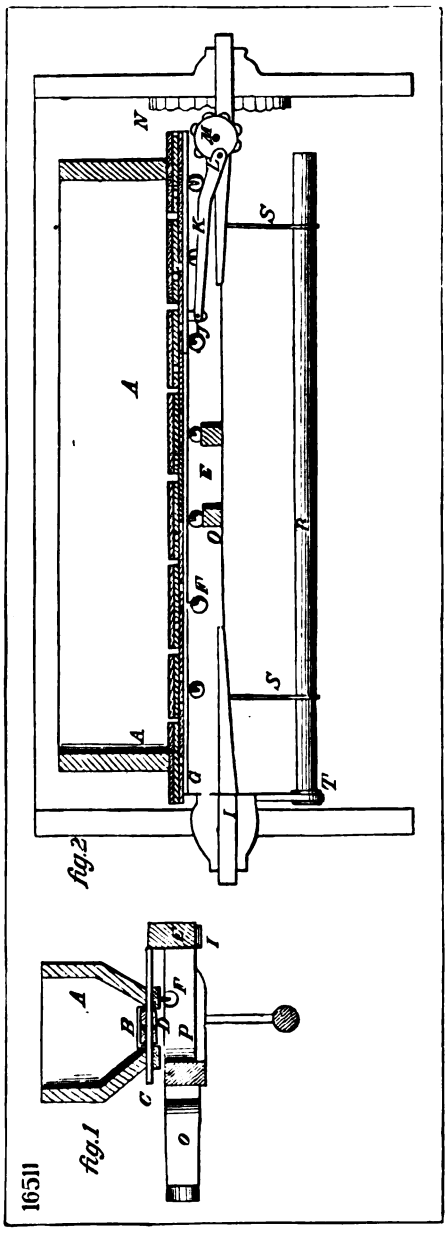
16511
fig.1
fig.2

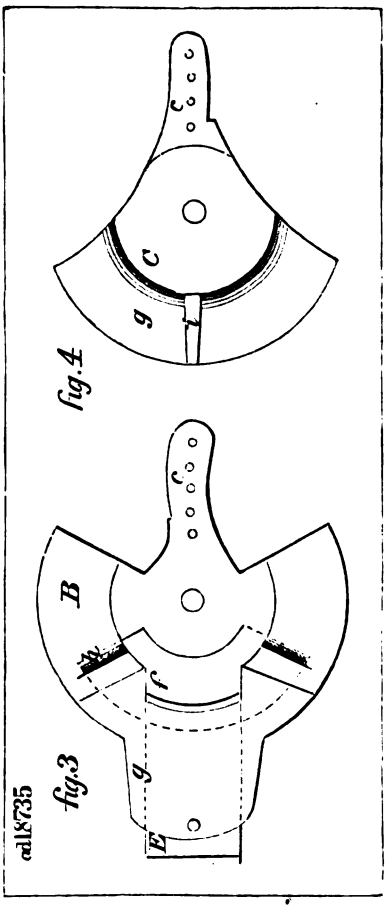
a18735
fig.3
fig.4

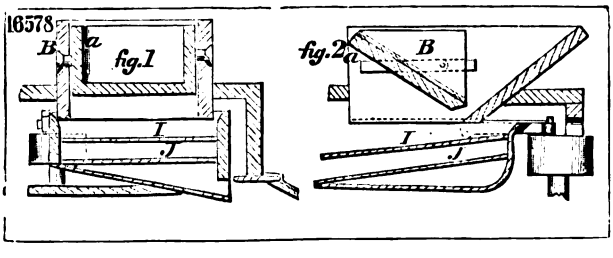
16578
fig.1
fig.2

18856

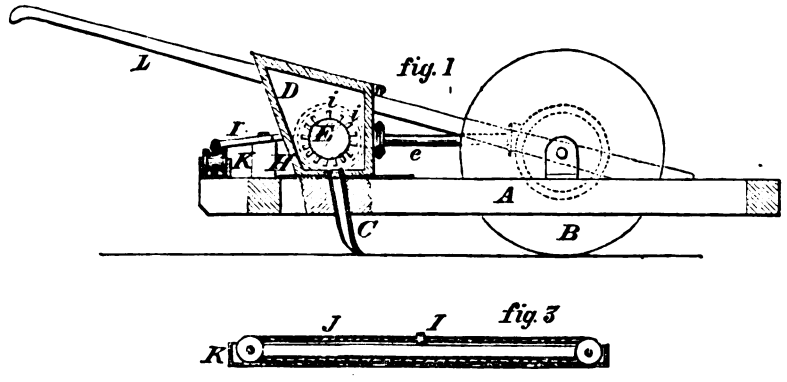

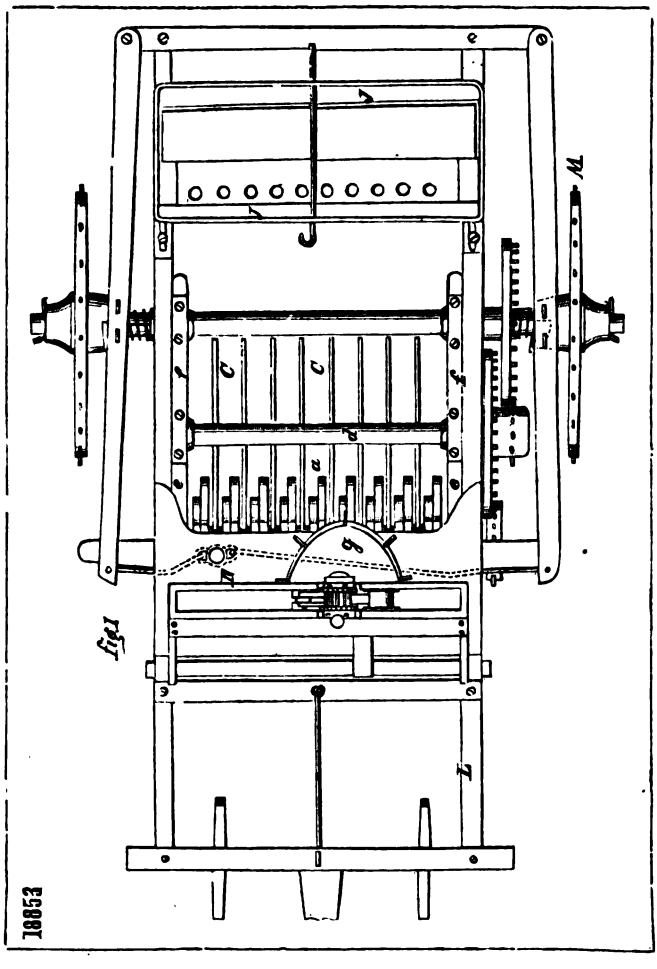

18853

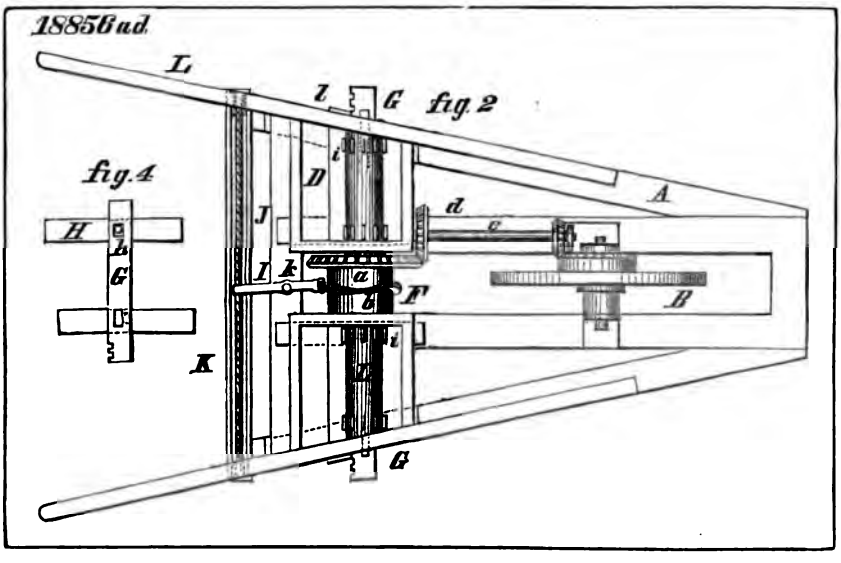
18856ad
fig. 2
fig. 4

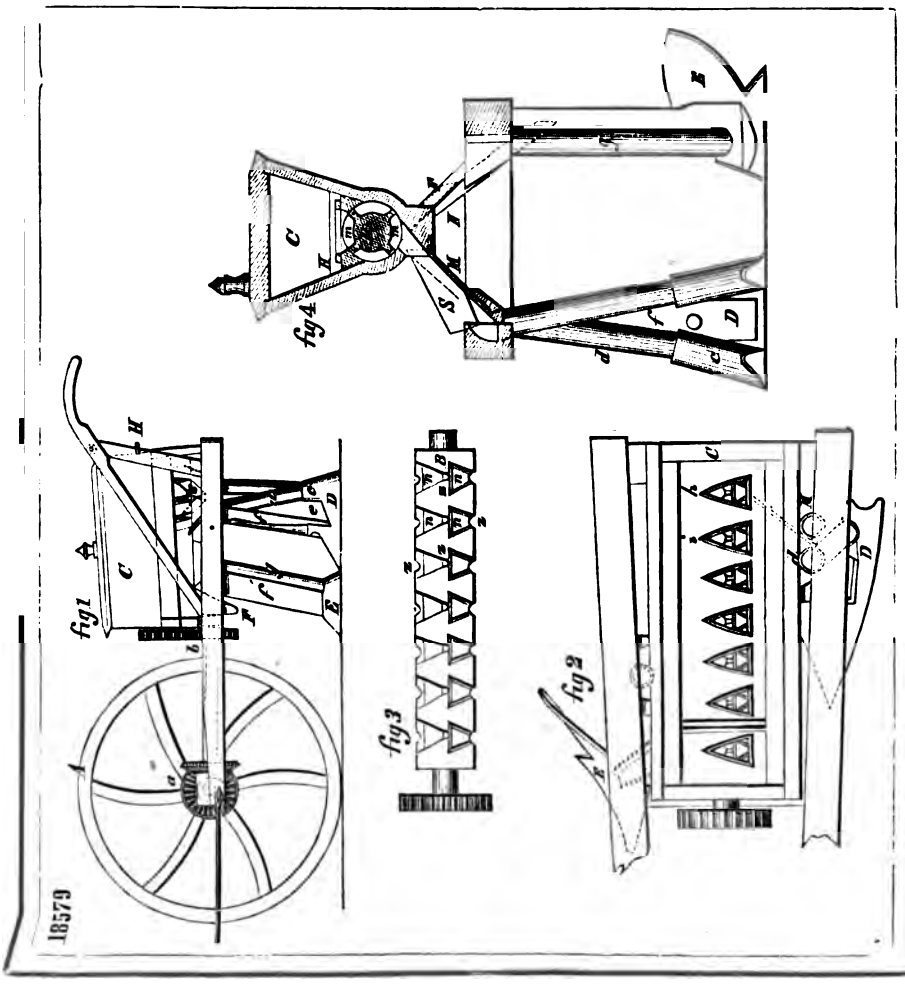
fig 1
fig 2
fig 3
fig 4
18579

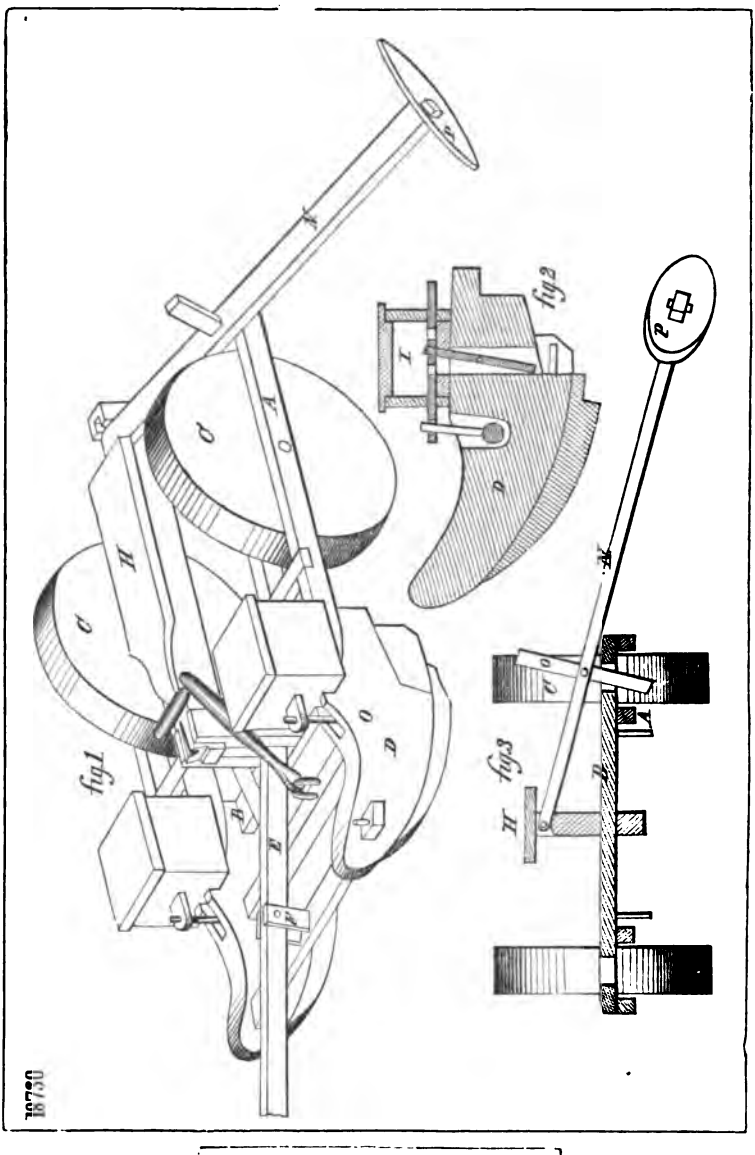
fig 1
fig 2
fig 3
fig 3

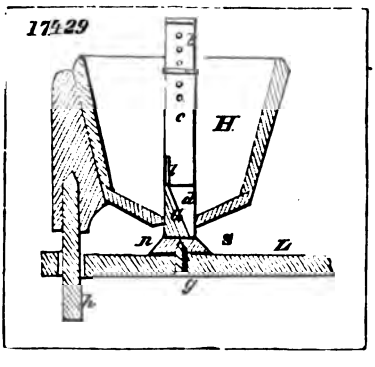
17,429
H
L

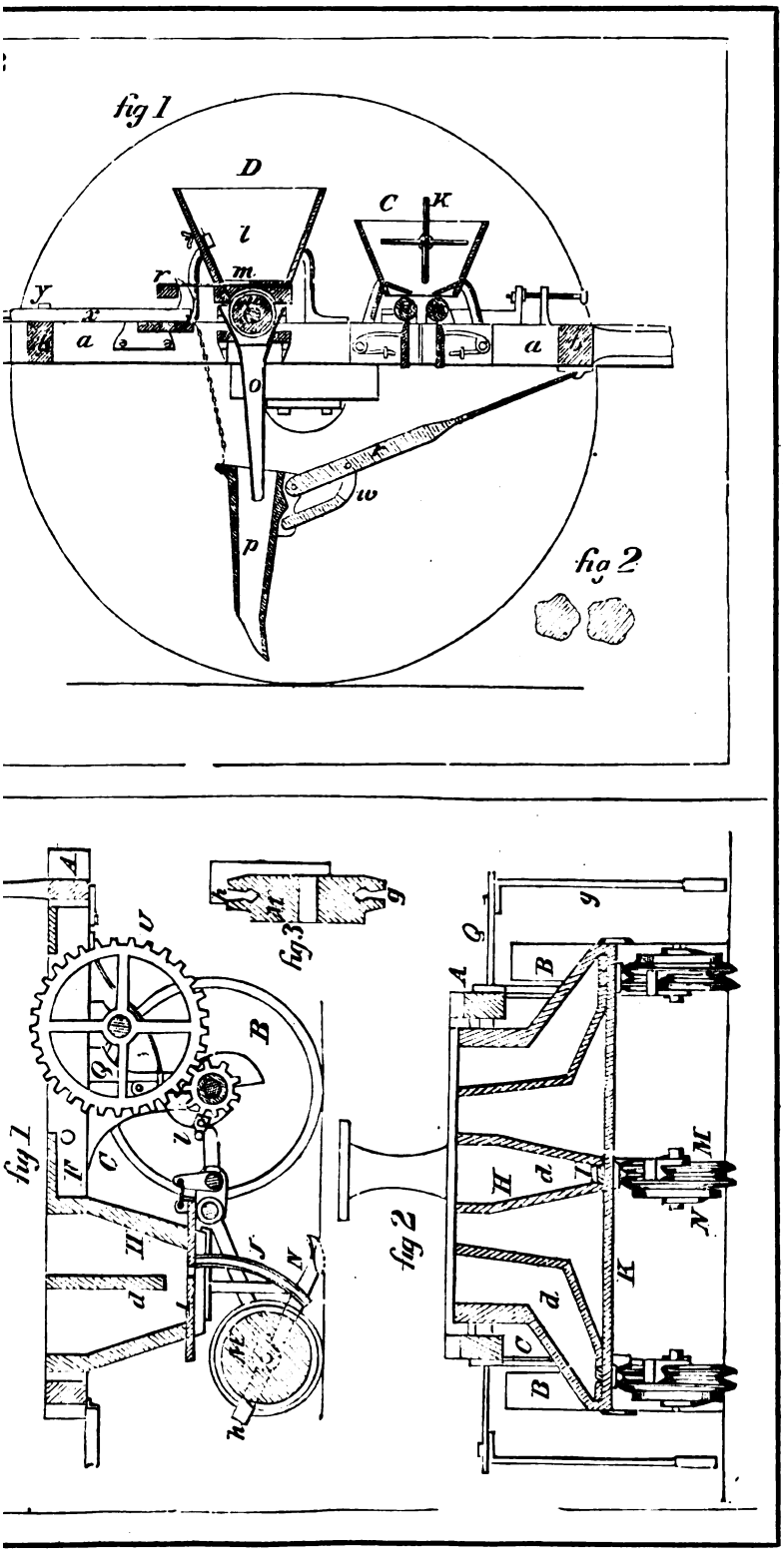
fig 1
fig 2
fig 3
fig 1
fig 2

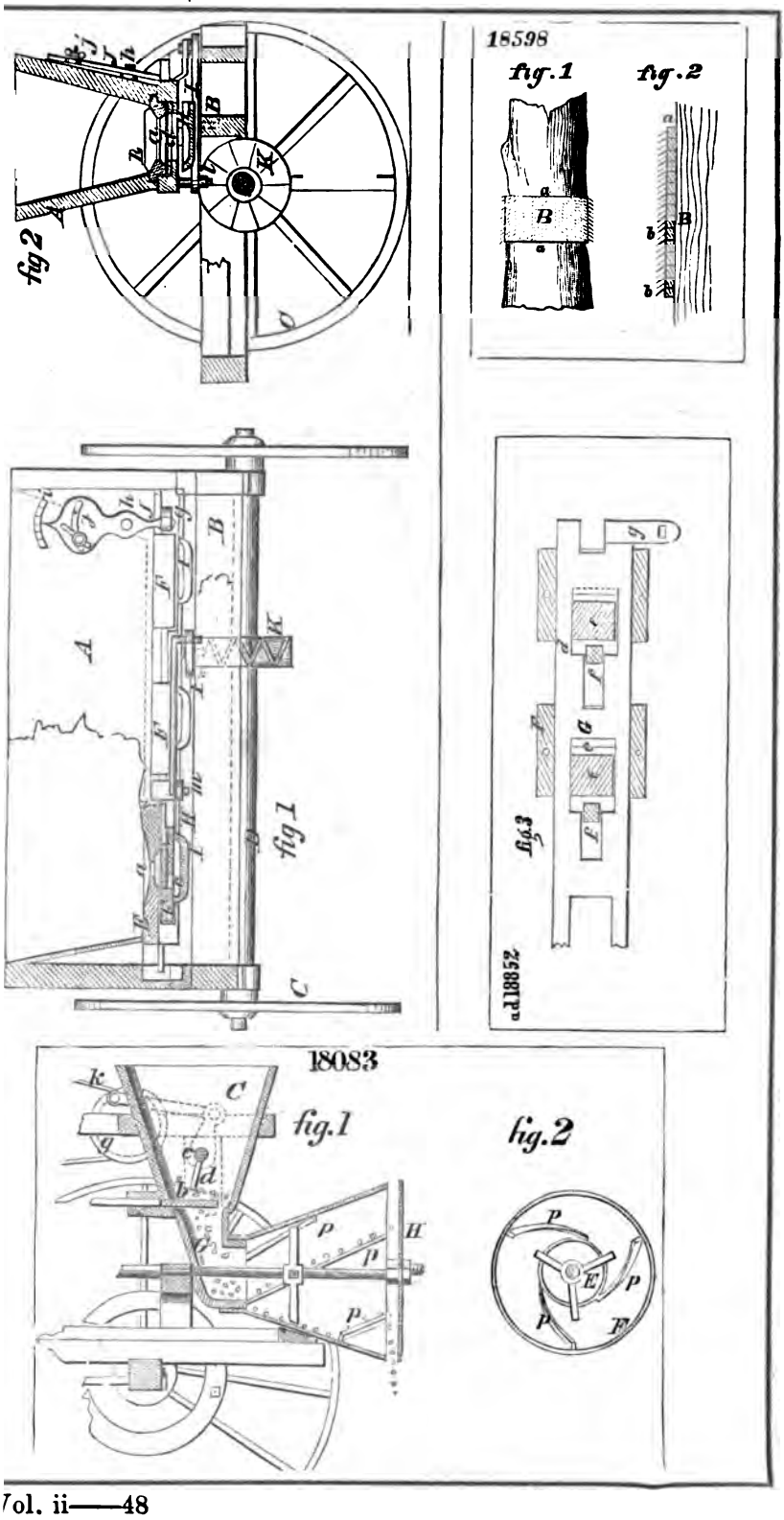
fig 2
fig 1
18598
fig.1
fig.2
fig.3
25881
18083
fig.1
fig.2

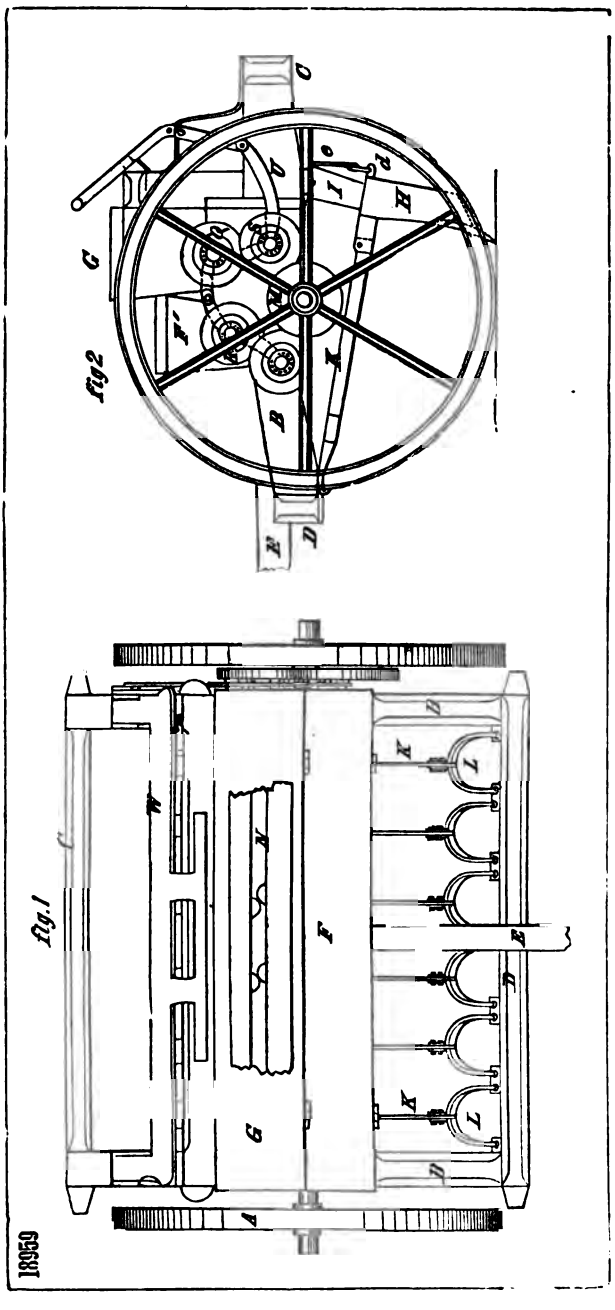

17837 fig. 1 fig. 2

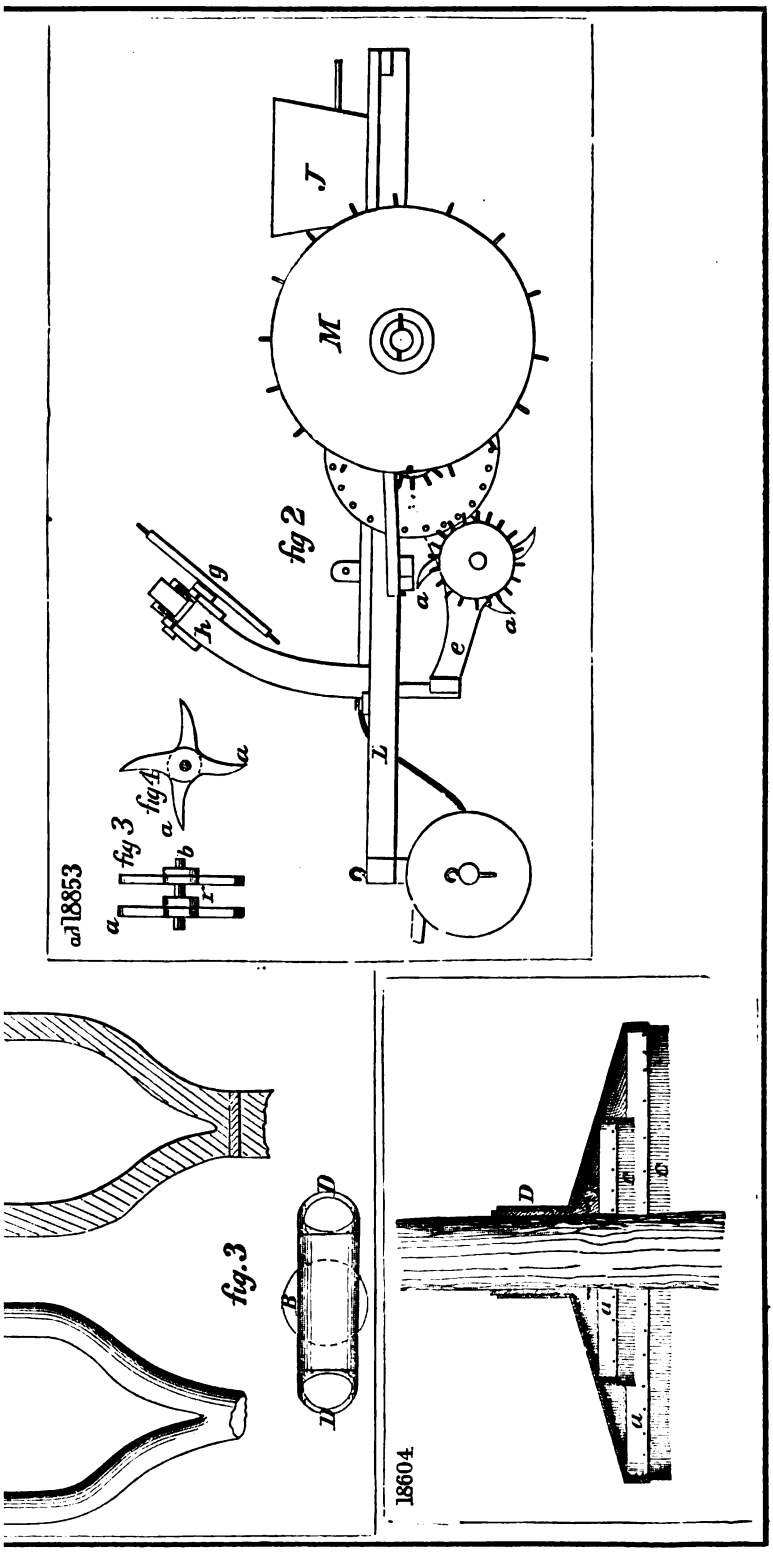
18853
fig 3
fig 4
fig 2
fig. 3
18604

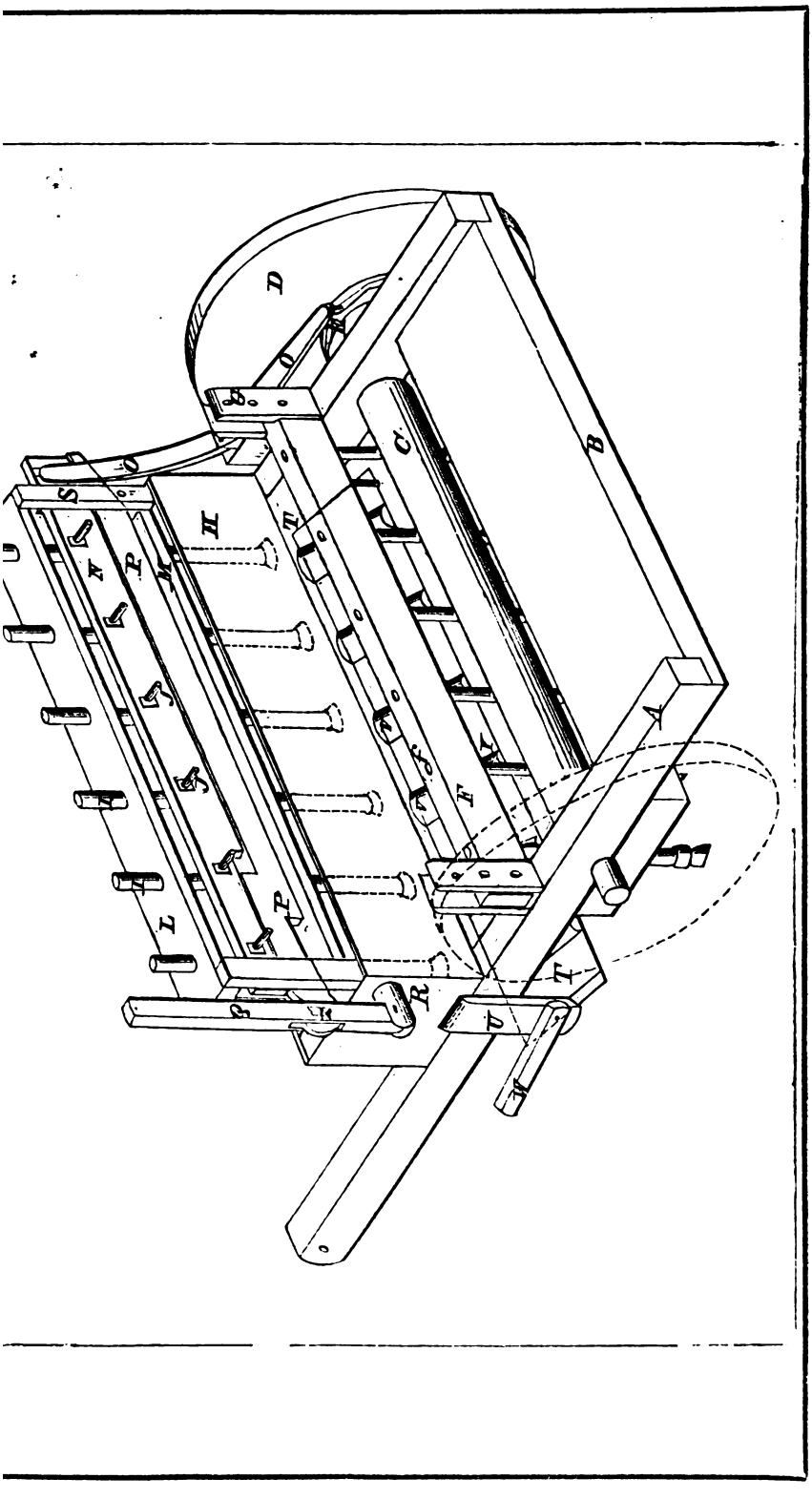

Fig. 1. No. 11,439

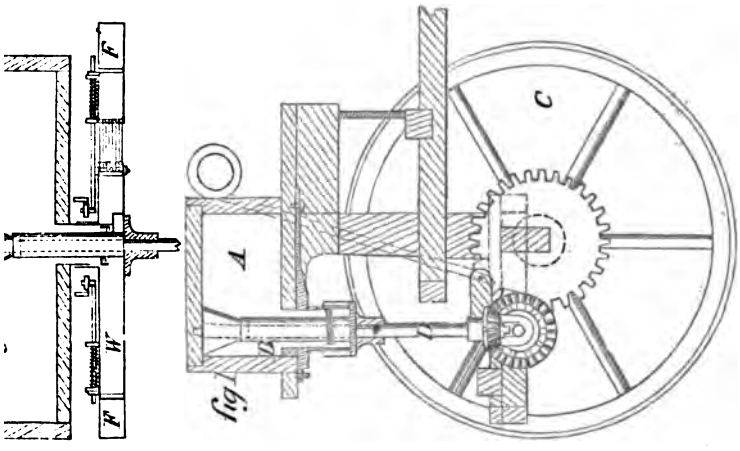
fig 1
C
V
F
W
F

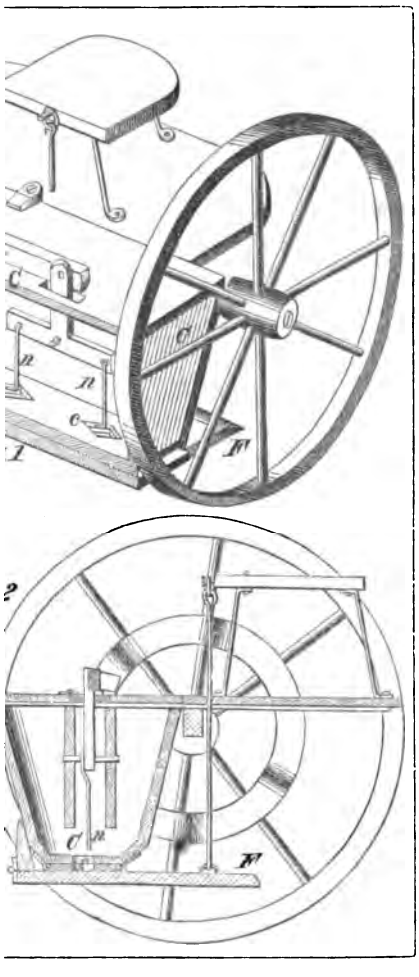
1
C
R
R
C
W
2
C
R
W

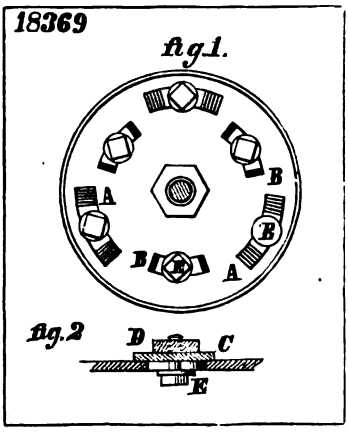
18369
fig.1.
A
B
B
B
A
fig.2
D
C
E

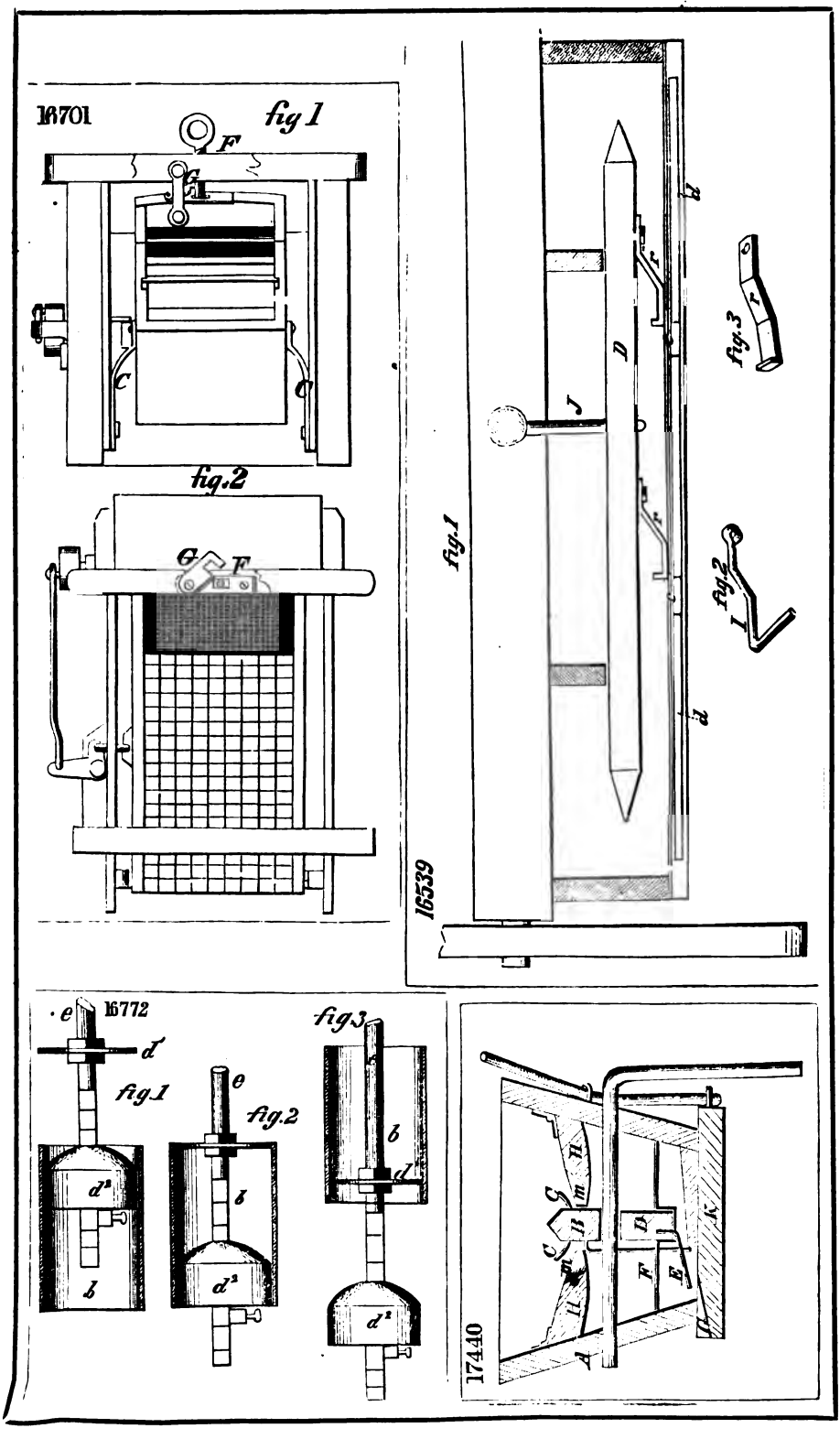
16701
fig 1
fig.2
16539
fig.1
fig.2
fig.3
16772
fig.1
fig.2
fig.3
17440

18360

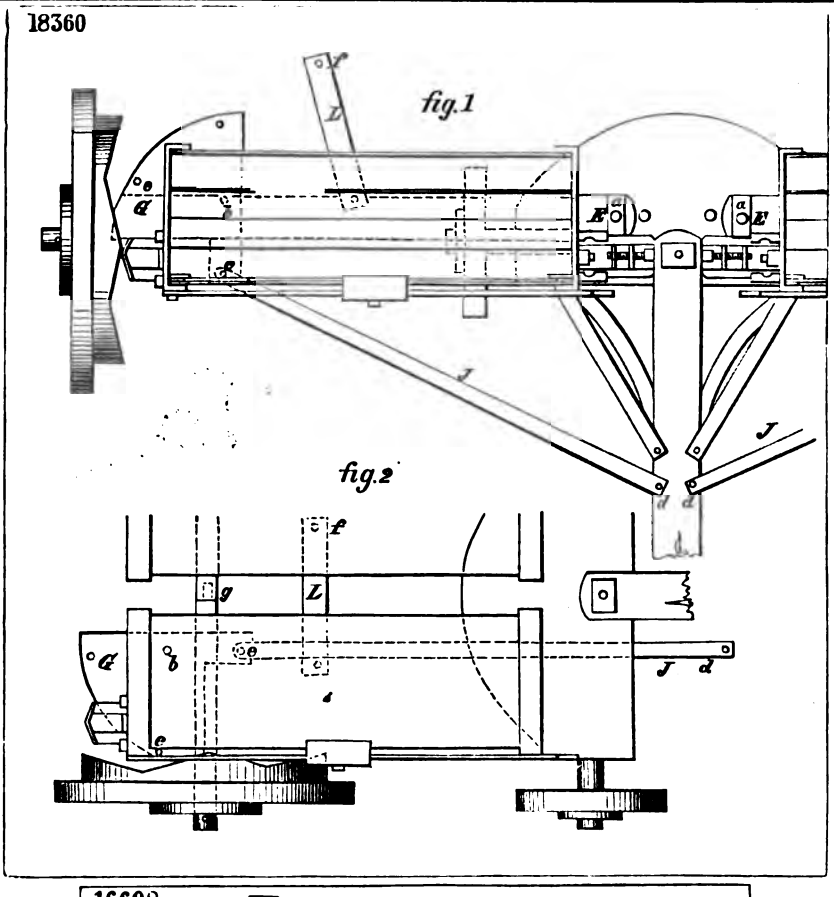

16698

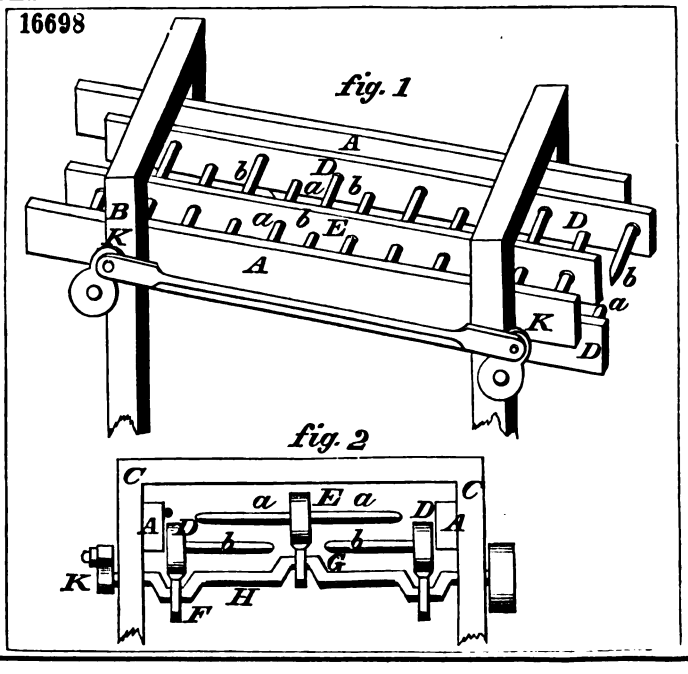

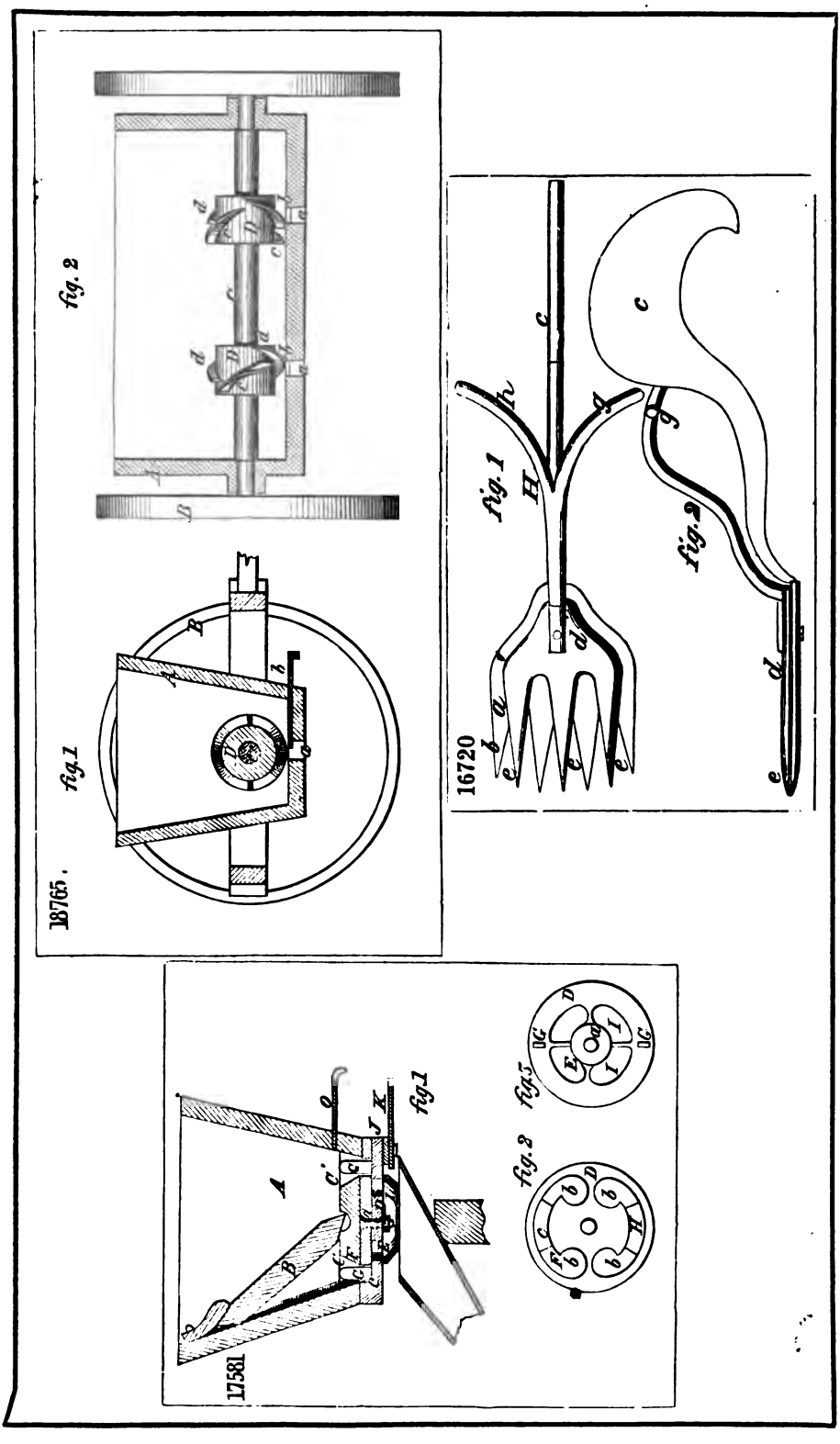
18765.
fig. 1
fig. 2
16720
fig. 1
fig. 2
17581
fig. 1
fig. 2
fig. 3

16461

fig. 1

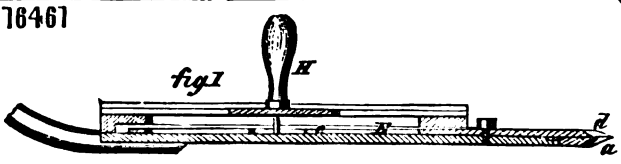

fig. 2

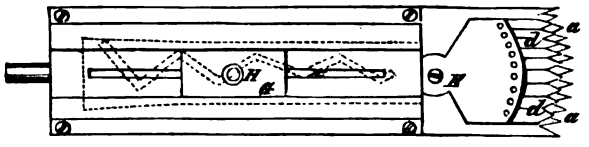

18603

fig. 1

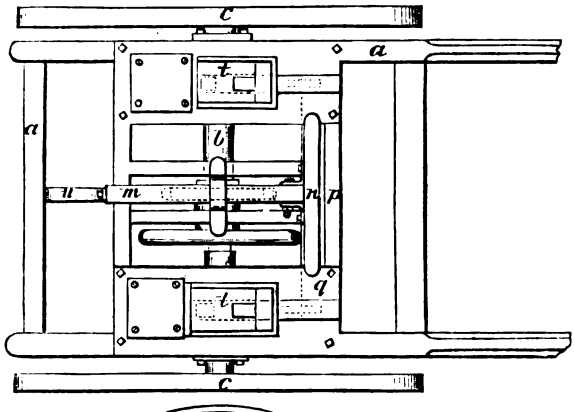

fig. 2

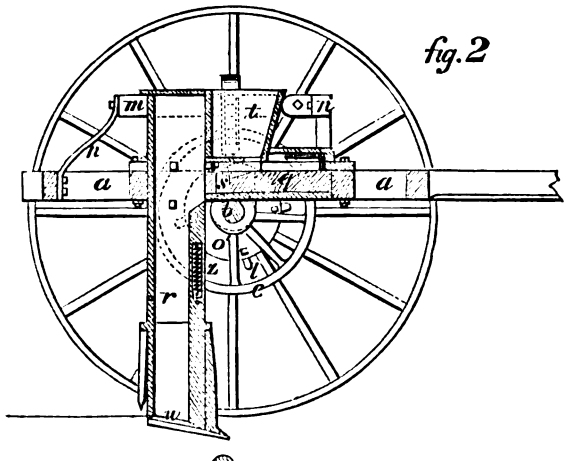

fig 3

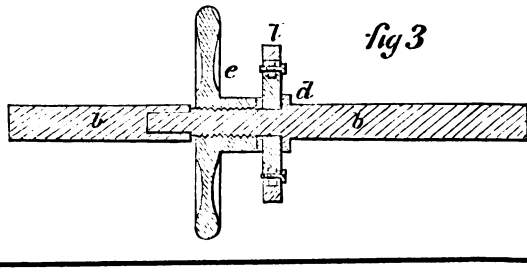

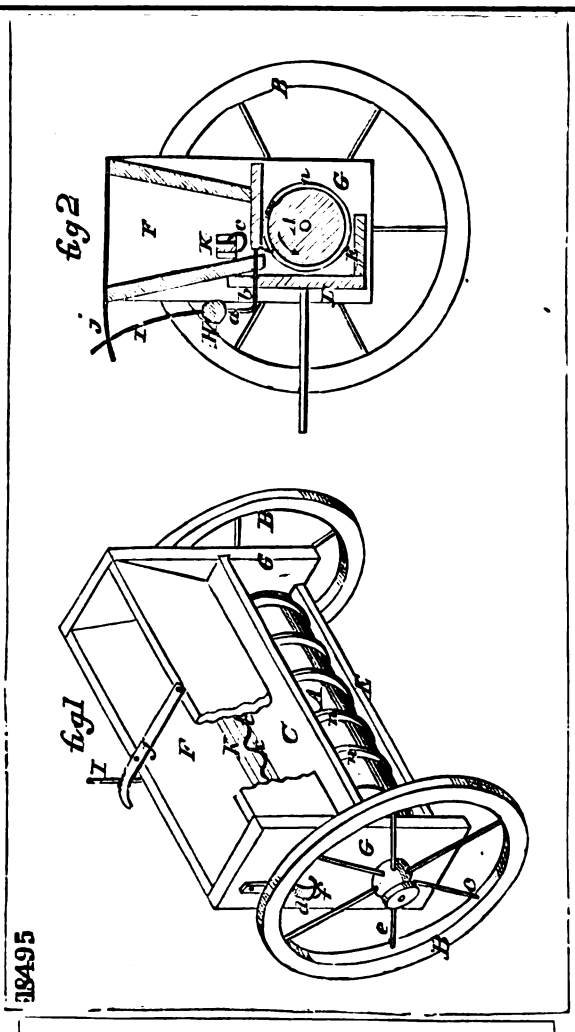
18495
fig 1
fig 2

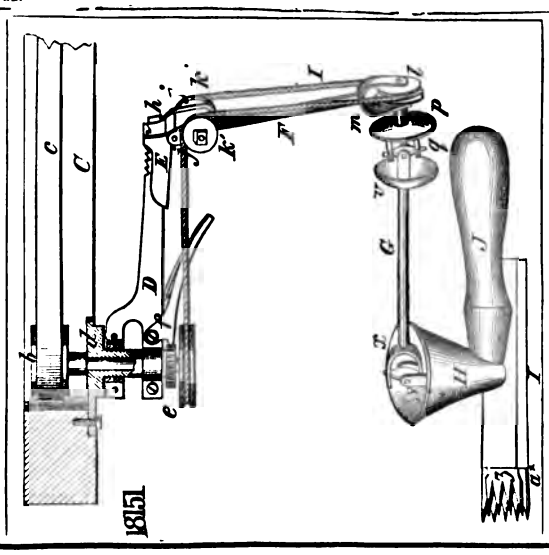
1815

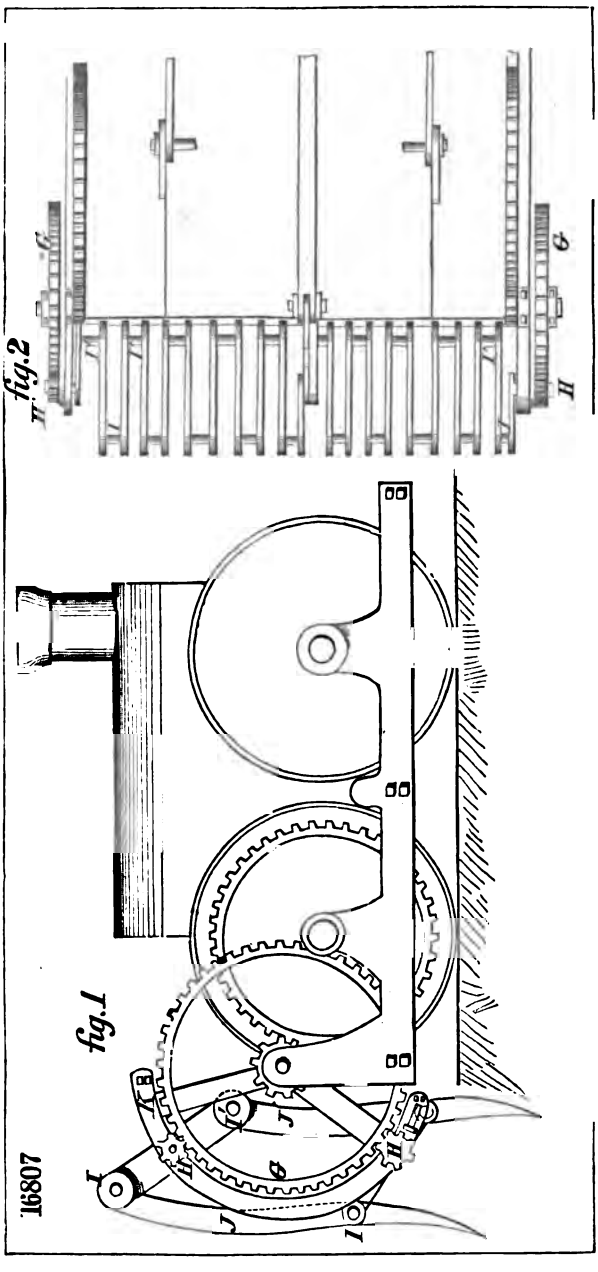
16807
fig.1
fig.2

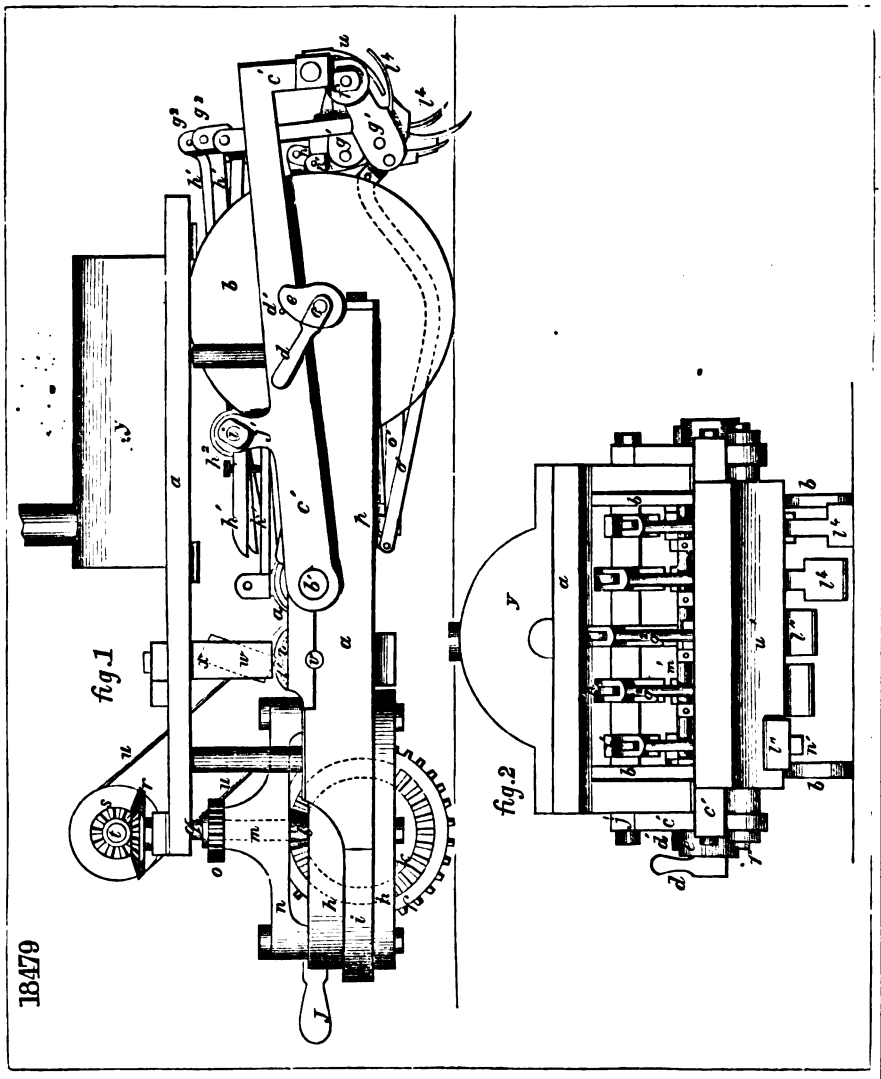
18479
fig.1
fig.2

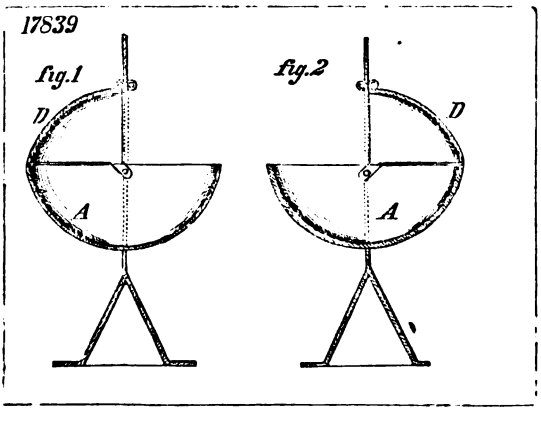
17839
fig.1
fig.2
D
A
D
A

18302

fig. 1

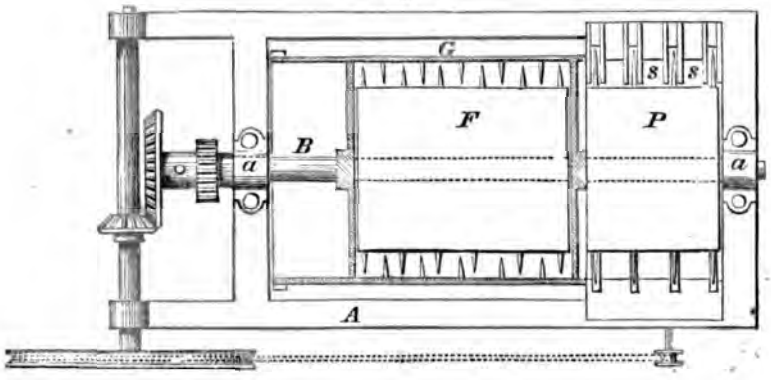

fig. 2

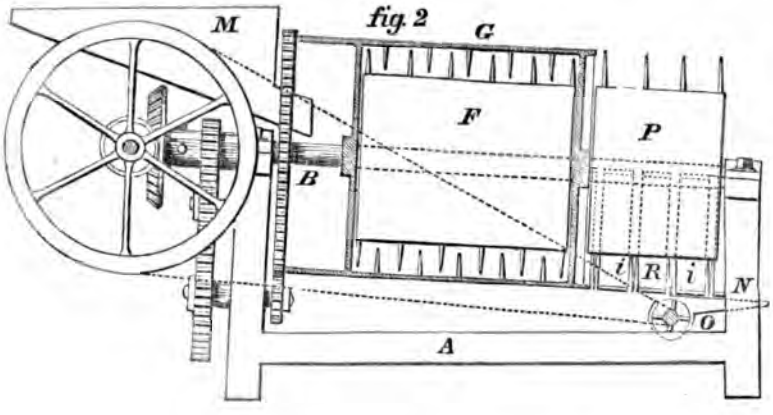

fig. 3

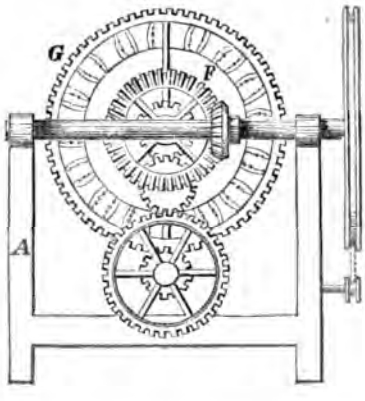

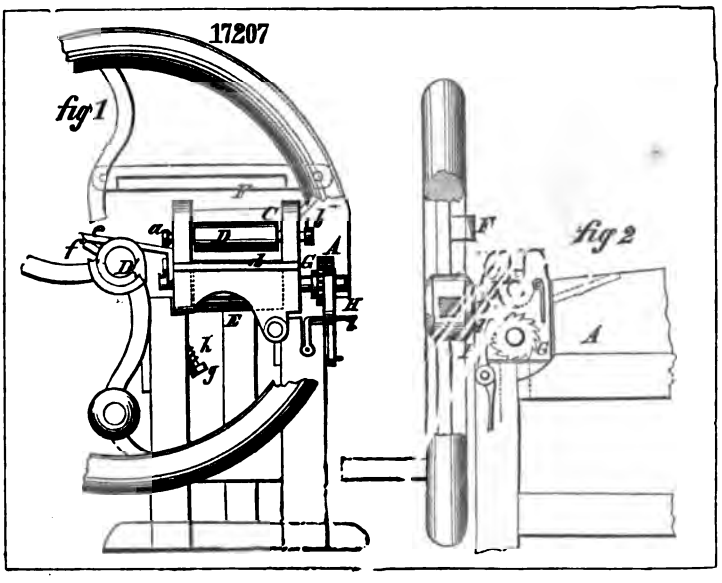
17207
fig 1
fig 2

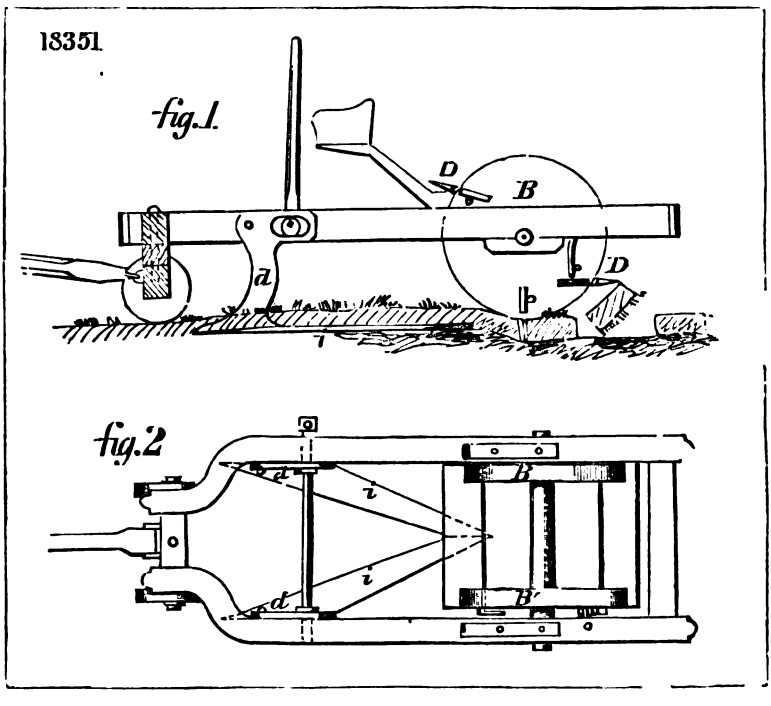
18351
fig. 1.
fig. 2

17850

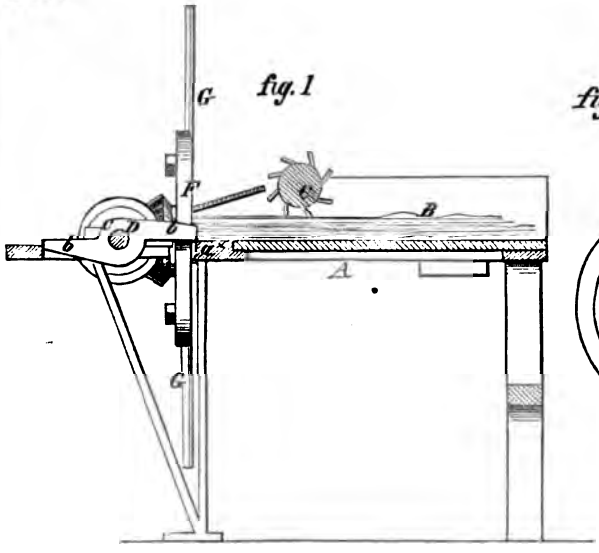

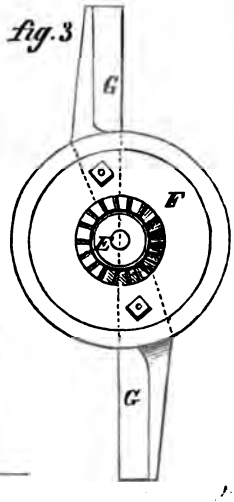

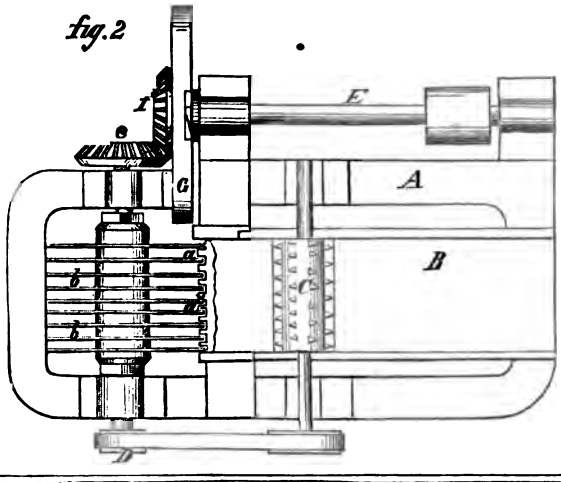

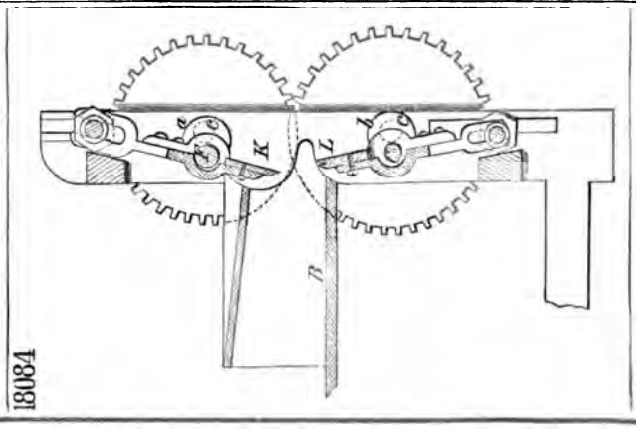

18084

fig.1.

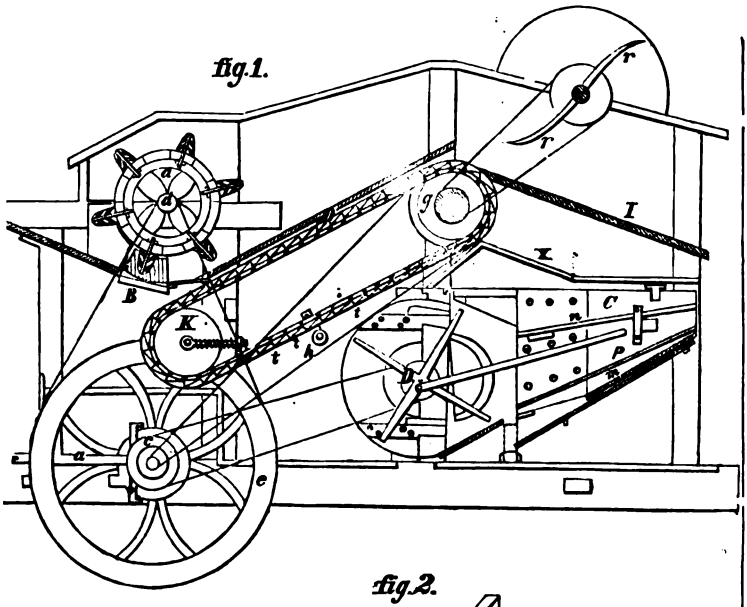

fig.2.

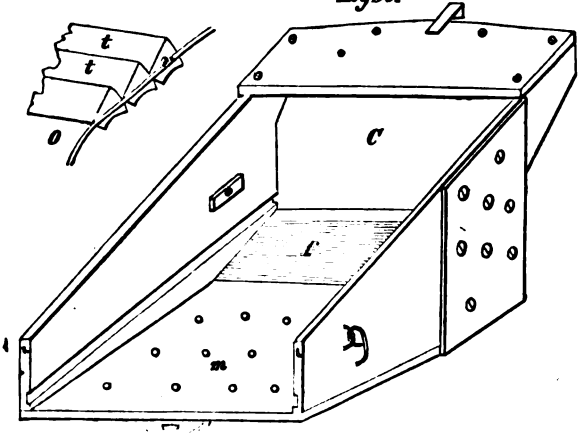

7.3.

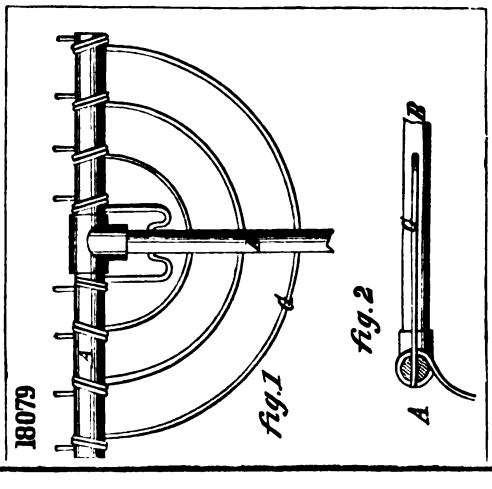

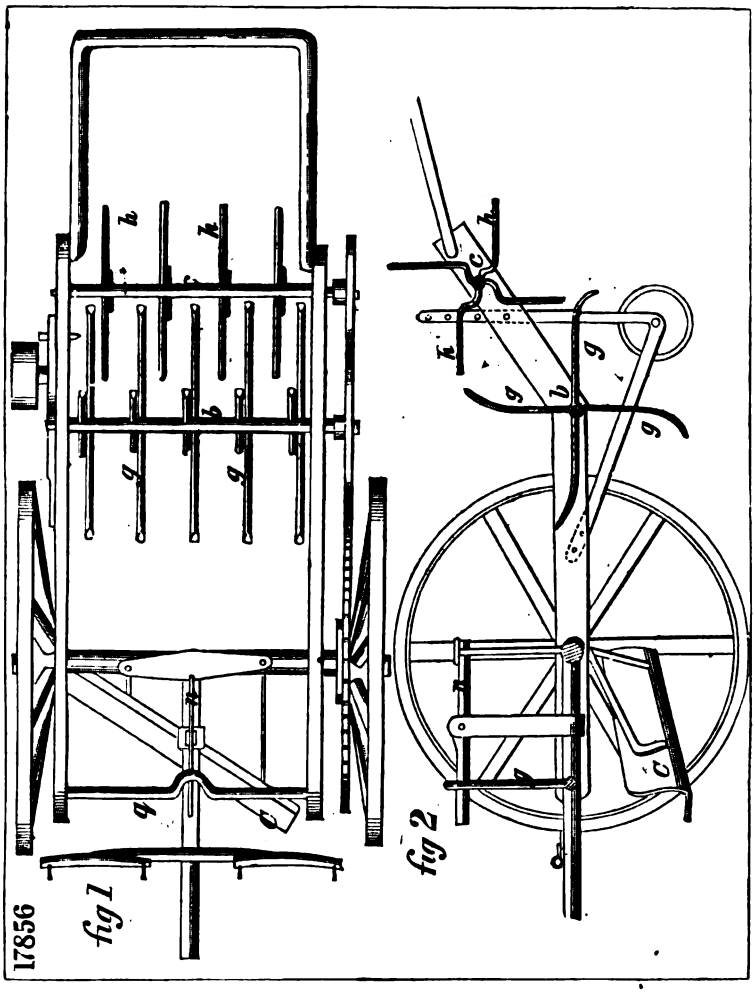
17856
fig 1
fig 2

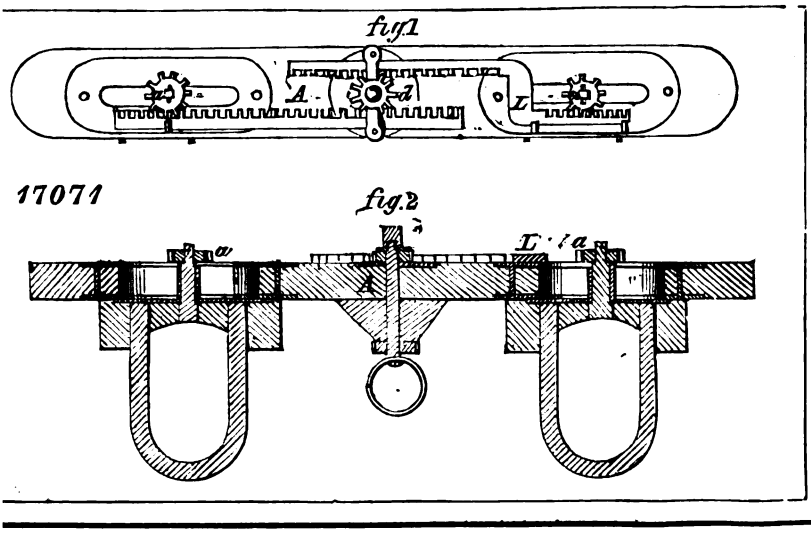
fig.1
17071
fig.2

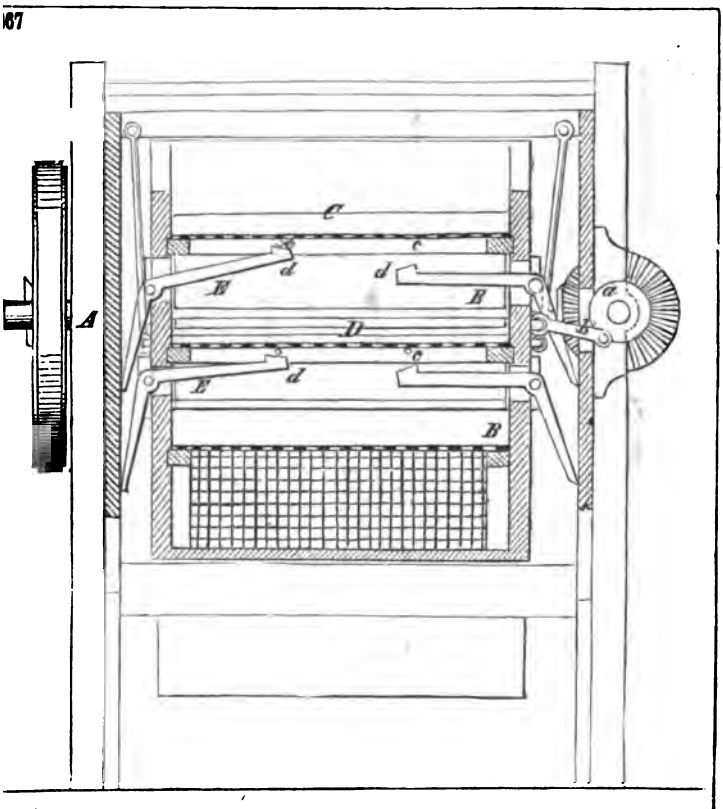
A
B
C
D
E
d

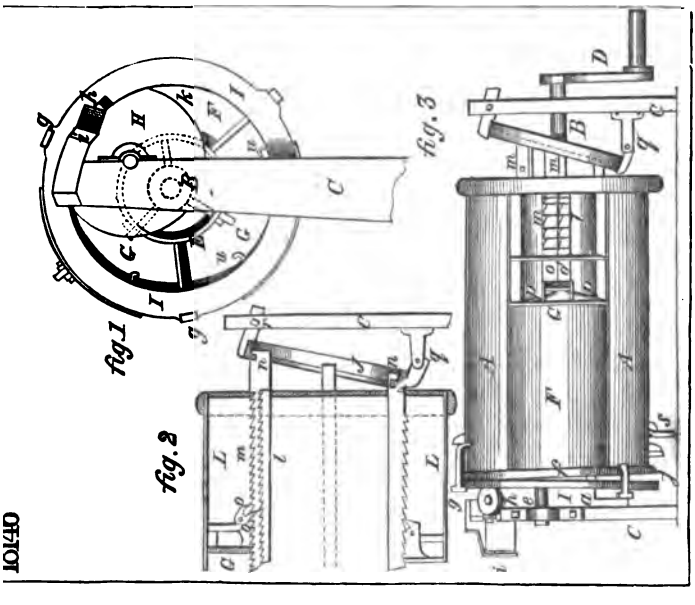
fig. 1
fig. 2
fig. 3

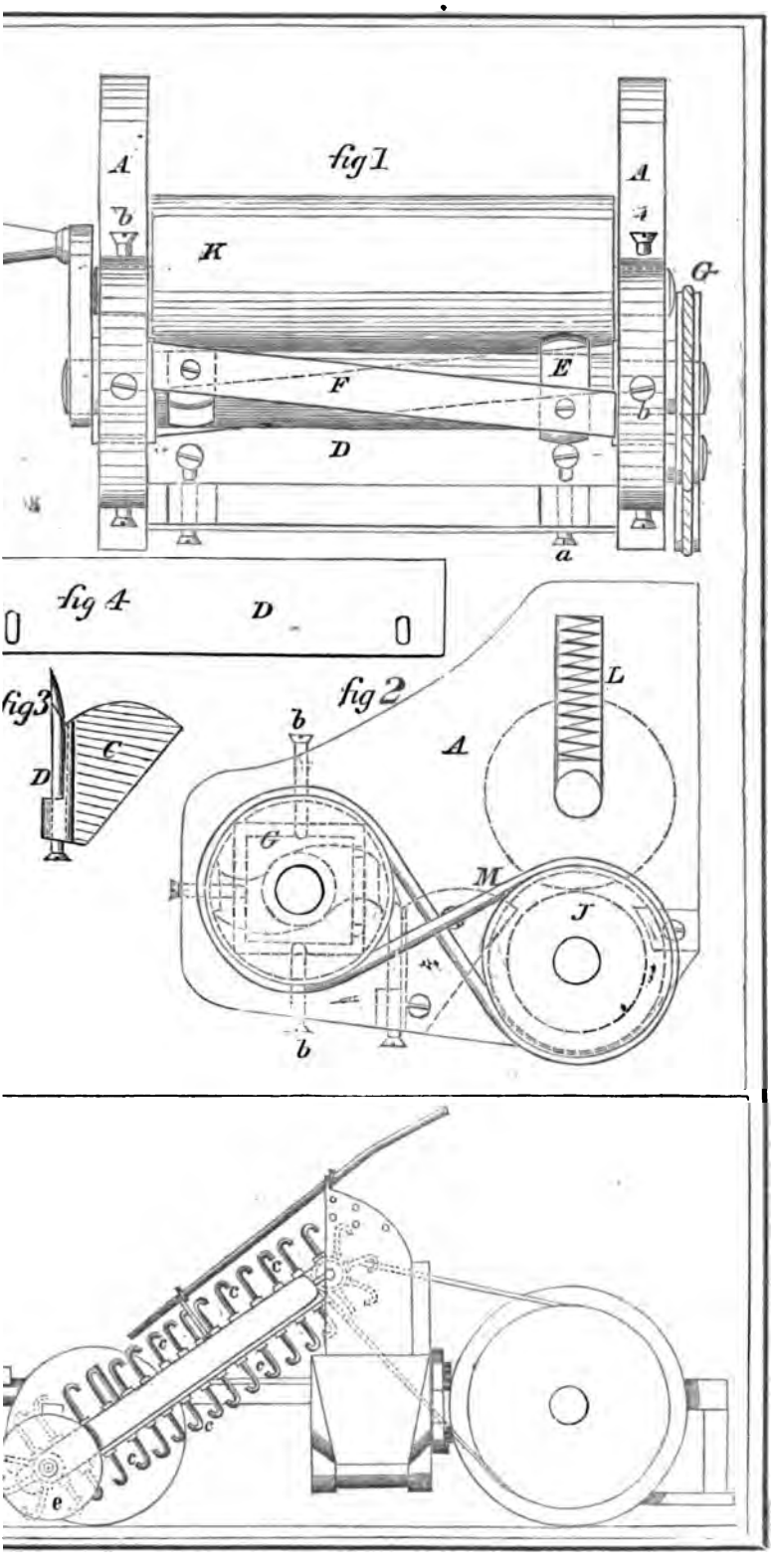
fig 1
A
A
b
b
K
G
E
F
D
a
fig 4
D
fig 3
C
D
fig 2
b
A
L
G
M
J
b
e

16447

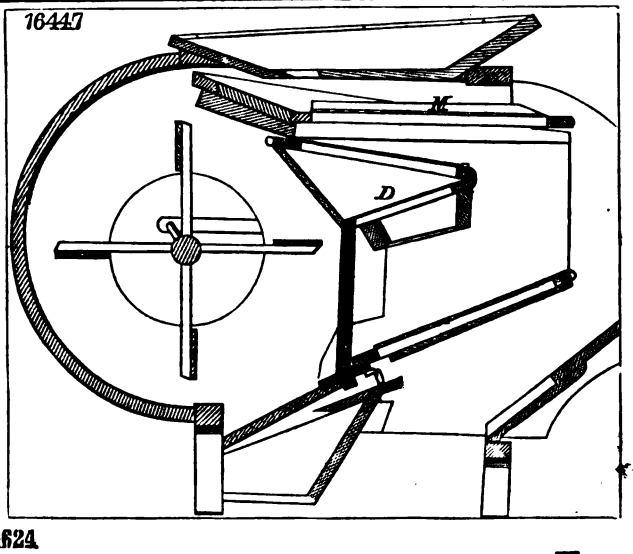

18624

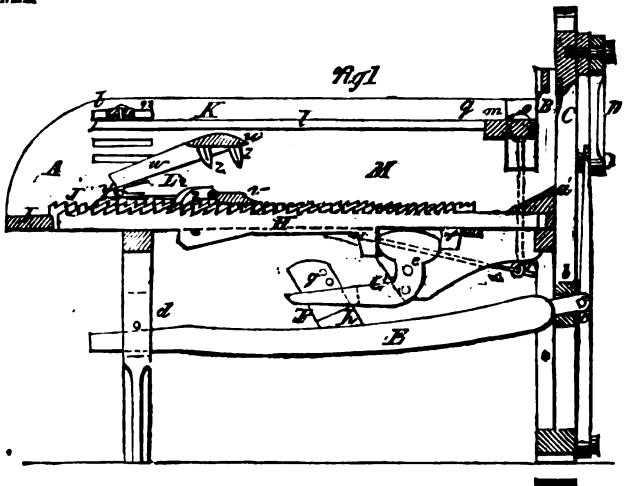

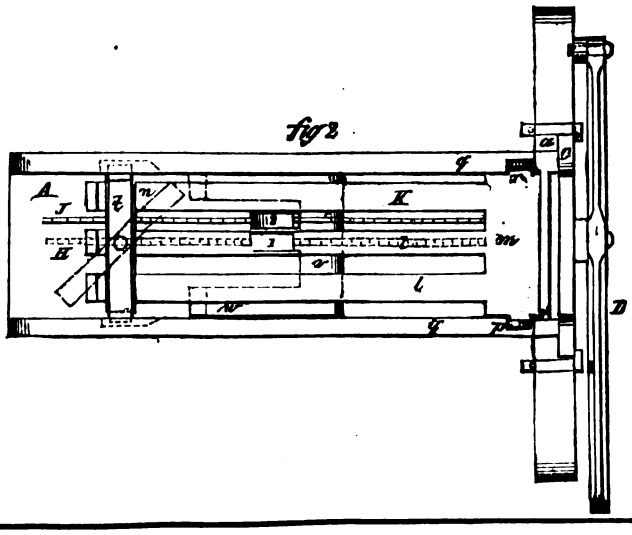

18946

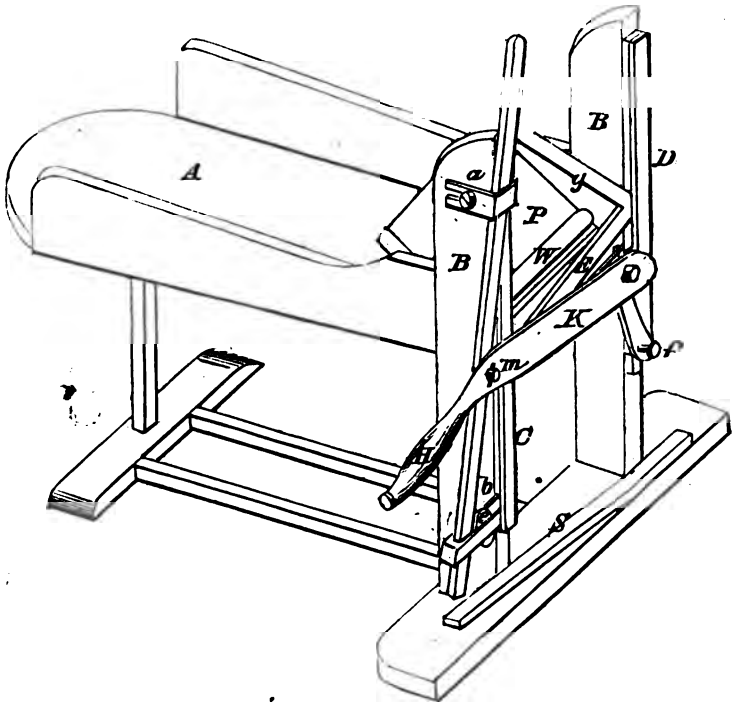

18436

fig.2

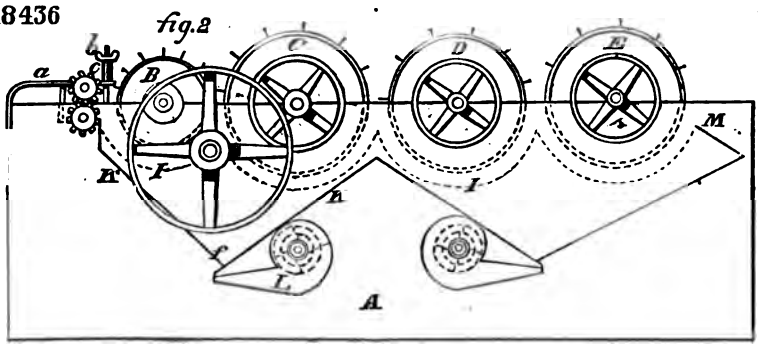

fig.1

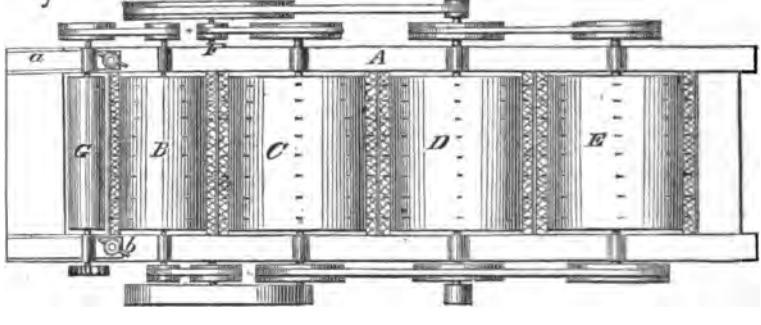

FOR USE IN LIBRARY BUILDING ONLY
DO NOT REMOVE